DWG NO	SH	REV

REVISIONS

REV	DESCRIPTION	DATE	APPROVED

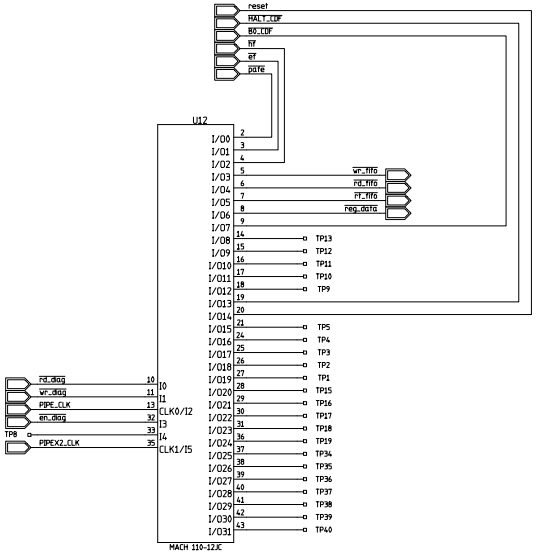

CDF UPGRADE ELECTRONICS	Fermi National Accelerator Lab
	ADMEM - PreProduction Diagnostic Data Sequencer
Theresa M. Shaw	SIZE D / FSMC NO / DWG NO TMS-ADMEM-041597-P5A / REV A
RD/EED/EES	SCALE / SHEET 1 of 1

E:\JOBS_ADMEM\Analog_Admem\Analog_Admem\vbdc\admem_pre_prod.sbk!DIAG_SEQ1(38;16) Mon Jul 20 14:38:49 1998