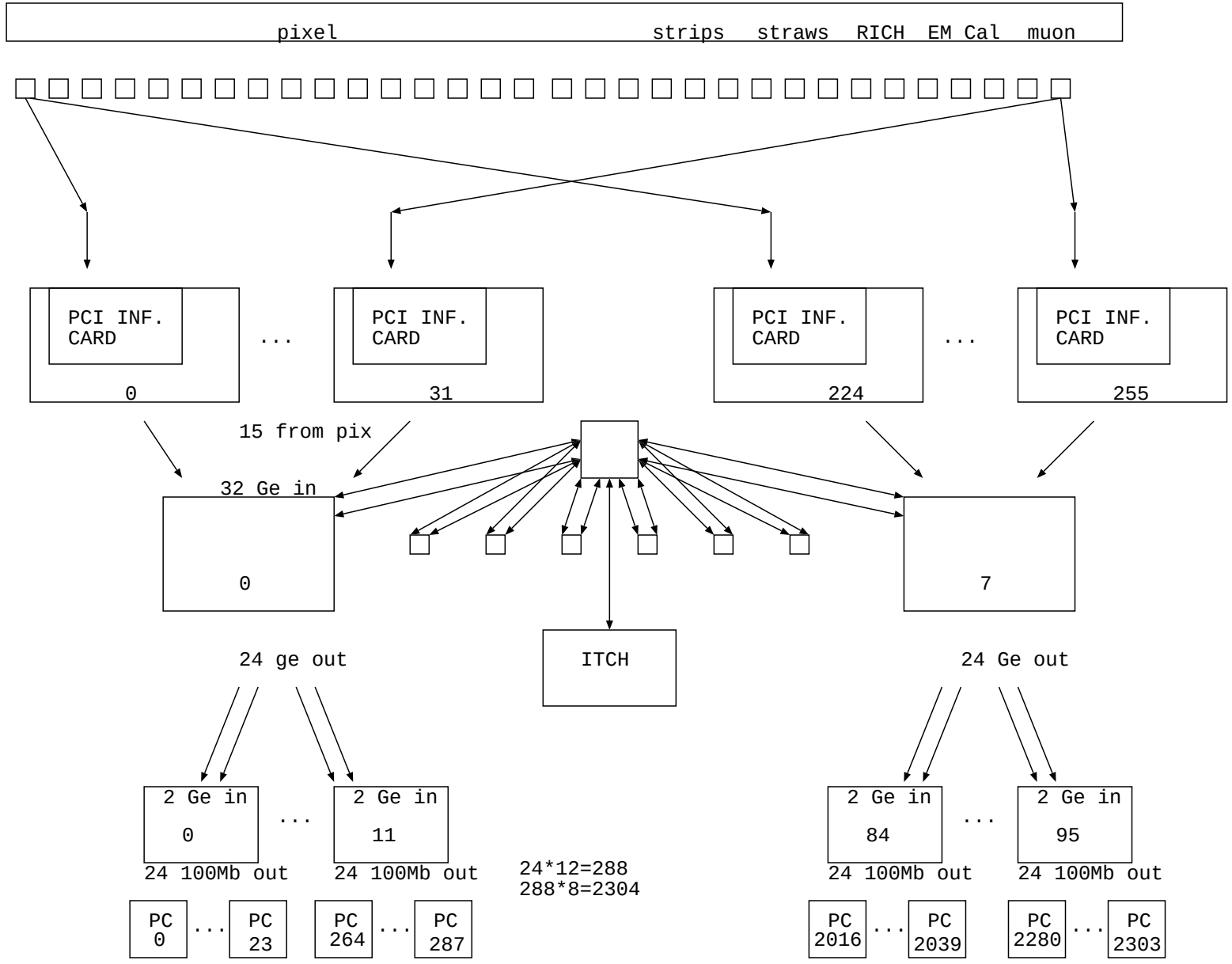

typical:
112MB/port:
256 to 1
Recall: max win size
is min of (max) send buf
and (max) recv buf;
Set send buf to buffer 2 or 3 event frements.
Set recv buf (per port) to protect switch buffer overflow:
(112MB/blade) / (14 output ports/blade???) / 256 connections = 32KB

Each of the receiving nodes (1 of 2304) has a connection to each of the 256 sending nodes.
Each of the sending nodes (1 of 256) has a connection to each of the 2304 receivgin nodes.

http://www-d0.fnal.gov/cgi-bin/cvsweb.cgi/~checkout~/l3xsbc/doc/buffering/index.html?rev=HEAD&content-type=text/html