CDF FDDI LAN

(November 94)

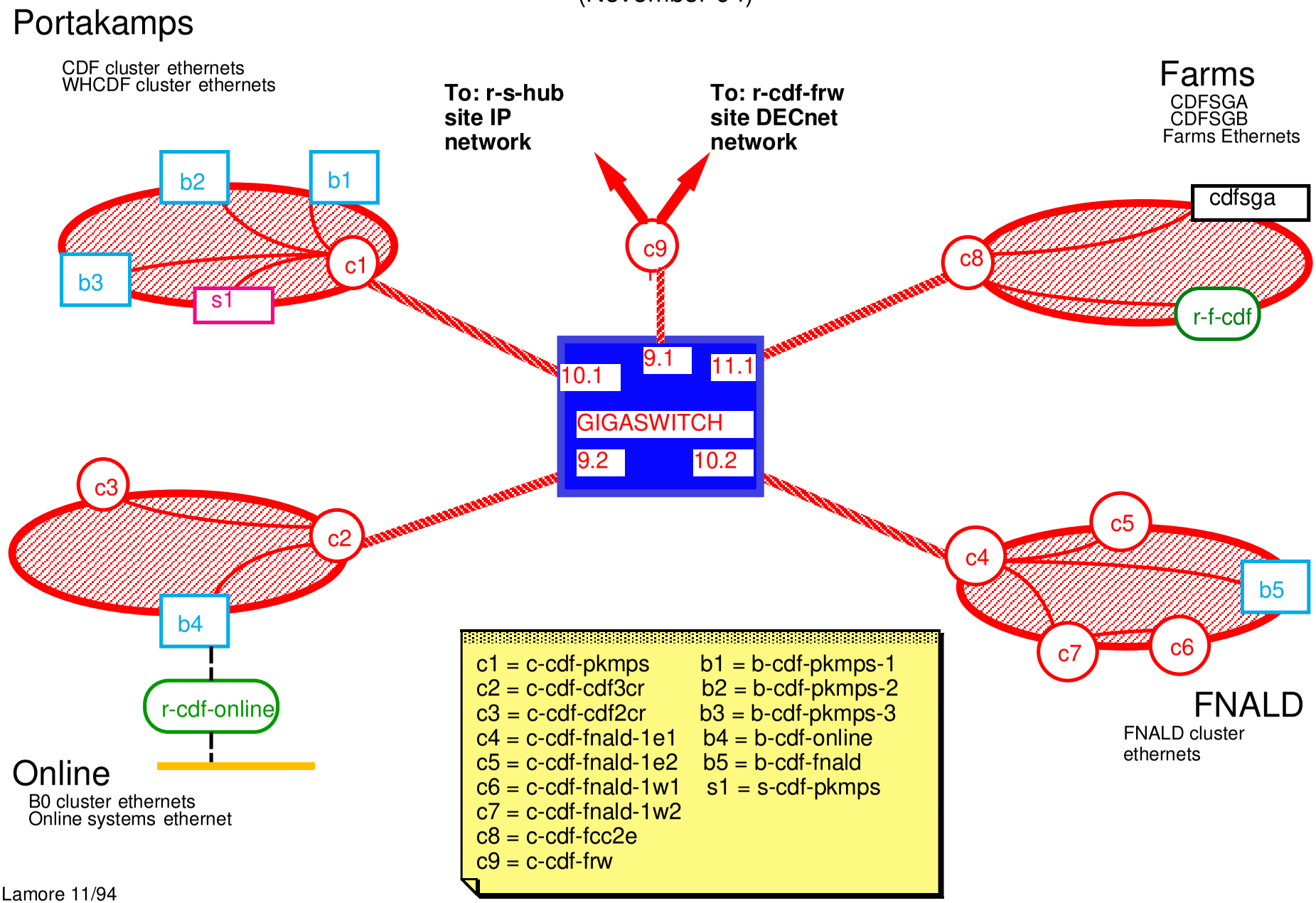

c1 = c-cdf-pkmps	b1 = b-cdf-pkmps-1
c2 = c-cdf-cdf3cr	b2 = b-cdf-pkmps-2
c3 = c-cdf-cdf2cr	b3 = b-cdf-pkmps-3
c4 = c-cdf-fnald-1e1	b4 = b-cdf-online
c5 = c-cdf-fnald-1e2	b5 = b-cdf-fnald
c6 = c-cdf-fnald-1w1	s1 = s-cdf-pkmps
c7 = c-cdf-fnald-1w2	
c8 = c-cdf-fcc2e	
c9 = c-cdf-frw	

D. Lamore 11/94