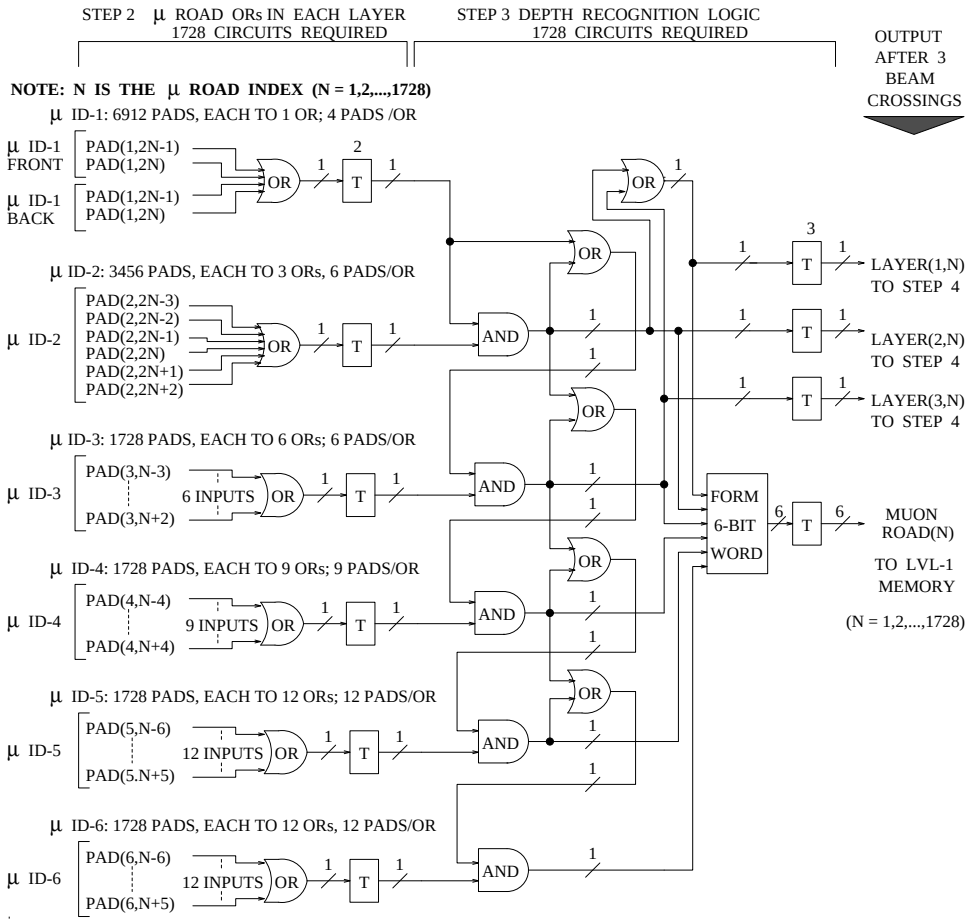MUON ID LVL-1 TRIGGER LOGIC STEPS (18-OCT-1993)