DWG NO	SH	REV

REVISIONS

REV	DESCRIPTION	DATE	APPROVED

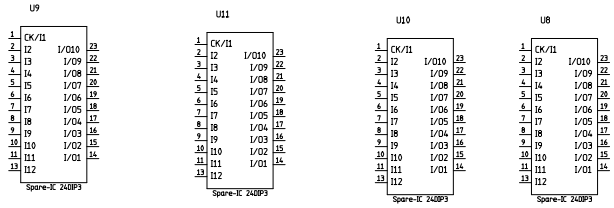

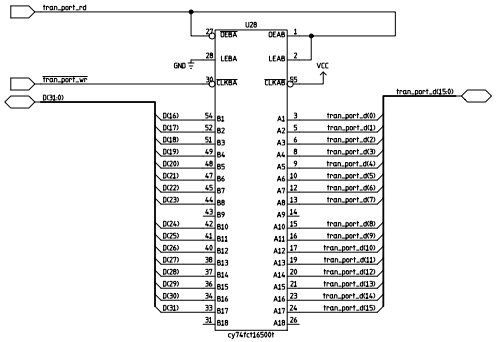

CDF UPGRADE ELECTRONICS	Fermi National Accelerator Lab
	ADMEM - Production_V4 Analog Channel Select Register Spares
Theresa M. Shaw	SIZE D · FSHC NO · DWG NO TMS-ADMEM-021999-P24 · REV A
RD/EED/EES	SCALE · SHEET 24 OF 25