REVISIONS

SYMBOL	DESCRIPTION	DATE	APPROVAL
—	Initial Release	1/27/94	
A	RN A064 Incorporated	3/23/94	
B	Incorporated Elmwood Sensors "J" Configuration of 3200 Thermostat; entire document reformatted.	11/17/97	
C	RN A123 Incorporated.	11/06/01	VP

SHEET REVISION STATUS

SH	1	2	3	4	5	6	7	8	9	10	11	12	13	14	15	16	17	18	19	20
REV	C	C	B	B	B	B	B	C												
SH	21	22	23	24	25	26	27	28	29	30	31	32	33	34	35	36	37	38	39	40
REV																				

ORIGINATOR: **T. R. Duffy/Unisys**	**DATE** **12/14/93**	**FSC:**
APPROVED: **S. Archer-Davies/Unisys**	**12/14/93**	**Switch, Thermostatic, (Bimetallic), Subminiature Sealed, Single Pole, Single Throw (SPST), Detail Specification for**
CODE 311 APPROVAL: **P. J. Jones/GSFC**		
CODE 311 SUPERVISORY APPROVAL: **G. Kramer/GSFC**		
ADDITIONAL APPROVAL:		**S-311-641/01**

NATIONAL AERONAUTICS AND SPACE ADMINISTRATION
GODDARD SPACE FLIGHT CENTER
GREENBELT, MARYLAND 20771

CAGE CODE: 25306

GSFC DETAIL SPECIFICATION

SWITCHES, THERMOSTATIC, (BIMETALLIC), SUBMINIATURE, HEREMETICALLY SEALED, SINGLE POLE, SINGLE THROW (SPST)

The requirements for procuring the thermostatic switches described herein shall consist of this specification and the current revision of GSFC S-311-641.

PART NUMBER:

G311P641/01	A	-30	B	099	C
GSFC PREFIX	Configuration	Low Temp.	Contact Action	High Temp.	Set Point Features

(standard for switches listed in this detail specification).

Configuration: See figure 1.

NOTE: All temperatures are in °F.

Low Temperature: The low temperature operating point (°F) shall be designated by 3 digits. For negative temperatures, the first digit shall be a minus (-).

Contact Action: Operating characteristics of the part.

- A Open on increasing temperature.
- B Open on decreasing temperature.
- C Close on increasing temperature.
- D Close on decreasing temperature.

High Temperature: The high temperature operating point (°F) shall be designated by 3 digits. For negative temperatures, the first digit shall be a minus (-).

Set Point Features: Special features for set points.

- A Set points are min-max.
- B Opening set point is min or max.
  Closing set point is standard tolerance.
- C Closing set point is min or max.
  Opening set point is standard tolerance.
- D Opening set point is ±5°F with 7°F to 18°F differential. Closing set point is min or max possible.
- E Closing set point is ±5°F with 7°F to 18°F differential. Opening set point is min or max possible.
- F Opening set point is standard tolerance.
  Closing set point is standard tolerance.

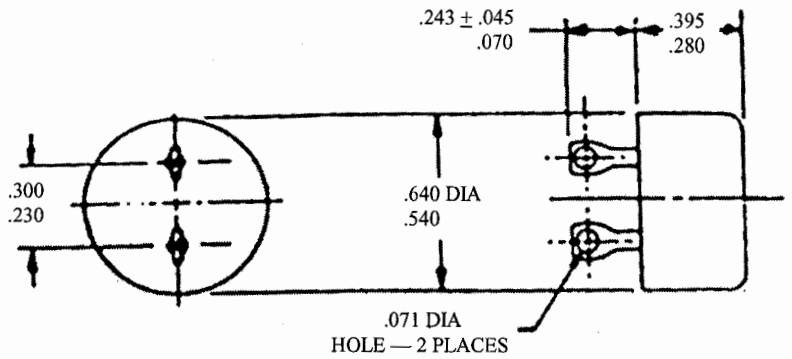

CONFIGURATION A

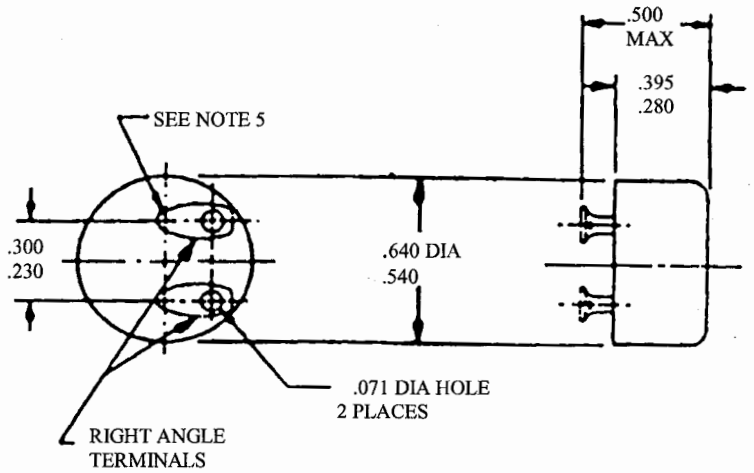

CONFIGURATION B

Figure 1. Dimensions.

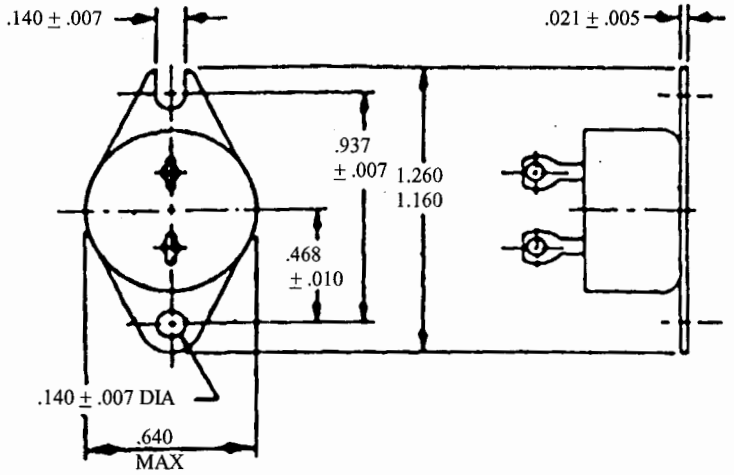

CONFIGURATION C

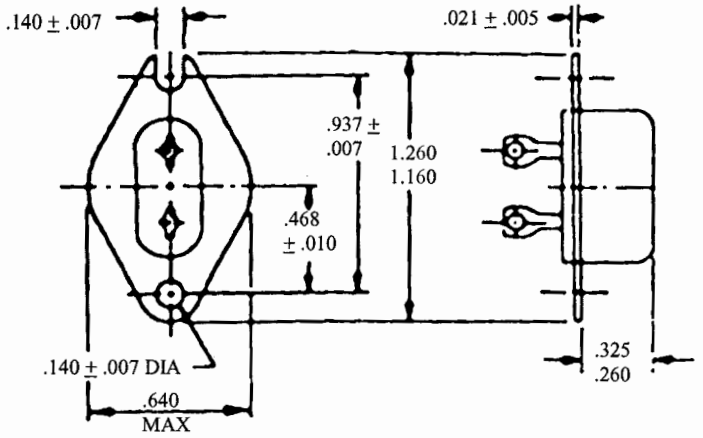

CONFIGURATION D

Figure 1. Dimensions. (continued)

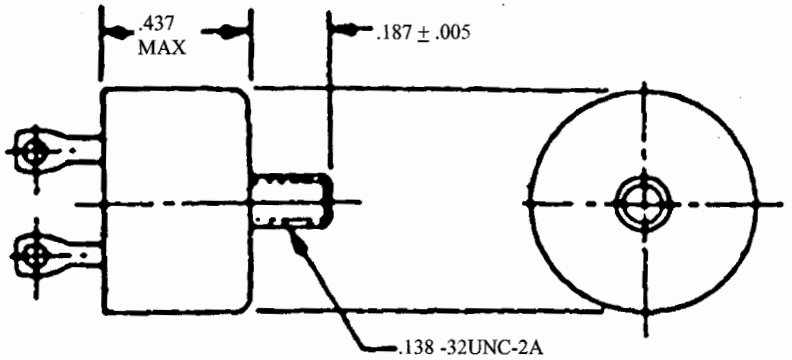

CONFIGURATION E

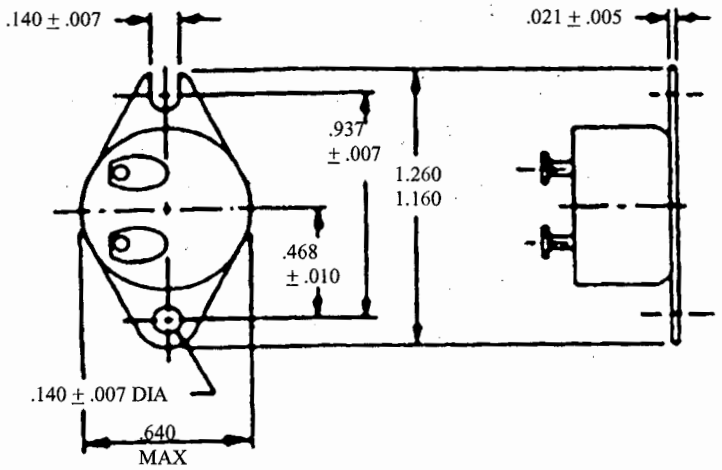

CONFIGURATION F

Figure 1. Dimensions. (continued)

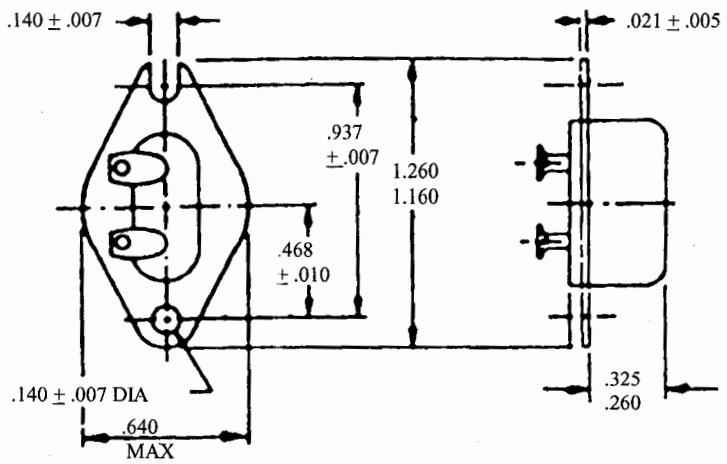

CONFIGURATION G

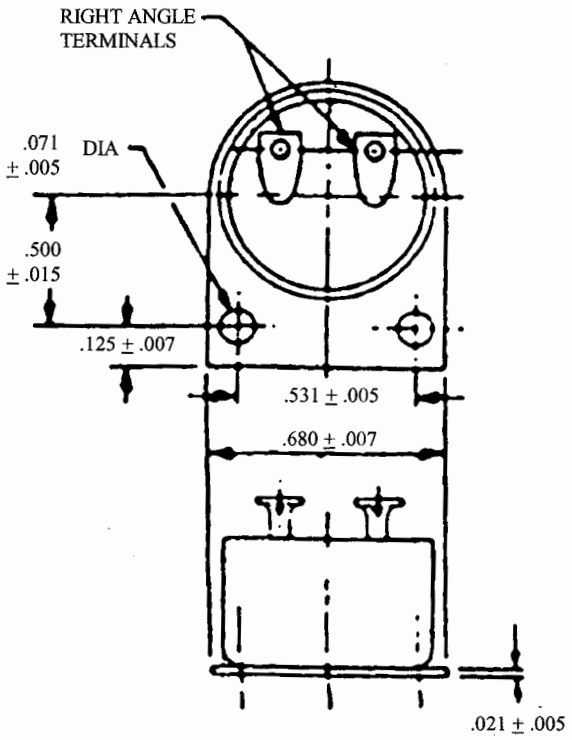

CONFIGURATION H

Figure 1. Dimensions. (continued)

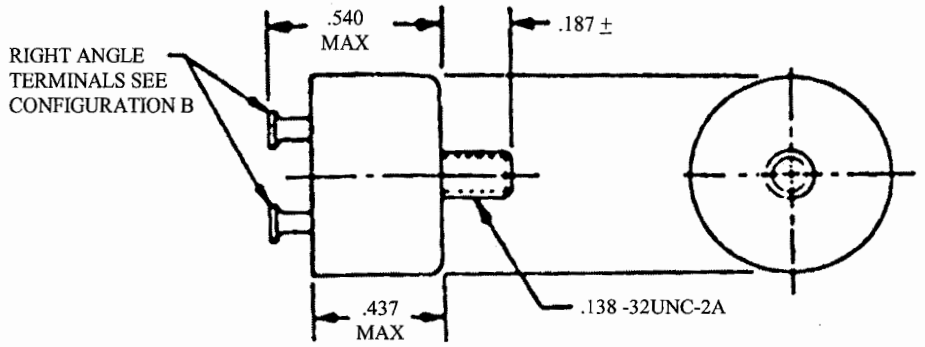

CONFIGURATION I

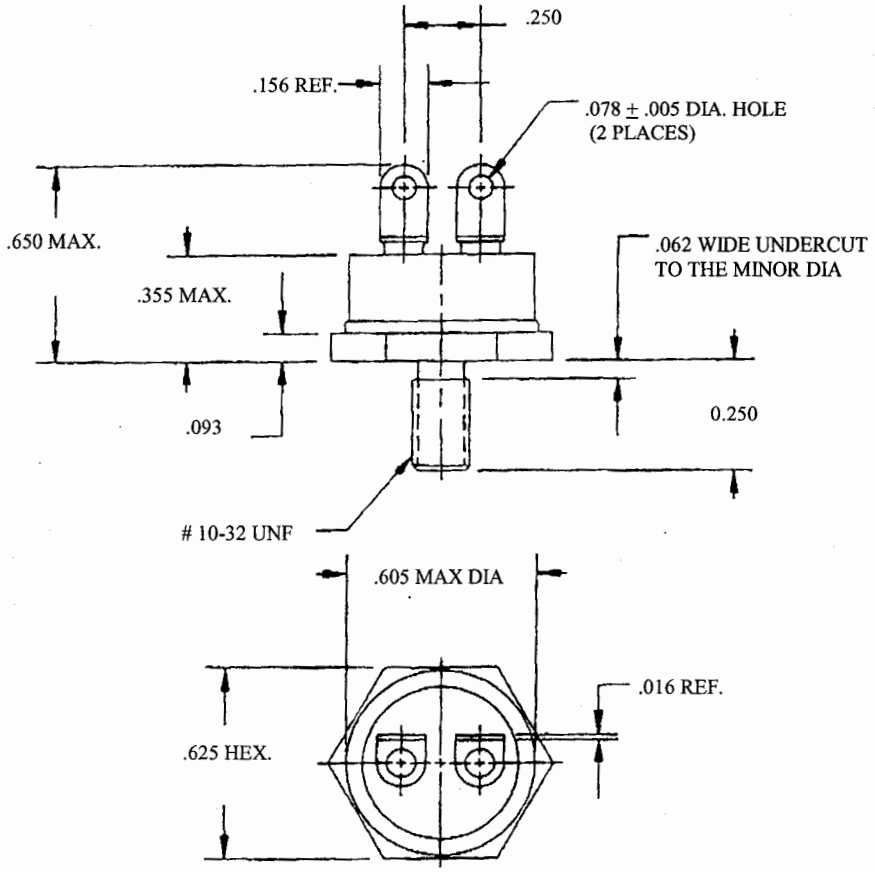

CONFIGURATION J

Figure 1. Dimensions. (continued)

NOTES:

1. Dimensions are in inches.
2. Unless otherwise specified, tolerance is ± .015.
3. Exact shape of switch and terminals are optional provided dimensions specified are not exceeded.
4. Configuration C, D and E use the basic switches of configuration A. Configuration F, G and H use the basic switches of configuration B.
5. This dimension not to exceed extended envelope of the switch.

REQUIREMENTS:

Dimensions and configuration: See figure 1.

Operating temperature range: -65°F to 500°F.

Tolerance: Standard tolerance is ±6°F.

Mounting: See figure 1.

Weight: Not to exceed .025 pound.

Contact ratings: See table I

Contact resistance: 25 milliohms maximum.

Classification: Type I, Class 4, except 80,000 feet altitude, per MIL-S-24236.

TESTING:

Qualification and testing per GSFC S-311-641 with Vibration, PIND and Millipore Cleaning and Inspection required.

Load	Altitude			Endurance (cycles)
	Sea Level		80,000 feet	
	28 V	115 V , 60 Hz	28 V	
	amperes	amperes	amperes	
Resistive	5.0	2.0	5.0	100,000
Inductive	2.5	1.0	2.5	100,000
Lamp	1.0	0.5	1.0	100,000

Custodian: Goddard Space Flight Center
Greenbelt, MD 20771
Attn: Document Administrator Code 562