MuTr FEE Safety Review

N. Bruner UNM

June 22, 2000

Outline

1. MuTr Racks
2. MuTr Cable Runs
3. MuTr FEE LV
4. LVHP Supplies-to-FEE Chassis
5. MuTr Glink/Clink LV
6. LVHP Supplies-to-Glink/Clink Crates
7. Glink/Clink Crates-to-FEE Chassis
8. Calibration Cables
9. MuTr HV
10. Grounding
11. Water and Gas Lines
12. Monitoring

MuTr Racks

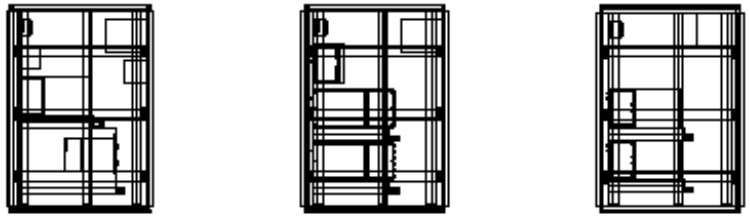

The Front end electronics and HV distribution cards are mounted near the chambers. All other electronics are mounted in racks on a platform supported off the magnet's back plate. Rack 1 (left) houses HV power supply and timing & fast control crates. Rack 2 (center) houses LV power supply and distribution cards. Rack 3 (right) houses more LV distribution cards and the calibration and slow controls crates.

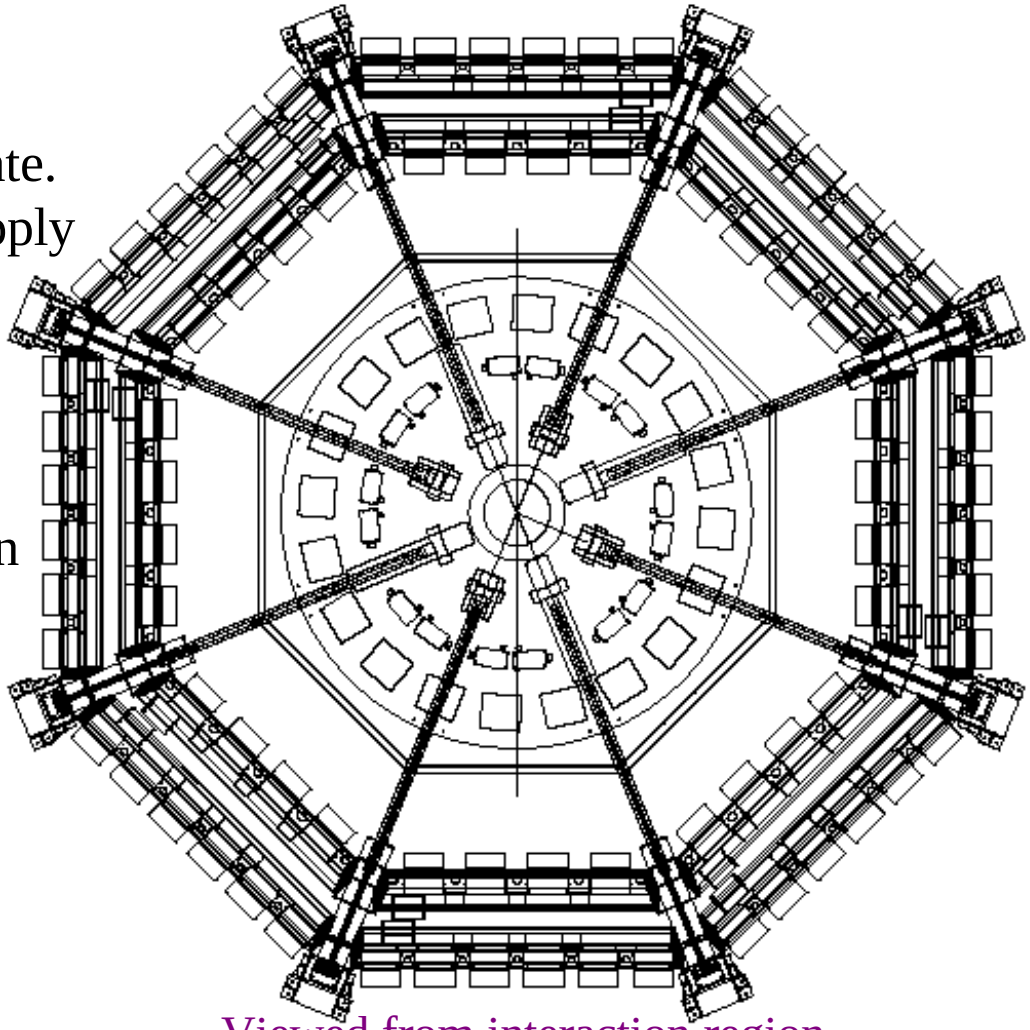

Viewed from interaction region.

Figures by J. Boissevain

MuTr Cable Runs

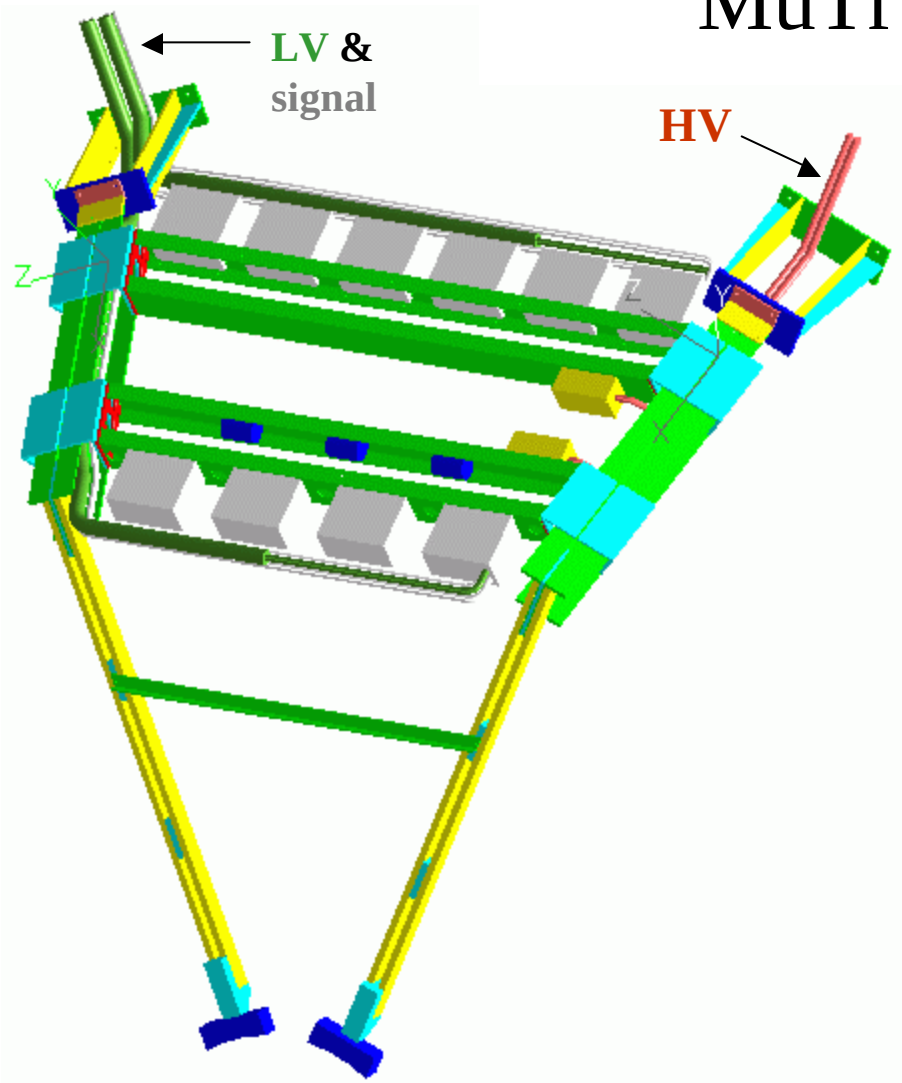

Routing for one octant of Stations 2 & 3

- Station 2 and 3 HV cables are routed across octants in bundles until they reach the main beams. The main beams are separated into two channels. HV, gas, water, and nitrogen are routed within one channel. Cathode signal and LV power cables are routed within the other.
- From exit ports at each octant, Station 2 and 3 cable trays follow the edges of the back plate to the cable tray located below the rack platform.
- Station 1 cabling will be routed through trays along the 4:30, 7:30 o'clock lampshade panels then up to the eyebrow.

MuTr Cable Runs

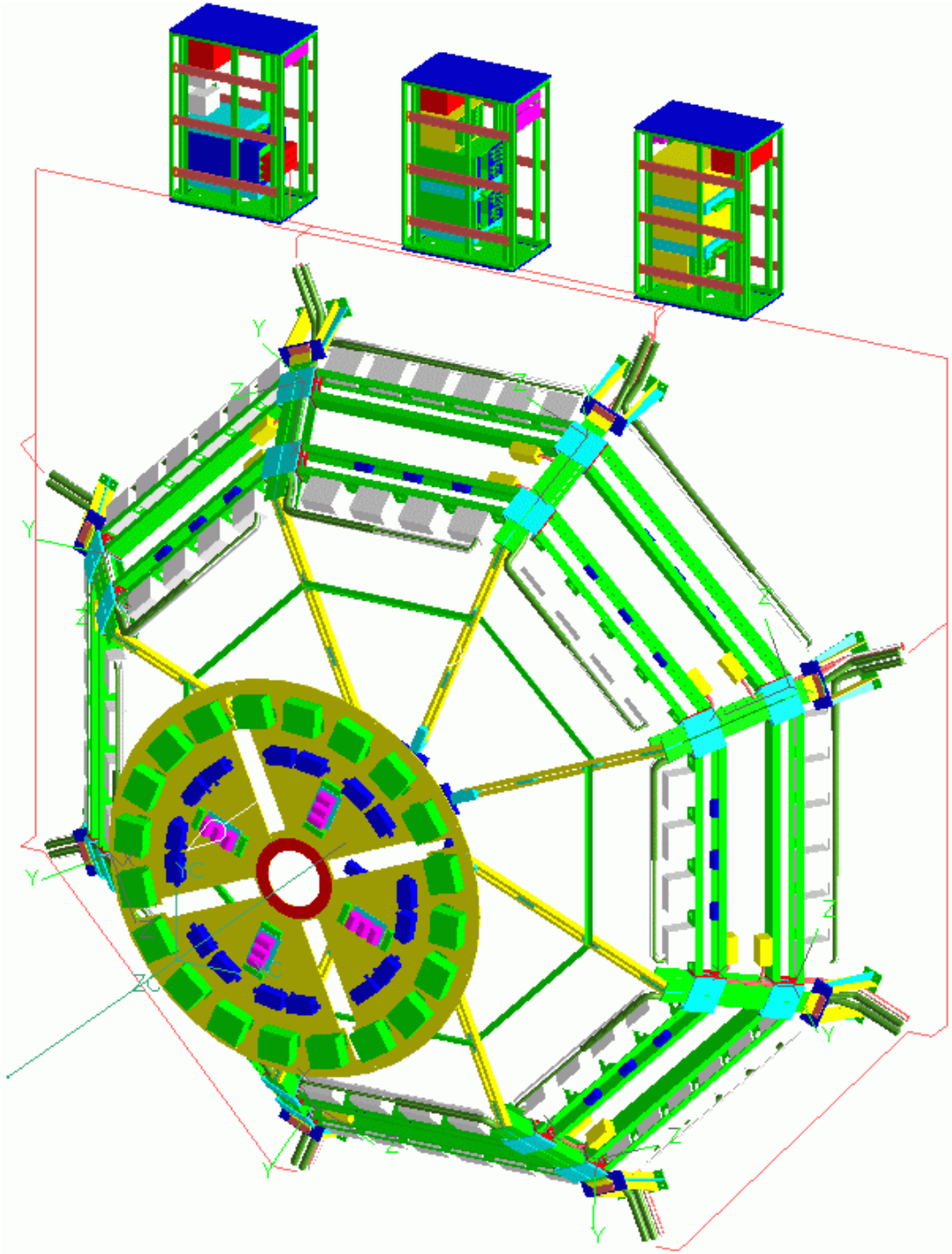

South Arm cable runs:

- HV
- LV
- Signal

MuTr FEE LV

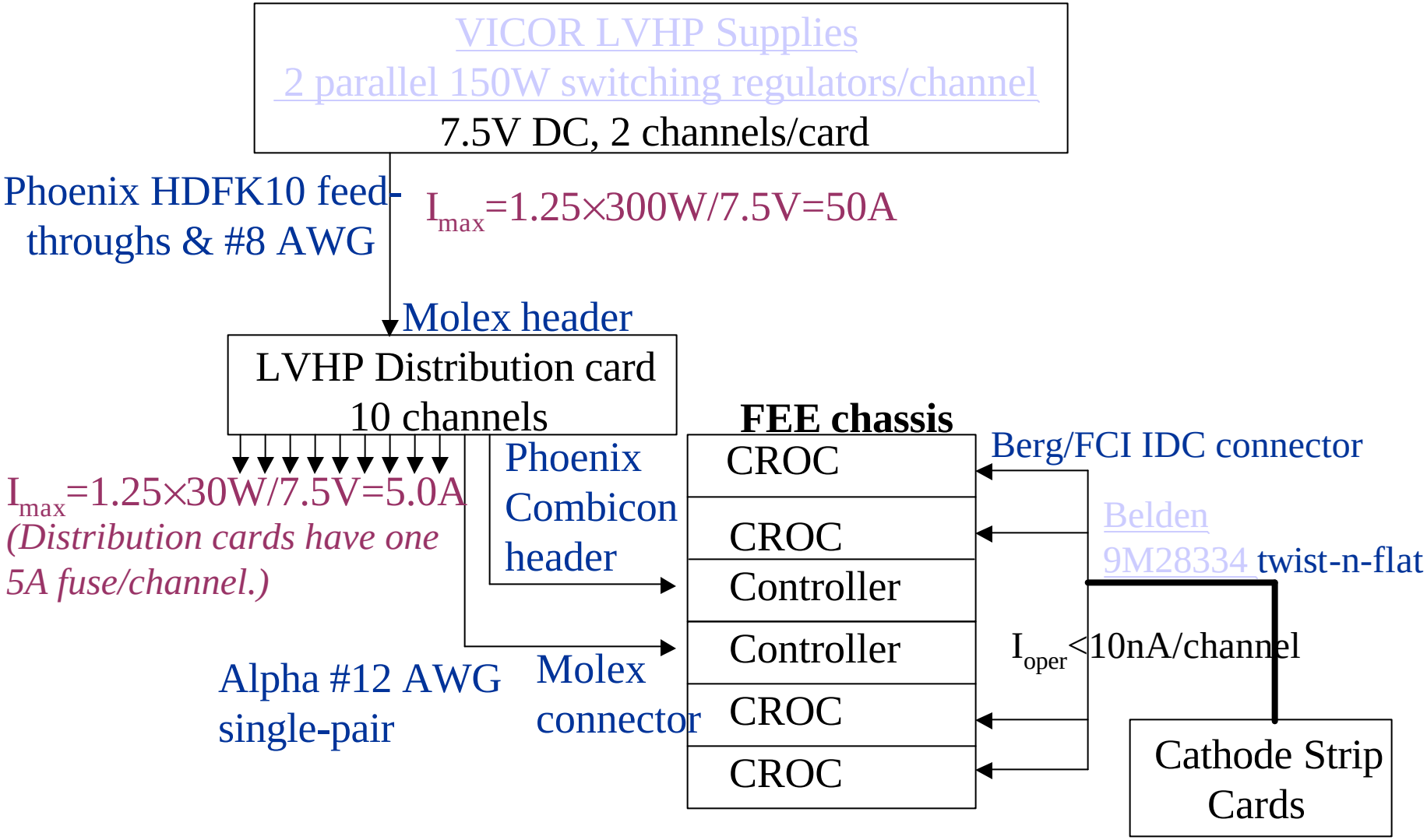
VICOR LVHP Supplies
2 parallel 150W switching regulators/channel
7.5V DC, 2 channels/card
Phoenix HDFK10 feed-throughs & #8 AWG
I_{max}=1.25×300W/7.5V=50A
Molex header
LVHP Distribution card
10 channels
I_{max}=1.25×30W/7.5V=5.0A
(Distribution cards have one 5A fuse/channel.)
Phoenix Combicon header
Alpha #12 AWG single-pair
Molex connector
FEE chassis
CROC
CROC
Controller
Controller
CROC
CROC
Berg/FCI IDC connector
Belden 9M28334 twist-n-flat
I_{oper}<10nA/channel
Cathode Strip Cards

LVHP Supplies-to-FEE Chassis

- Standard PHENIX LVHP supplies, variant M
  - ° Chassis is electrically isolated from support structure.
  - ° *Operating Voltage and Current*: 7.5V at 30A
  - ° *Connector*: Phoenix Contact HDFK10 feed-through, UL rated for 300V at 65A
  - ° *Cable*: 8 AWG single-pair, 2-6 ft
- LVHP distribution cards to fan power to 10 channels each
  - ° *Operating Voltage and Current*: 7.5V at 3A
  - ° *Fuses*: Raychem Polyswitch resettable fuse (RGE500), I_{hold}= 5A, I_{trip}= 8.5A
  - ° *Cable*: Alpha Wire 5616B1201, 12 AWG single-pair shielded, passes UL 1277 vertical tray flame test, 22-64 ft
  - ° *Connectors*: Molex Mini-Fit header, 3 pin, keyed, V_{max}= 600V, I_{max}= 50A, rated UL 94V-0; Phoenix Contact Combicon header, 3 pin, rated for 400V at 20A and UL 94V-2 inflammability
  - ° *Material*: FR-4

LVHP Supplies-to-FEE Chassis (cont.)

- FEE backplane

  ° *Cable*: Alpha Wire 5616B1201, 12 AWG single-pair shielded, passes UL 1277 vertical tray flame test. 2ft pigtail soldered to FEE backplane

  ° *Connector*: Molex HCS-125 3-pin locking connector (03-12-1036,18-12-1602 and 18-12-1222), keyed housings, I_{max}= 20A, V_{max}=600V, withstanding 1500V, rated UL 94V-2

MuTr Glink/Clink LV

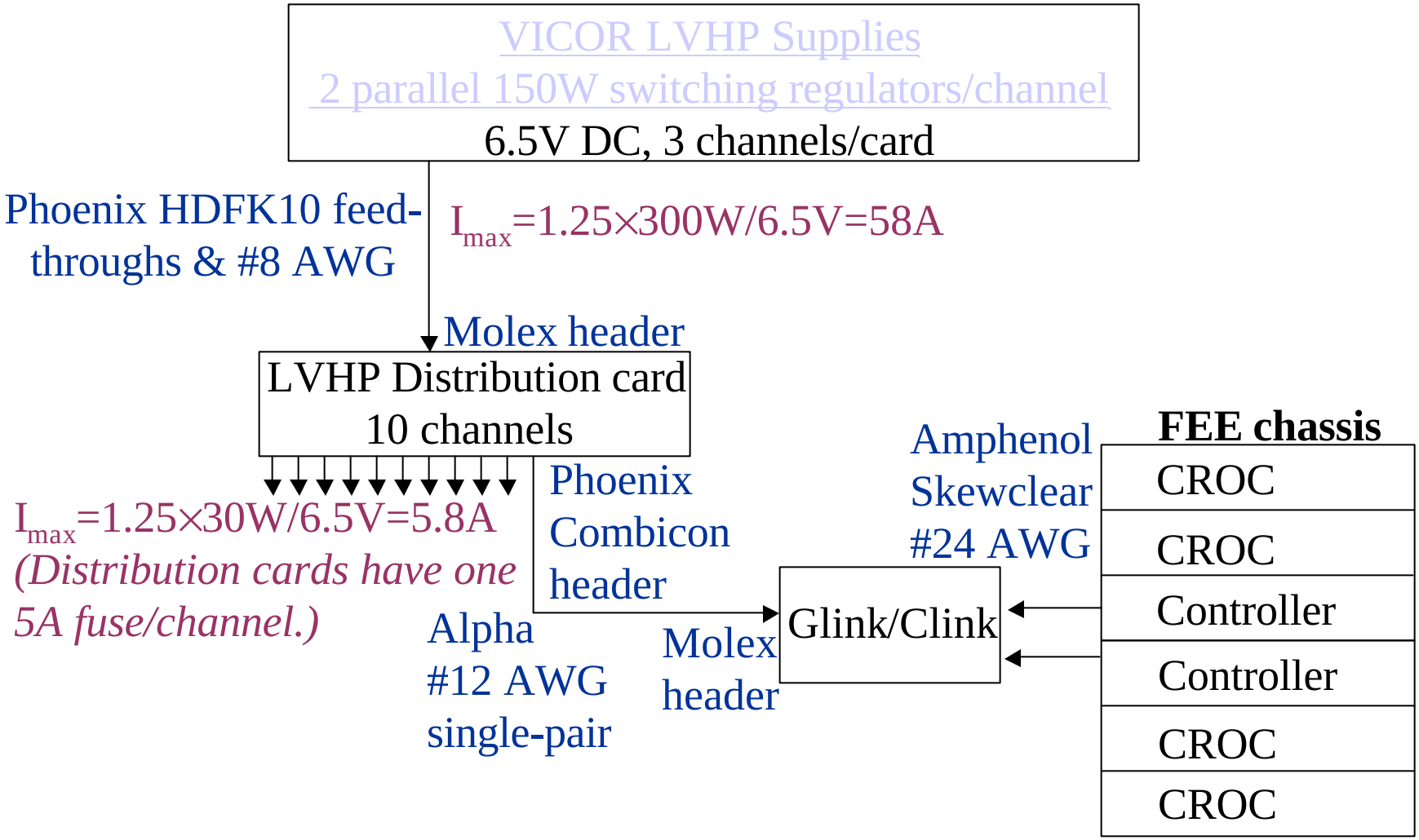

LVHP Supplies-to-Glink/Clink Crates

- Standard PHENIX LVHP supplies, variant N
  - ° Chassis is electrically isolated from support structure.
  - ° *Operating Voltage and Current*: 6.5V at 35A
  - ° *Connector*: Phoenix Contact HDFK10 feed-through, UL rated for 300V at 65A
  - ° *Cable*: 8 AWG single-pair, 2-10 ft
- LVHP distribution cards to fan power to 10 channels each.
  - ° *Operating Voltage and Current*: 6V at <3.5A
  - ° *Fuses*: Raychem Polyswitch resettable fuse (RGE500), I_{hold}= 5A, I_{trip}= 8.5A
  - ° *Cable*: Alpha Wire 5616B1201, 12 AWG single-pair shielded, passes UL 1277 vertical tray flame test. 17-57 ft
  - ° *Connectors*: Molex Mini-Fit header, 3 pin, keyed, V_{max}= 600V, I_{max}= 50A, rated UL 94V-0; Phoenix Contact Combicon header, 3 pin, rated for 400V at 20A and UL 94V-2 inflammability; Glink/Clink header: Molex Mini-Fit , 3 pin, keyed, V_{max}= 600V, I_{max}= 50A, rated UL 94V-0
  - ° *Material*: FR-4

LV distribution card schematic

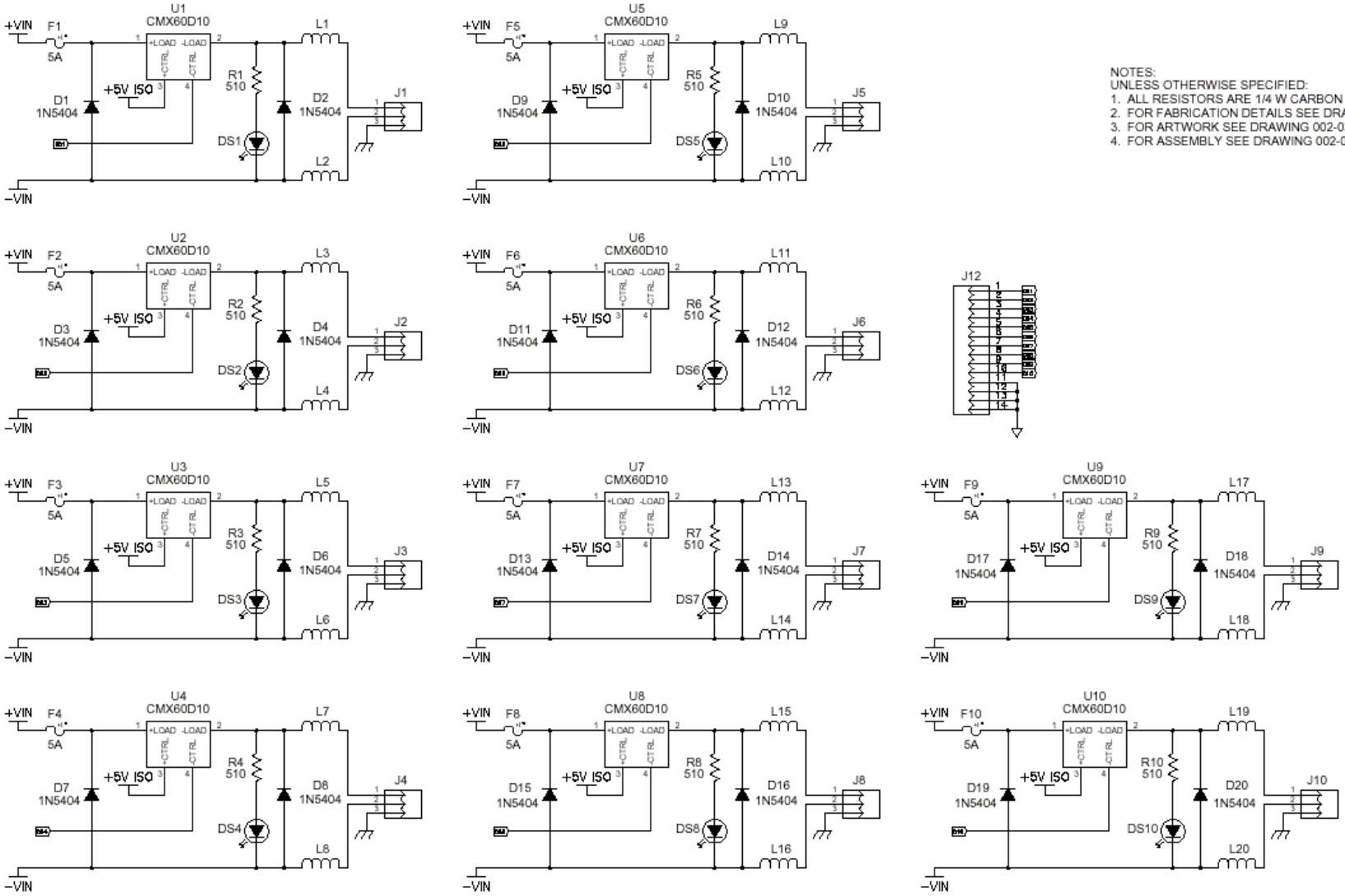

NOTES:
UNLESS OTHERWISE SPECIFIED:
1. ALL RESISTORS ARE 1/4 W CARBON FILM WITH VALUES IN OHMS.
2. FOR FABRICATION DETAILS SEE DRAWING 002-0312-100-02.
3. FOR ARTWORK SEE DRAWING 002-0312-100-03.
4. FOR ASSEMBLY SEE DRAWING 002-0312-100-04.

UNIVERSITY OF NEW MEXICO
DEPARTMENT OF PHYSICS AND ASTRONOMY
ELECTRONICS SHOP
ALBUQUERQUE, NEW MEXICO, USA 87131

DRAWN J. BEHRENDT DATE 3/15/00

LOW VOLTAGE

LV Distribution Card Part List

BILL OF MATERIALS

ITEM	REF. DES.	QTY.	DESCRIPTION	PART NO.	MFR.
1	C1	1	CAP., 10 uF, 16 WV, TANTALUM	ECS-F1CE106K	PANASONIC
2	C2	1	CAP., 22 uF, 16 WV, TANTALUM	ECS-F1CE226K	PANASONIC
3	D1-D20	20	RECTIFIER, 3A, 400V	1N5404	MOTOROLA
4	DS1-DS10	10	DISPLAY, LED, R. A., GREEN	5300H1	CML
5	DS11	1	DISPLAY, LED, R. A., RED	5300F5	CML
6	F1-F10	10	FUSE, PTC RESETTABLE, 5A	RGE500	RAYCHEM
7	HS1	1	HEAT SINK, TO-220, LOW PROFILE	5070	AAVID
8	J1-J10	10	HEADER, TERMINAL BLOCK	1757488	PHOENIX CONTACT
9	J11	1	HEADER, TERMINAL BLOCK	4282	MOLEX
10	J12	1	HEADER, LATCH EJECTOR, 14-PIN	3314-5002	3M
11	JMP1, JMP2	2	HEADER, 2-PIN	–	–
12	L1-L20	20	INDUCTOR, FERRITE BEAD	BL02RN2-R6	MURATA
13	R1-R11	11	RESISTOR, CF, 1/4W, 5%, 510 OHM	CFR-25JB 510R	YAGEO
13	R12	1	RESISTOR, CF, 1/4W, 5%, 200 OHM	CFR-25JB 200R	YAGEO
14	U1-U10	10	RELAY, SS, DC, 60 V, 10 A	CMX60D10	CRYDOM
15	U11	1	I.C., VOLTAGE REGULATOR, LDO, 5 V	LT1086CT-5	LINEAR TECHNOLOGY
16	U12	1	CONVERTER, DC-DC, ISOLATED, 5 V	NML0505S	NEWPORT COMPONENTS
17	–	1	KIT, FRONT PANEL, VME, 6U X 4HP	32010	APW
18	–	2	EJECTOR LATCH, LONG	3505-3	3M

LV Distribution-to-FEE Pigtail Cable

ITEM #	QTY	PART #	MANUFACTURER	DESCRIPTION
1	1	18 28 25 2	PHOENIX CONTACT	Plug, 3 pin, UL rated for 400 V, 20 Amps, UL94 inflammability, w/screw locking feature, for AWG 24–10
2	1	5616B1210	ALPHA WIRE	12 AWG Pair w/foil shield and 18 AWG Drain wire, UL1277 Tray Cable, 36" OD
3	1	03–12–1036	MOLEX	Receptacle, HCS–125 Power Connector, UL 94V–2, 600 V, 20 Amps
4	2	18–12–1602	MOLEX	Terminal, Female, for 10–14 AWG wire,
5	1	18–12–1222	MOLEX	Terminal, Female, for 16–18 AWG wire,

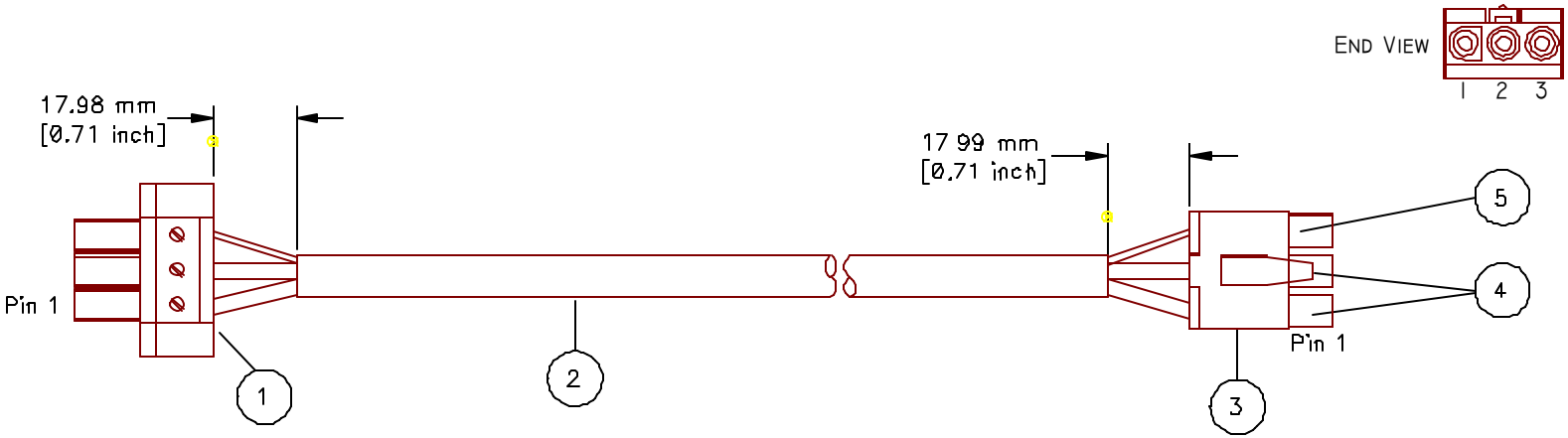

FEE Backplane Pigtail Cable

ITEM #	QTY	PART #	MANUFACTURER	DESCRIPTION
1	1	5616B1201	ALPHA WIRE	12 AWG Pair w/foil shield and 18 AWG Drain wire, UL1277 Tray Cable, .36" OD
2	1	03-12-2036	MOLEX	Plug, HCS-125 Power Connector, UL 94V-2, 600 V, 20 Amps
3	2	18-12-2602	MOLEX	Terminal, male, for 10-14 AWG wire,
4	1	18-12-2222	MOLEX	Terminal, male, for 16-18 AWG wire,

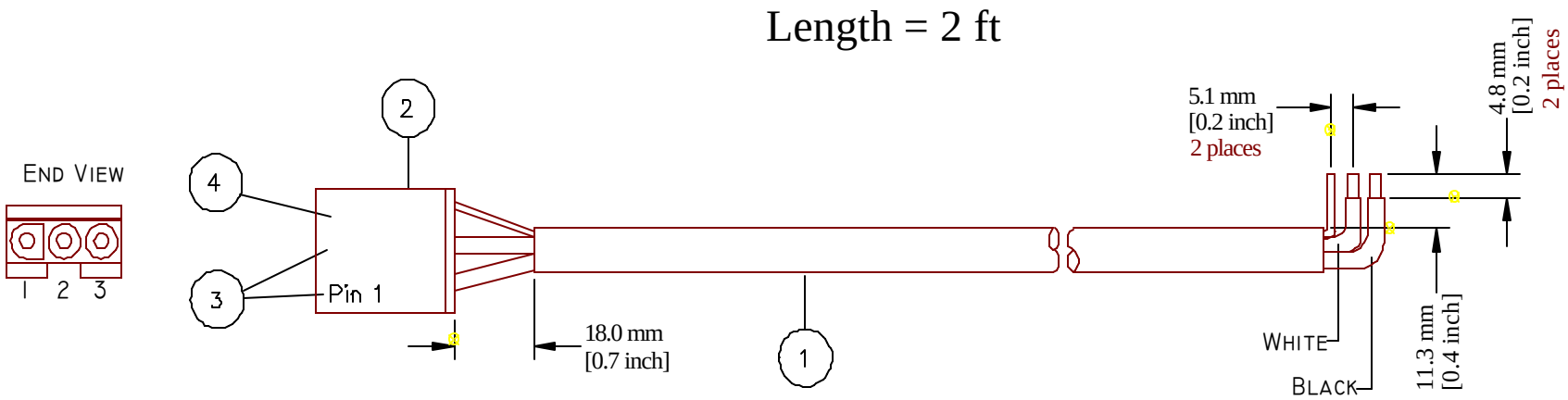

Glink/Clink Crates-to-FEE Chassis

•Glink/Clink crates are mounted on the back of the magnet plate for Stations 2 & 3 and on the lower lampshade panels for Station 1. FEE chassis are mounted by the tracking chambers.

° *Cable assembly*: Amphenol Skewclear, 24 AWG shielded parallel pairs, flammability rating: CL2, 30 ft

° *Operating Voltage and Current*: 3.3V at <3.5mA

° Cables are routed with LVPS cables from LV Distribution to FEE chassis.

LV Distribution Cable Lengths

	inside magnet	oustide magnet to rack	slop in rack	Length in meters	Length in feet	# of FEM	# of Glink	Total length needed
Octant 1 Station 1:	3.0	14.1	2.0	19.1	63	2.5	0.0	157
Octant 1 Station 2:	4.0	6.7	2.0	12.7	42	8.0	2.5	438
Octant 1 Station 3:	3.0	6.7	2.0	11.7	38	10.0	2.5	480
Octant 2 Station 1:	3.0	14.1	2.0	19.1	63	2.5	0.0	157
Octant 2 Station 2:	4.0	1.8	2.0	7.8	26	8.0	2.5	269
Octant 2 Station 3:	3.0	1.8	2.0	6.8	22	10.0	2.5	279
Octant 3 Station 1:	3.0	14.1	2.0	19.1	63	2.5	0.0	157
Octant 3 Station 2:	4.0	2.4	2.0	8.4	28	8.0	2.5	289
Octant 3 Station 3:	3.0	2.4	2.0	7.4	24	10.0	2.5	303
Octant 4 Station 1:	3.0	14.4	2.0	19.4	64	2.5	0.0	159
Octant 4 Station 2:	4.0	7.0	2.0	13.0	43	8.0	2.5	448
Octant 4 Station 3:	3.0	7.0	2.0	12.0	39	10.0	2.5	492
Octant 5 Station 1:	3.0	14.4	2.0	19.4	64	2.5	0.0	159
Octant 5 Station 2:	4.0	10.3	2.0	16.3	53	8.0	2.5	562
Octant 5 Station 3:	3.0	10.3	2.0	15.3	50	10.0	2.5	627
Octant 6 Station 1:	3.0	14.4	2.0	19.4	64	2.5	5.0	477
Octant 6 Station 2:	4.0	13.4	2.0	19.4	64	8.0	2.5	668
Octant 6 Station 3:	3.0	13.4	2.0	18.4	60	10.0	2.5	755
Octant 7 Station 1:	3.0	14.4	2.0	19.4	64	2.5	0.0	159
Octant 7 Station 2:	4.0	13.0	2.0	19.0	62	8.0	2.5	655
Octant 7 Station 3:	3.0	13.0	2.0	18.0	59	10.0	2.5	738
Octant 8 Station 1:	3.0	14.1	2.0	19.1	63	2.5	5.0	470
Octant 8 Station 2:	4.0	10.3	2.0	16.3	53	8.0	2.5	562
Octant 8 Station 3:	3.0	10.3	2.0	15.3	50	10.0	2.5	627
								10086

Glink Cable Lengths

	inside magnet	oustide magnet to crate	Length in meters	Length in feet
Octant 1 Station 1:	3.0	14.1	17.1	56
Octant 1 Station 2:	4.0	2.9	6.9	23
Octant 1 Station 3:	3.0	2.9	5.9	19
Octant 2 Station 1:	3.0	14.1	17.1	56
Octant 2 Station 2:	4.0	2.1	6.1	20
Octant 2 Station 3:	3.0	2.1	5.1	17
Octant 3 Station 1:	3.0	14.1	17.1	56
Octant 3 Station 2:	4.0	2.1	6.1	20
Octant 3 Station 3:	3.0	2.1	5.1	17
Octant 4 Station 1:	3.0	14.4	17.4	57
Octant 4 Station 2:	4.0	2.5	6.5	21
Octant 4 Station 3:	3.0	2.5	5.5	18
Octant 5 Station 1:	3.0	14.4	17.4	57
Octant 5 Station 2:	4.0	2.5	6.5	21
Octant 5 Station 3:	3.0	2.5	5.5	18
Octant 6 Station 1:	3.0	14.4	17.4	57
Octant 6 Station 2:	4.0	2.4	6.4	21
Octant 6 Station 3:	3.0	2.4	5.4	18
Octant 7 Station 1:	3.0	14.4	17.4	57
Octant 7 Station 2:	4.0	2.6	6.6	22
Octant 7 Station 3:	3.0	2.6	5.6	18
Octant 8 Station 1:	3.0	14.1	17.1	56
Octant 8 Station 2:	4.0	3.0	7.0	23
Octant 8 Station 3:	3.0	3.0	6.0	20

MuTr HV

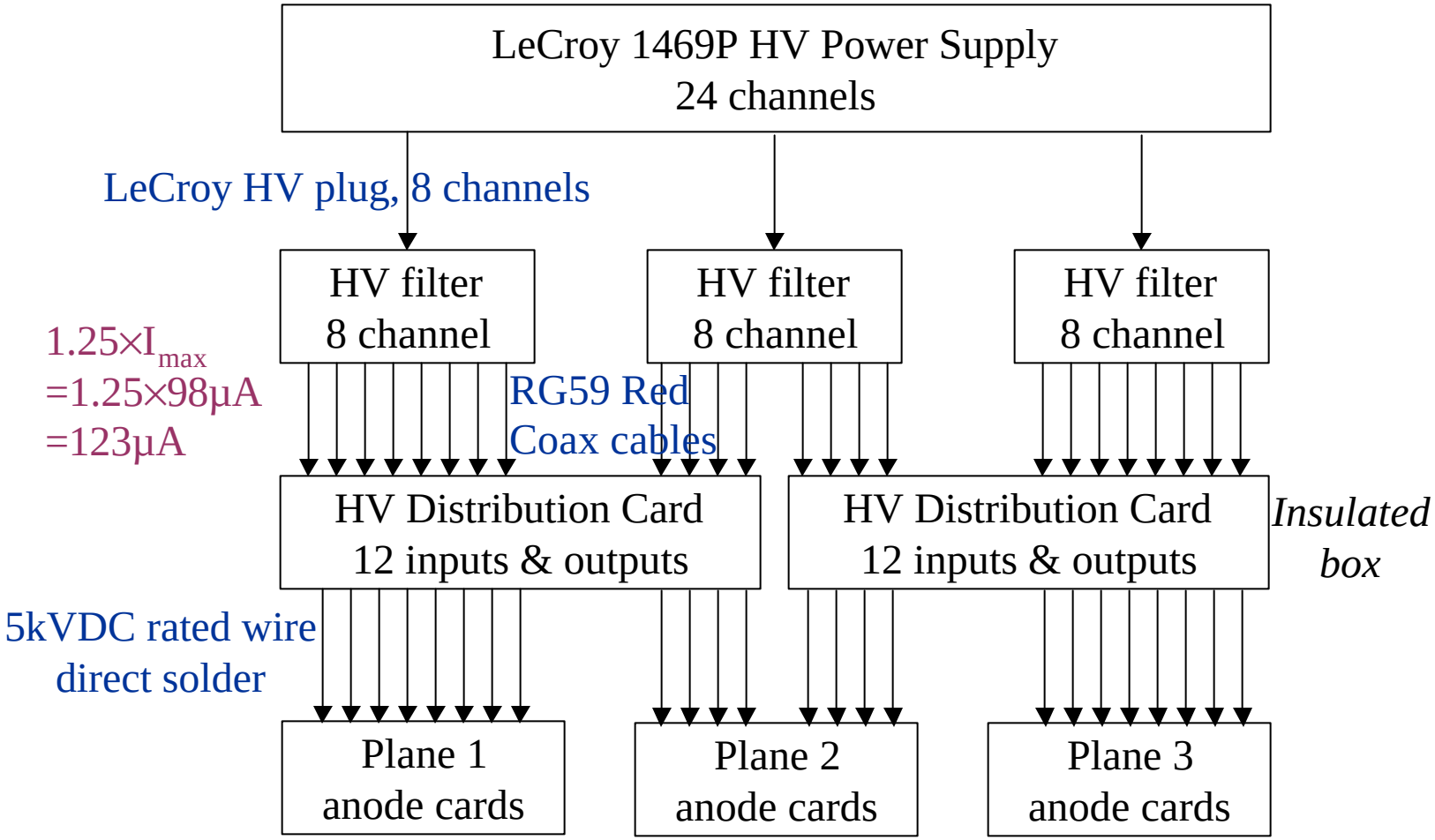

Octant Diagram for Station 1

HV Power Supplies-to-Anode Cards

- LeCroy 1469P HV Power Supply
  - ° Crate mounted, grounded to earth
  - ° *Voltage*: Max. 3.5 kV
  - ° *Current*: Max. 98 µA/channel, I_{trip} programmable from 5 µA to 98µA/channel
  - ° *Connector*: LeCroy HV plug (part #455 220 009)
- HV Plug/Filter Box
  - ° *Material*: FR-4
  - ° Housed in an insulating box, rated UL 94V-0
  - ° Plugged directly into HV power supply
  - ° *Cable*: BNL stock A30304 RG-59 cable, 12-66 ft, direct solder inside box - direct solder to HV distribution boards
  - ° HV tested to 4kV

HV Power Supplies-to-Anode Cards (cont.)

- HV distribution boards

  ° Housed in an insulating box, rated UL 94V-0, mounted on the Cross-Rib Assemblies for Stations 2 and 3 and on the FEE plate for Station 1

  ° HV tested to 4kV

  ° *Cable*: Judd Wire CSA TV-6 stranded wire, rated 5kVDC, twisted pairs, ~2ft

- Anode cards

  ° Direct solder of stranded twisted-pairs, 5kVDC rated, to cards

  - V_{oper}=1750V, I_{oper}~10nA/card

  - Station 1 HV wires insulated with DP460 (3M epoxy, volume resistivity = 2.4×10^{14} ? -cm)

  ° *Material*: FR-4

  ° Comply with IPC-D-275 specification of 0.00012”/V separation.

  ° HV tested: prototype passed 4.4kV, production cards pass 3kV.

HV Plug/Filter Box Schematic

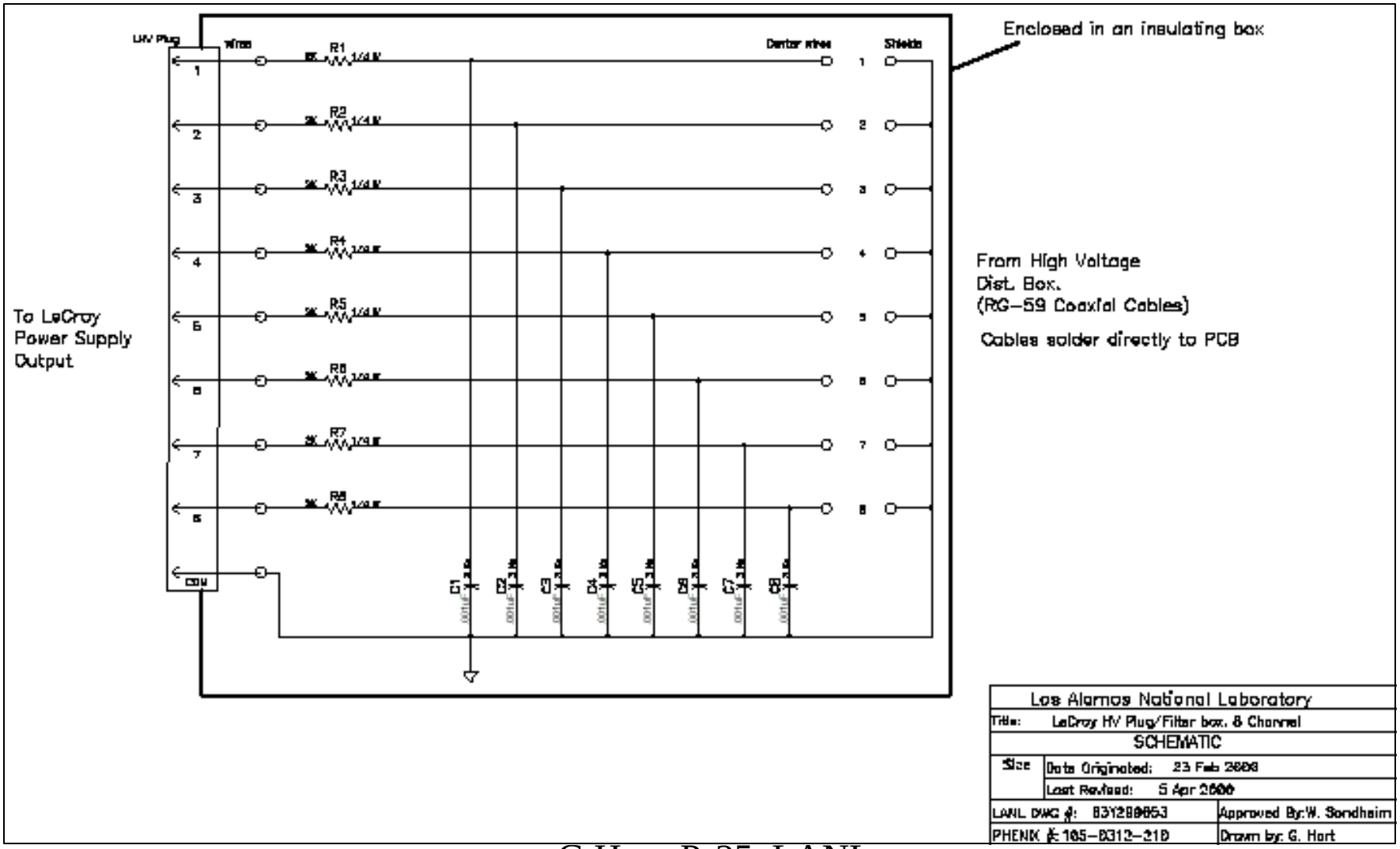

HV Plug/Filter Box Assembly

Item	Ref Des	Qty	Manufacturer	Description	Part #	Source	Cat #
1	R1–8	8	Ohmite	Resistor, Carbon Comp, 2 K, 1/4 W	RC1/4S202JT	Newark	16H361
2	C1–8	8	Sprague/Vishay	Capacitor, [illegible] uF @ 3 to [illegible]	3SGA010	Newark	44F5277
3	P1	1	AMP	LHV 8 channel plug	443161–1	BHL	
4		1	Bud	Box, Plastic, UL 94V–0, Black, w/lid	CU–[illegible]	Newark	31F3477
5	JP1, 2, 3, 4/5/6	12"	Joint Wire	Wire, 24 AWG, 7/32 Str., 5 kV, Red	[illegible]	Alpha	
6		1		PCB, single sided, .062" thick, FR–4	63[illegible]3A/B		
7		1		assembly	63[illegible]		

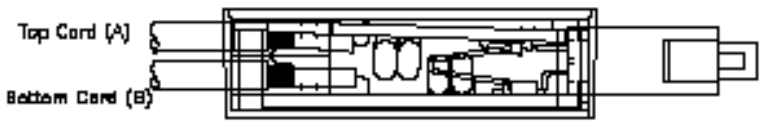

Side View, showing both cords installed in box

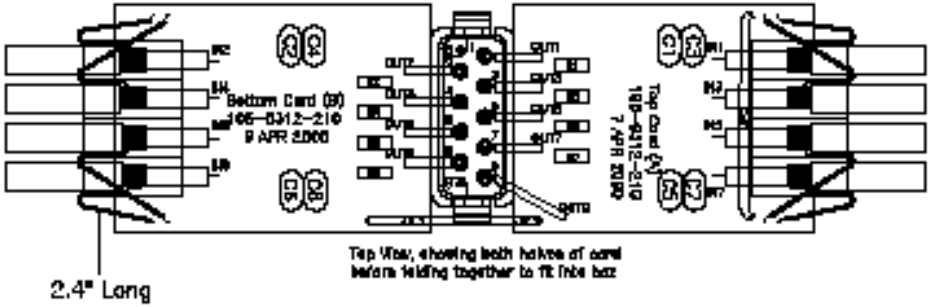

Top View, showing both halves of cord before folding together to fit into box

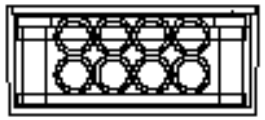

Cable end view

Plug end view

1. Assemble and Solder per IPC–6012, Class II
2. Apply acrylic conformal coating (1 mil minimum thickness) to both sides of assembled boards

See 63[illegible]64 / 105–0312–0212 for HV Desk Cable Drawing

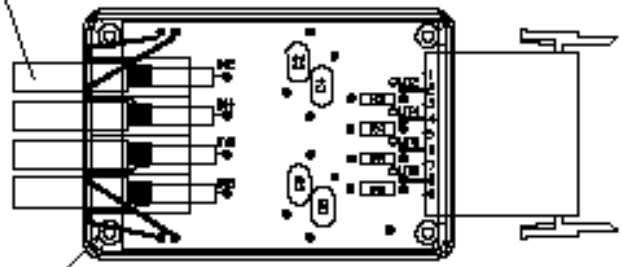

Top View, showing bottom cord inside plastic box

ASSEMBLY DRAWING

Los Alamos National Laboratory	
Title: PHENIX MuTr HV Distribution System	
LeCroy HV Plug/Filter box, 8 channel	
Size: B	Date Originated: 30 APR 1999
	Date Last Revised: 9 Apr 2000
LANL DWG # 63[illegible]3A	Approved By: W. Sondheim
PHENIX DWG # 105–0312–210	Drawn by: G. Hart

High Voltage Distribution Box Schematic

(This is an insulated box located on the chamber support structure)

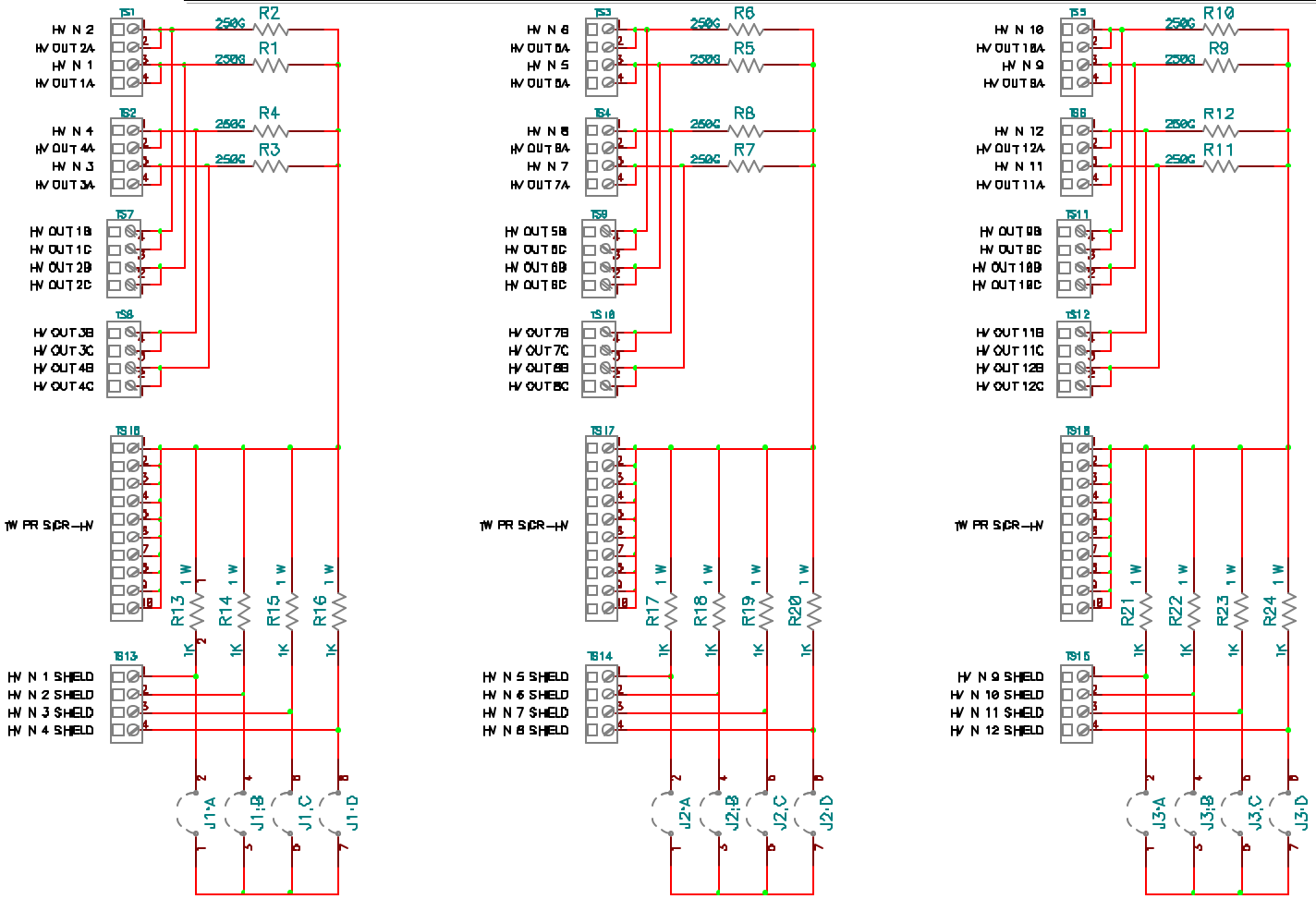

12 Channel Distribution PCB (Station 2S)

HV Distribution Box

ITEM	REF #	QTY	MANUFACTURER	DESCRIPTION	PART #	Source	Cat #	Cost/ea
1		1	D-2/ Dodney	Connector, Strain Relief, Grip Tite Type BR	[illegible]	Summit Electric	[illegible]	3.49
2		1	D-2/ Dodney	Connector, Strain Relief, Grip Tite Type BR	[illegible]	Summit Electric	[illegible]	2.31
3		2	Micro Plastics Inc	Screw, Phillips head, M6 x 8, 1 mm pitch, Plastic	[illegible]	Bernhill Bolt	[illegible]	.35
4		2	Micro Plastics, Inc	Washer: M6, plastic	[illegible]	Bernhill Bolt	[illegible]	.30

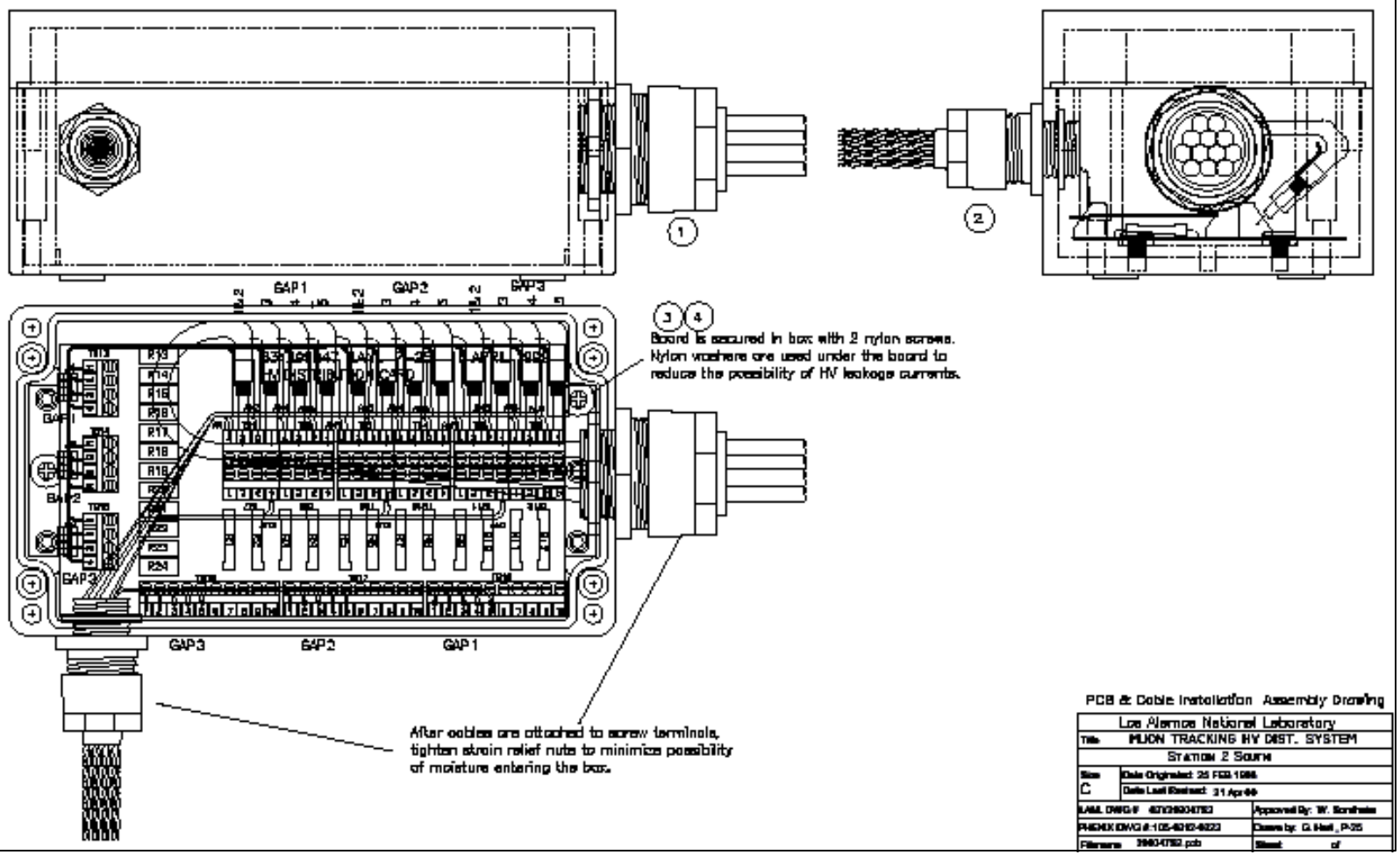

PCB & Cable Installation Assembly Drawing

Los Alamos National Laboratory	
Title: MUON TRACKING HV DIST. SYSTEM	
STATION 2 SOURCE	
Size: C	Date Originated: 25 FEB 1996
	Date Last Revised: 31 Apr 96
LANL DWG # [illegible]	Approved By: W. Scrafield
PHENIX DWG # [illegible]	Drawn by: G. Hart, P-25
Filename: [illegible].pcb	Sheet: of

HV Cable Lengths

	inside magnet	oustide magnet to crate	inside rack	Length in meters	Length in feet
Octant 1 Station 1:	3.0	16.1	1.0	20.1	66
Octant 1 Station 2:	1.9	12.3	1.0	15.2	50
Octant 1 Station 3:	1.6	12.3	1.0	14.9	49
Octant 2 Station 1:	3.0	16.1	1.0	20.1	66
Octant 2 Station 2:	1.9	8.7	1.0	11.6	38
Octant 2 Station 3:	1.6	8.7	1.0	11.3	37
Octant 3 Station 1:	3.0	16.1	1.0	20.1	66
Octant 3 Station 2:	1.9	3.8	1.0	6.7	22
Octant 3 Station 3:	1.6	3.8	1.0	6.4	21
Octant 4 Station 1:	3.0	12.4	1.0	16.4	54
Octant 4 Station 2:	1.9	1.0	1.0	3.9	13
Octant 4 Station 3:	1.6	1.0	1.0	3.6	12
Octant 5 Station 1:	3.0	12.4	1.0	16.4	54
Octant 5 Station 2:	1.9	5.0	1.0	7.9	26
Octant 5 Station 3:	1.6	5.0	1.0	7.6	25
Octant 6 Station 1:	3.0	12.4	1.0	16.4	54
Octant 6 Station 2:	1.9	8.3	1.0	11.2	37
Octant 6 Station 3:	1.6	8.3	1.0	10.9	36
Octant 7 Station 1:	3.0	12.4	1.0	16.4	54
Octant 7 Station 2:	1.9	11.4	1.0	14.3	47
Octant 7 Station 3:	1.6	11.4	1.0	14.0	46
Octant 8 Station 1:	3.0	16.1	1.0	20.1	66
Octant 8 Station 2:	1.9	15.0	1.0	17.9	59
Octant 8 Station 3:	1.6	15.0	1.0	17.6	58

Calibration Cables

•Used to pulse anode wires for cathode signal calibration

•*Operating Voltage and Current*: 10V max pulse at low current

•*Cable*: Alpha wire (part # 58604), 24 AWG multi-pair, individually foil shielded, plenum rated, type CL2P, passes Steiner tunnel test. 12-66 ft

•*Connectors*: Amp circular plastic connectors (A1363-ND, A1358-ND and A1332-ND), keyed, rated 94V-1

Grounding

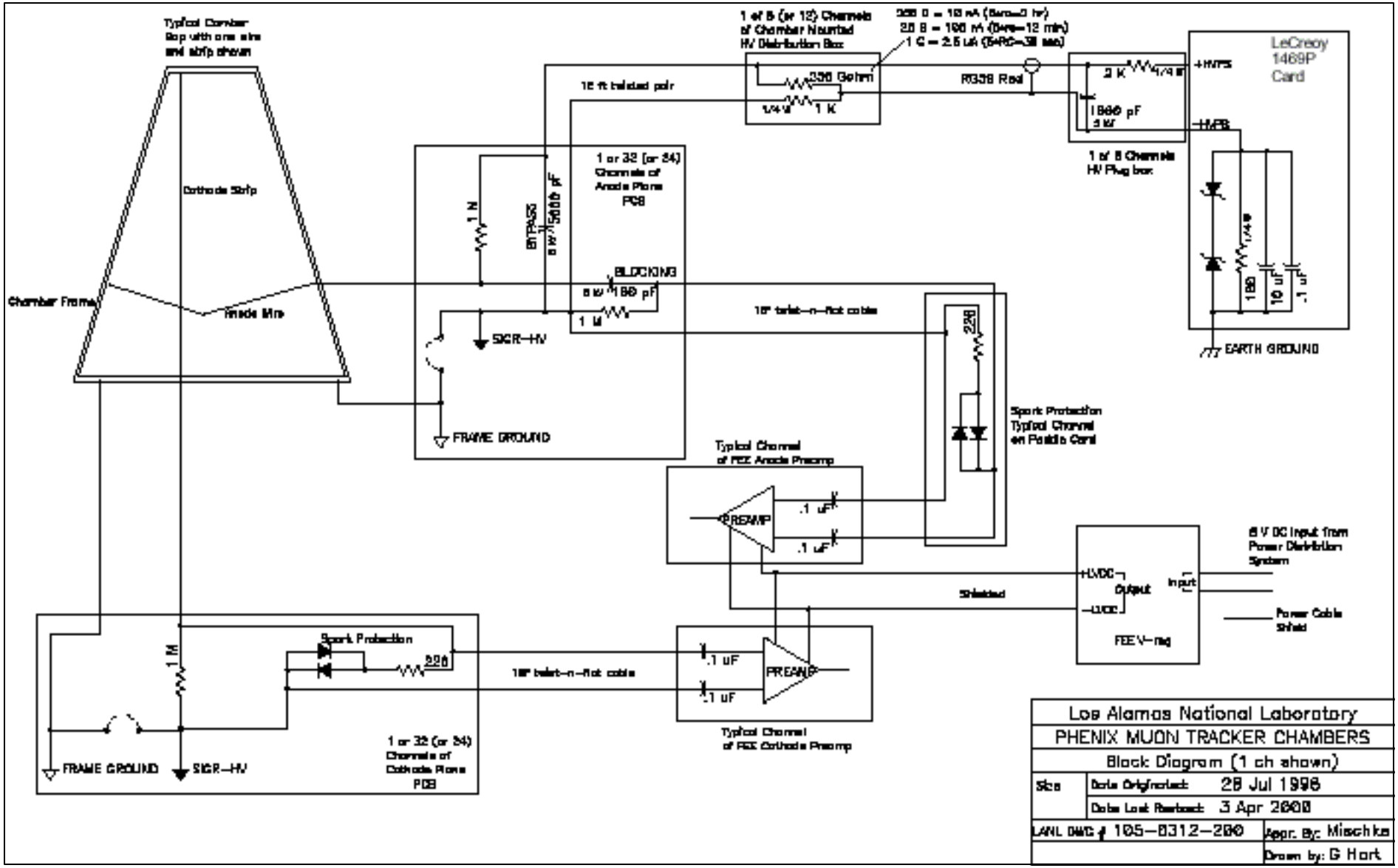

See MuTr Grounding and Shielding by G. Hart.

Water and Gas Lines

already approved

3/8” Omega Nylon 11 tubing will be used outside the magnet for water and non-flammable gas.

Outer manifold-to-inner manifold routing:

- 3/8” tubing
- 3 hoses required for service: water in, water out, air in
- length requirements inside the magnet
  - station 1: 5 ft/quadrant
  - station 2: 9 ft/octant
  - station 3: 6 ft/octant
- total = 3hoses * 8oct [9ft + 6ft] + [5ft * 3hose*4qd] = 420 ft
- total weight = 20 lbs
- part number : TYNY -12375 [3/8 ID * 1/2 OD]

Inner manifold-to-chassis routing:

- 1/8” tubing
- total = 8oct * [100ft +100 ft] + 4qd *[100ft] = 2000 ft
- total weight = 50 lbs
- part number: TYNY 14126 [1/4 OD * 1/8 ID]

Monitoring

Smoke Detection near the Muon Magnet:
Notifier Fire Systems, SDX-751 connected into PHENIX readout system

Cooling:
Water flow ? Analog flow meter attached to main manifold outside magnet
Water temperature ? Thermocouples attached to
three input manifolds (one for each station)
exterior manifold returns
FEM temperature ? Controller cards measure 6 output voltages, 1 current, 3 temperatures
Readout cards measure 4 voltages, 2 temperatures

MuTr FEE Fault Chart has detailed fault monitoring with corrective actions.