Annex B

Measurement Plots

Date/Time: 6/5/2008 09:10:06

Test Laboratory: ETS PRODUCT SERVICE AG

Dipol Valid.900 (m)_250mW_5.6.08

DUT: Dipole 900 MHz; Type: D900V2; Serial: 164

Communication System: CW; Frequency: 900 MHz;Duty Cycle: 1:1
Medium: Muscle 900 MHz Medium parameters used: f = 900 MHz; σ = 1.01 mho/m; ε_r = 54.1; ρ = 1000 kg/m^3
Phantom section: Flat Section

DASY4 Configuration:

- Probe: ET3DV6 - SN1711; ConvF(6.04, 6.04, 6.04); Calibrated: 9/19/2007
- Sensor-Surface: 4mm (Mechanical And Optical Surface Detection)
- Electronics: DAE3 Sn522; Calibrated: 9/18/2007
- Phantom: SAM 12; Type: TP-1217; Serial: QD000P40CA
- Measurement SW: DASY4, V4.7 Build 55; Postprocessing SW: SEMCAD, V1.8 Build 176

Dipol 900 (250mW)/Area Scan (81x161x1): Measurement grid: dx=10mm, dy=10mm
Maximum value of SAR (interpolated) = 2.80 mW/g

Dipol 900 (250mW)/Zoom Scan (7x7x7)/Cube 0: Measurement grid: dx=5mm, dy=5mm, dz=5mm
Reference Value = 53.6 V/m; Power Drift = -0.124 dB
Peak SAR (extrapolated) = 3.58 W/kg
SAR(1 g) = 2.66 mW/g; SAR(10 g) = 1.79 mW/g
Maximum value of SAR (measured) = 2.88 mW/g

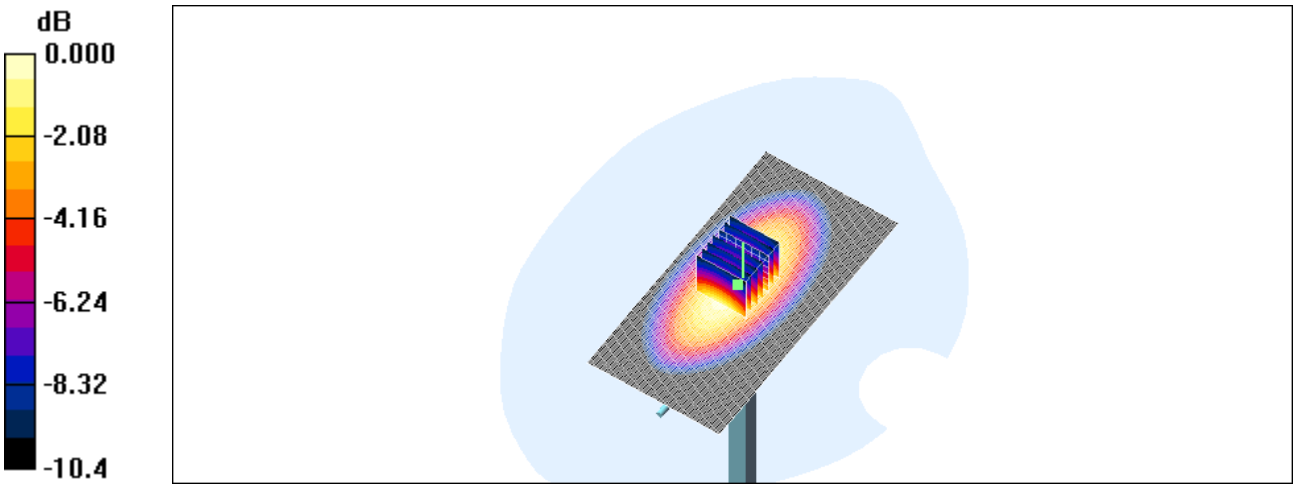

0 dB = 2.88mW/g

Date/Time: 6/9/2008 13:19:40

Test Laboratory: ETS PRODUCT SERVICE AG

Dipol Valid.1900(m)_250mW_9.6.08

DUT: Dipole 1900 MHz; Type: D1900V2; Serial: 5d025

Communication System: CW; Frequency: 1900 MHz;Duty Cycle: 1:1
Medium: Muscle 1900 MHz Medium parameters used: f = 1900 MHz; σ = 1.58 mho/m; ε_r = 51.9; ρ = 1000 kg/m^3
Phantom section: Flat Section

DASY4 Configuration:

- Probe: ET3DV6 - SN1711; ConvF(4.71, 4.71, 4.71); Calibrated: 9/19/2007
- Sensor-Surface: 4mm (Mechanical And Optical Surface Detection)
- Electronics: DAE3 Sn522; Calibrated: 9/18/2007
- Phantom: SAM 12; Type: TP-1217; Serial: QD000P40CA
- Measurement SW: DASY4, V4.7 Build 55; Postprocessing SW: SEMCAD, V1.8 Build 176

Dipol 1900 (250mW)/Area Scan (61x81x1): Measurement grid: dx=10mm, dy=10mm
Maximum value of SAR (interpolated) = 12.1 mW/g

Dipol 1900 (250mW)/Zoom Scan (7x7x7)/Cube 0: Measurement grid: dx=5mm, dy=5mm, dz=5mm
Reference Value = 88.5 V/m; Power Drift = -0.049 dB
Peak SAR (extrapolated) = 17.4 W/kg
SAR(1 g) = 11.4 mW/g; SAR(10 g) = 5.82 mW/g
Maximum value of SAR (measured) = 12.8 mW/g

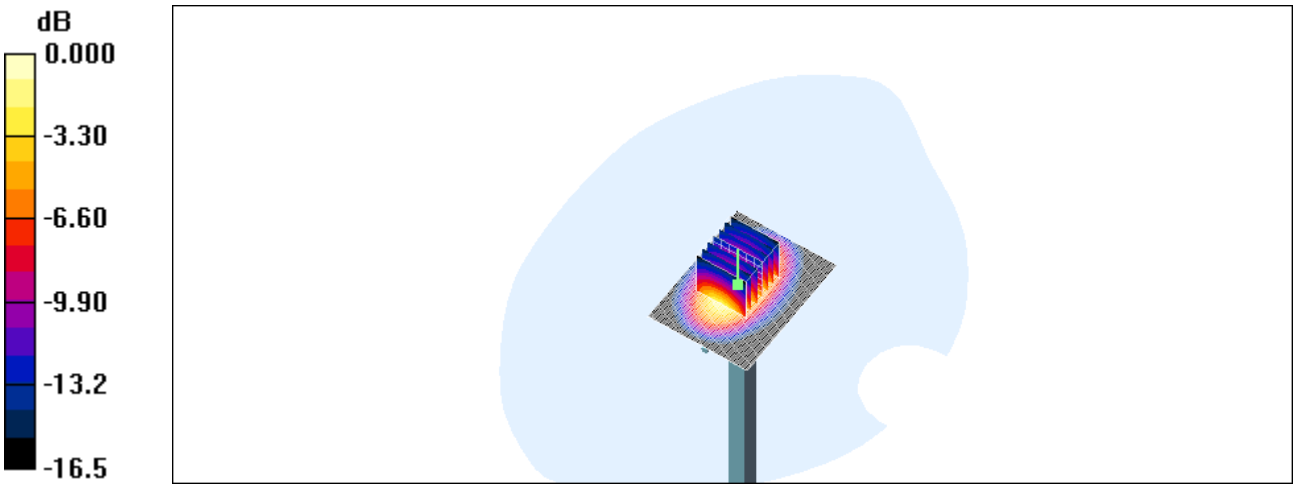

0 dB = 12.8mW/g

Date/Time: 6/5/2008 11:10:57

Test Laboratory: ETS PRODUCT SERVICE AG

Dipol Valid.900 (h)_250mW_5.6.08

DUT: Dipole 900 MHz; Type: D900V2; Serial: 164

Communication System: CW; Frequency: 900 MHz;Duty Cycle: 1:1
Medium: Head 900 MHz Medium parameters used: f = 900 MHz; σ = 0.944 mho/m; ε_r = 40.5; ρ = 1000 kg/m^3
Phantom section: Flat Section

DASY4 Configuration:

- Probe: ET3DV6 - SN1711; ConvF(6.58, 6.58, 6.58); Calibrated: 9/19/2007
- Sensor-Surface: 4mm (Mechanical And Optical Surface Detection)
- Electronics: DAE3 Sn522; Calibrated: 9/18/2007
- Phantom: SAM 12; Type: TP-1217; Serial: QD000P40CA
- Measurement SW: DASY4, V4.7 Build 55; Postprocessing SW: SEMCAD, V1.8 Build 176

Dipol 900 (250mW)/Area Scan (81x161x1): Measurement grid: dx=10mm, dy=10mm
Maximum value of SAR (interpolated) = 2.88 mW/g

Dipol 900 (250mW)/Zoom Scan (7x7x7)/Cube 0: Measurement grid: dx=5mm, dy=5mm, dz=5mm
Reference Value = 55.6 V/m; Power Drift = 0.037 dB
Peak SAR (extrapolated) = 3.90 W/kg
SAR(1 g) = 2.67 mW/g; SAR(10 g) = 1.73 mW/g
Maximum value of SAR (measured) = 2.89 mW/g

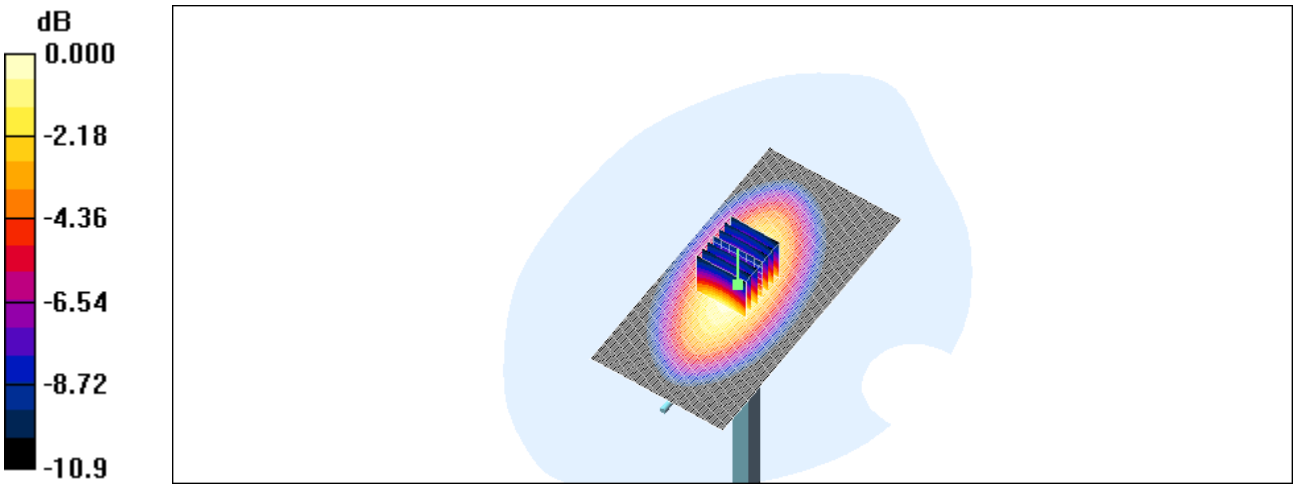

0 dB = 2.89mW/g

Date/Time: 6/6/2008 12:40:55

Test Laboratory: ETS PRODUCT SERVICE AG

Dipol Valid.1900(h)_250mW_6.6.08

DUT: Dipole 1900 MHz; Type: D1900V2; Serial: 5d025

Communication System: CW; Frequency: 1900 MHz;Duty Cycle: 1:1
Medium: Head 1900 MHz Medium parameters used: f = 1900 MHz; σ = 1.42 mho/m; ε_r = 39.9; ρ = 1000 kg/m^3
Phantom section: Flat Section

DASY4 Configuration:

- Probe: ET3DV6 - SN1711; ConvF(5.22, 5.22, 5.22); Calibrated: 9/19/2007
- Sensor-Surface: 4mm (Mechanical And Optical Surface Detection)
- Electronics: DAE3 Sn522; Calibrated: 9/18/2007
- Phantom: SAM 12; Type: TP-1217; Serial: QD000P40CA
- Measurement SW: DASY4, V4.7 Build 55; Postprocessing SW: SEMCAD, V1.8 Build 176

Dipol 1900 (250mW)/Area Scan (61x81x1): Measurement grid: dx=10mm, dy=10mm
Maximum value of SAR (interpolated) = 11.8 mW/g

Dipol 1900 (250mW)/Zoom Scan (7x7x7)/Cube 0: Measurement grid: dx=5mm, dy=5mm, dz=5mm
Reference Value = 96.1 V/m; Power Drift = -0.064 dB
Peak SAR (extrapolated) = 18.5 W/kg
SAR(1 g) = 10.3 mW/g; SAR(10 g) = 5.33 mW/g
Maximum value of SAR (measured) = 11.7 mW/g

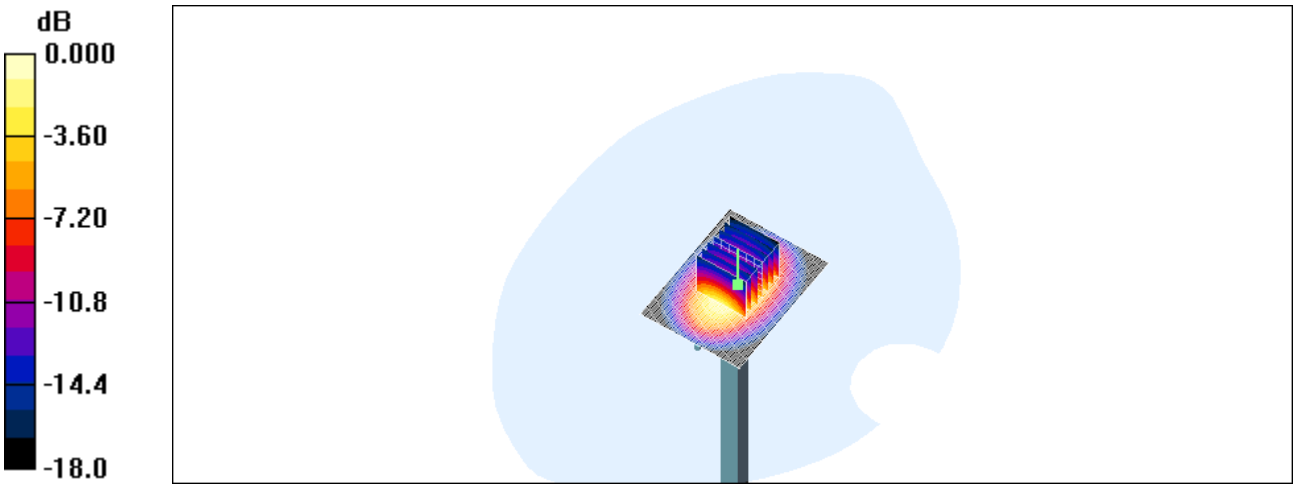

0 dB = 11.7mW/g

Date/Time: 6/25/2008 09:16:50

Test Laboratory: ETS PRODUCT SERVICE AG

Dipol Valid.900 (m)_250mW_25.06.08

DUT: Dipole 900 MHz; Type: D900V2; Serial: 164

Communication System: CW; Frequency: 900 MHz;Duty Cycle: 1:1
Medium: Muscle 900 MHz Medium parameters used: f = 900 MHz; σ = 1.01 mho/m; ε_r = 54.1; ρ = 1000 kg/m^3
Phantom section: Flat Section

DASY4 Configuration:

- Probe: ET3DV6 - SN1711; ConvF(6.04, 6.04, 6.04); Calibrated: 9/19/2007
- Sensor-Surface: 4mm (Mechanical And Optical Surface Detection)
- Electronics: DAE3 Sn522; Calibrated: 9/18/2007
- Phantom: SAM 12; Type: TP-1217; Serial: QD000P40CA
- Measurement SW: DASY4, V4.7 Build 55; Postprocessing SW: SEMCAD, V1.8 Build 176

Dipol 900 (250mW)/Area Scan (81x161x1): Measurement grid: dx=10mm, dy=10mm
Maximum value of SAR (interpolated) = 2.86 mW/g

Dipol 900 (250mW)/Zoom Scan (7x7x7)/Cube 0: Measurement grid: dx=5mm, dy=5mm, dz=5mm
Reference Value = 54.5 V/m; Power Drift = -0.070 dB
Peak SAR (extrapolated) = 3.63 W/kg
SAR(1 g) = 2.6 mW/g; SAR(10 g) = 1.7 mW/g
Maximum value of SAR (measured) = 2.84 mW/g

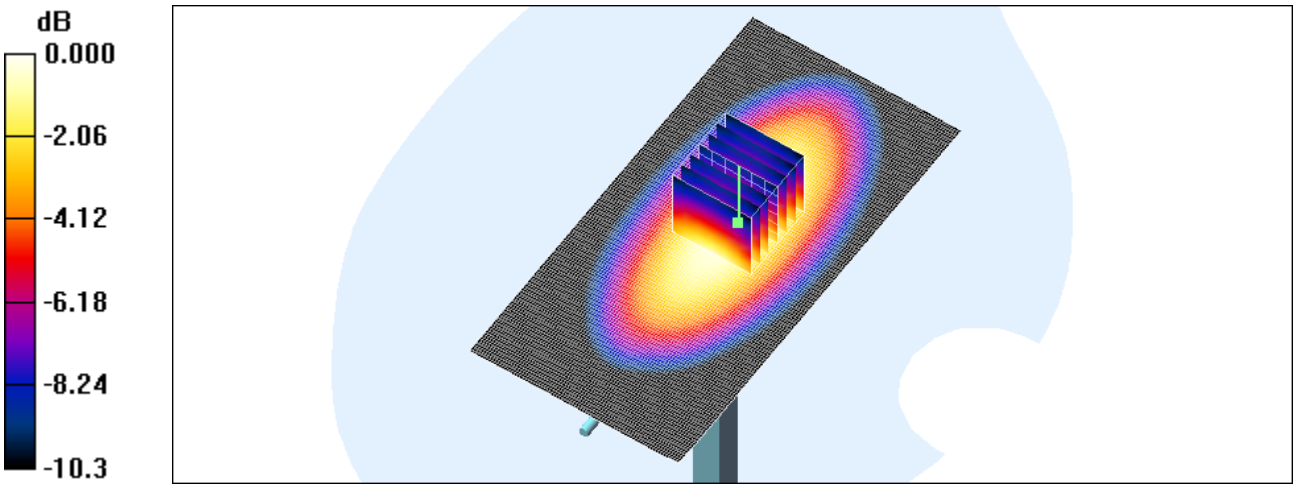

0 dB = 2.84mW/g

Date/Time: 6/25/2008 06:54:05

Test Laboratory: ETS PRODUCT SERVICE AG

Dipol Valid.900 (h)_250mW_25.06.08

DUT: Dipole 900 MHz; Type: D900V2; Serial: 164

Communication System: CW; Frequency: 900 MHz;Duty Cycle: 1:1
Medium: Head 900 MHz Medium parameters used: f = 900 MHz; σ = 0.944 mho/m; ε_r = 40.5; ρ = 1000 kg/m^3
Phantom section: Flat Section

DASY4 Configuration:

- Probe: ET3DV6 - SN1711; ConvF(6.58, 6.58, 6.58); Calibrated: 9/19/2007
- Sensor-Surface: 4mm (Mechanical And Optical Surface Detection)
- Electronics: DAE3 Sn522; Calibrated: 9/18/2007
- Phantom: SAM 12; Type: TP-1217; Serial: QD000P40CA
- Measurement SW: DASY4, V4.7 Build 55; Postprocessing SW: SEMCAD, V1.8 Build 176

Dipol 900 (250mW)/Area Scan (81x161x1): Measurement grid: dx=10mm, dy=10mm
Maximum value of SAR (interpolated) = 2.54 mW/g

Dipol 900 (250mW)/Zoom Scan (7x7x7)/Cube 0: Measurement grid: dx=5mm, dy=5mm, dz=5mm
Reference Value = 52.7 V/m; Power Drift = -0.014 dB
Peak SAR (extrapolated) = 3.23 W/kg
SAR(1 g) = 2.31 mW/g; SAR(10 g) = 1.52 mW/g
Maximum value of SAR (measured) = 2.52 mW/g

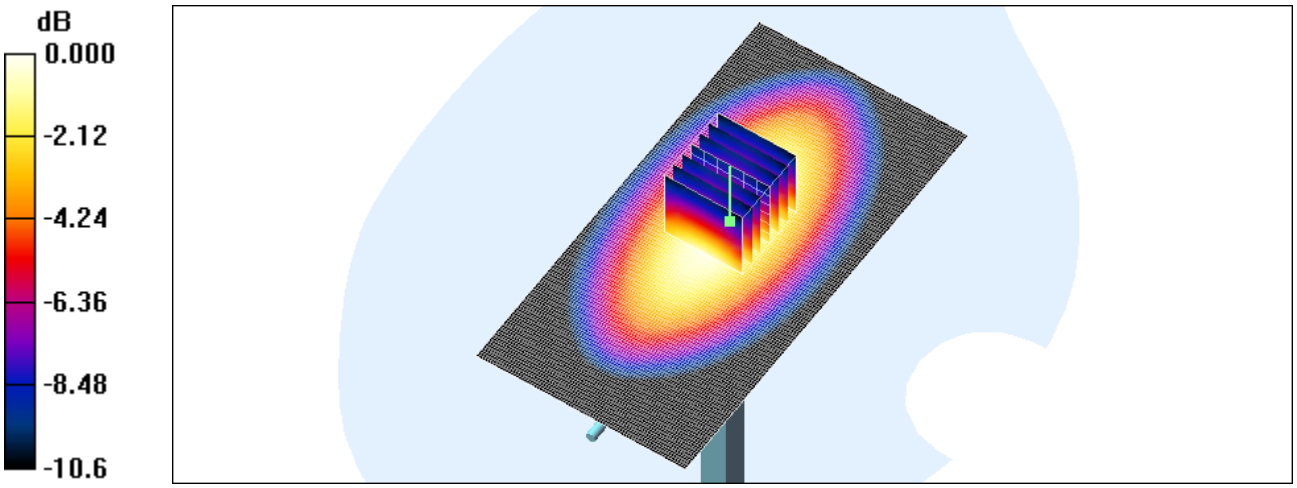

0 dB = 2.52mW/g

Date/Time: 6/25/2008 15:30:55

Test Laboratory: ETS PRODUCT SERVICE AG

Dipol Valid.1900(h)_250mW_25.06.08

DUT: Dipole 1900 MHz; Type: D1900V2; Serial: 5d025

Communication System: CW; Frequency: 1900 MHz;Duty Cycle: 1:1
Medium: Head 1900 MHz Medium parameters used: f = 1900 MHz; σ = 1.42 mho/m; ε_r = 39.9; ρ = 1000 kg/m^3
Phantom section: Flat Section

DASY4 Configuration:

- Probe: ET3DV6 - SN1711; ConvF(5.22, 5.22, 5.22); Calibrated: 9/19/2007
- Sensor-Surface: 4mm (Mechanical And Optical Surface Detection)
- Electronics: DAE3 Sn522; Calibrated: 9/18/2007
- Phantom: SAM 12; Type: TP-1217; Serial: QD000P40CA
- Measurement SW: DASY4, V4.7 Build 55; Postprocessing SW: SEMCAD, V1.8 Build 176

Dipol 1900 (250mW)/Area Scan (61x81x1): Measurement grid: dx=10mm, dy=10mm
Maximum value of SAR (interpolated) = 10.9 mW/g

Dipol 1900 (250mW)/Zoom Scan (7x7x7)/Cube 0: Measurement grid: dx=5mm, dy=5mm, dz=5mm
Reference Value = 96.1 V/m; Power Drift = -0.001 dB
Peak SAR (extrapolated) = 17.2 W/kg
SAR(1 g) = 9.75 mW/g; SAR(10 g) = 4.69 mW/g
Maximum value of SAR (measured) = 10.5 mW/g

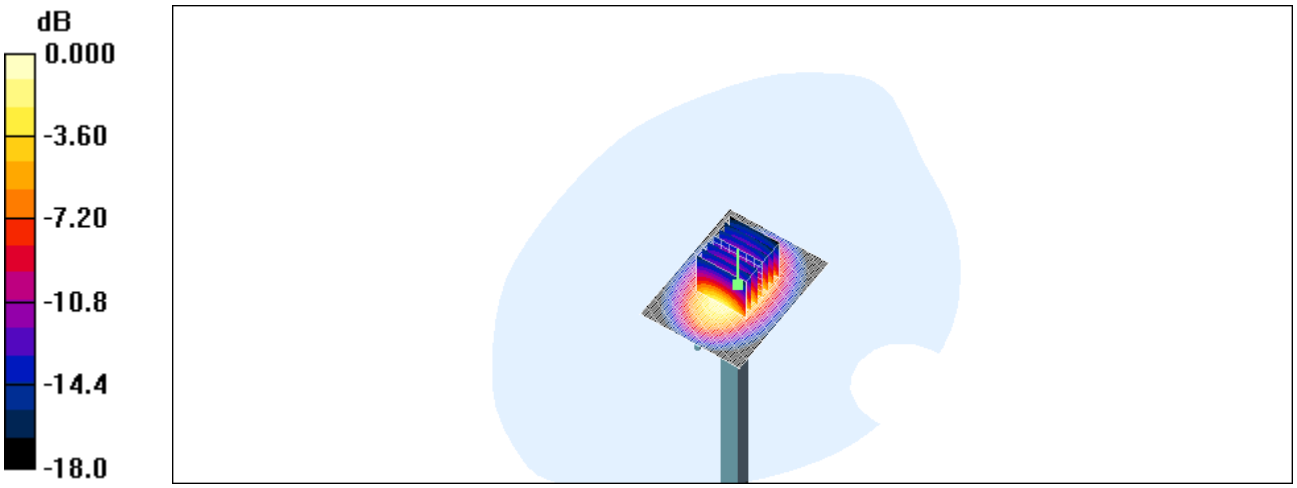

0 dB = 10.9mW/g

Date/Time: 6/23/2008 12:40:55

Test Laboratory: ETS PRODUCT SERVICE AG

Dipol Valid.1900(h)_250mW_23.06.08

DUT: Dipole 1900 MHz; Type: D1900V2; Serial: 5d025

Communication System: CW; Frequency: 1900 MHz;Duty Cycle: 1:1
Medium: Head 1900 MHz Medium parameters used: f = 1900 MHz; σ = 1.42 mho/m; ε_r = 39.9; ρ = 1000 kg/m^3
Phantom section: Flat Section

DASY4 Configuration:

- Probe: ET3DV6 - SN1711; ConvF(5.22, 5.22, 5.22); Calibrated: 9/19/2007
- Sensor-Surface: 4mm (Mechanical And Optical Surface Detection)
- Electronics: DAE3 Sn522; Calibrated: 9/18/2007
- Phantom: SAM 12; Type: TP-1217; Serial: QD000P40CA
- Measurement SW: DASY4, V4.7 Build 55; Postprocessing SW: SEMCAD, V1.8 Build 176

Dipol 1900 (250mW)/Area Scan (61x81x1): Measurement grid: dx=10mm, dy=10mm
Maximum value of SAR (interpolated) = 10.8 mW/g

Dipol 1900 (250mW)/Zoom Scan (7x7x7)/Cube 0: Measurement grid: dx=5mm, dy=5mm, dz=5mm
Reference Value = 96.1 V/m; Power Drift = -0.04 dB
Peak SAR (extrapolated) = 17.5 W/kg
SAR(1 g) = 9.45 mW/g; SAR(10 g) = 4.76 mW/g
Maximum value of SAR (measured) = 10.7 mW/g

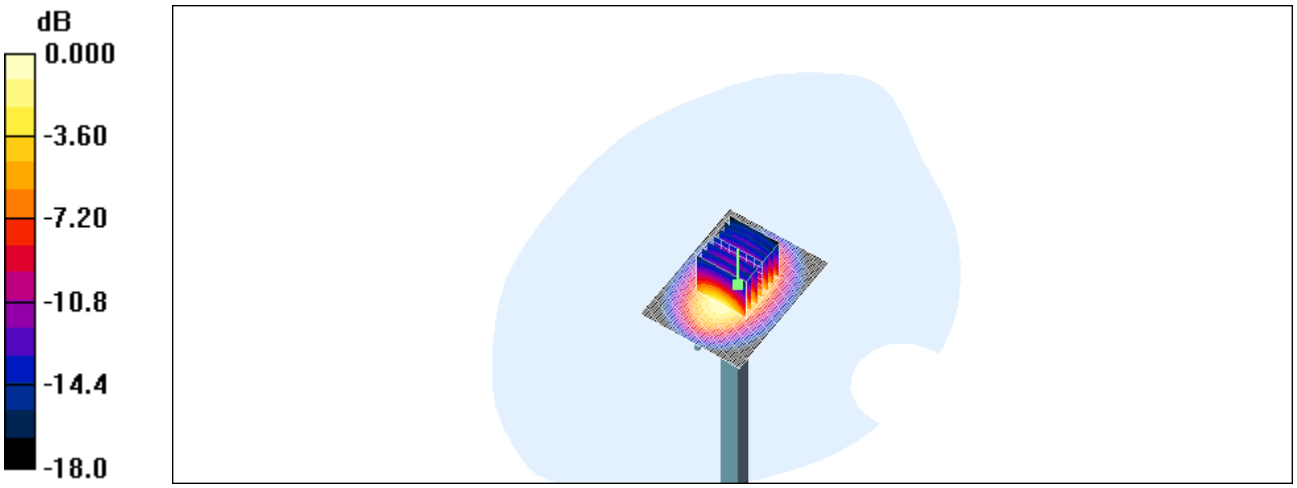

0 dB = 10.7mW/g

Date/Time: 6/5/2008 15:38:48

Test Laboratory: ETS PRODUCT SERVICE AG

850_ch251_left_cheek

DUT: C530; Type: GSM phone; Serial: # 7

Communication System: GSM 850; Frequency: 848.8 MHz;Duty Cycle: 1:8.3
Medium: Head 900 MHz Medium parameters used (interpolated): f = 848.8 MHz; σ = 0.904 mho/m; ε_r = 40.9; ρ = 1000 kg/m^3
Phantom section: Left Section

DASY4 Configuration:

- Probe: ET3DV6 - SN1711; ConvF(6.58, 6.58, 6.58); Calibrated: 9/19/2007
- Sensor-Surface: 4mm (Mechanical And Optical Surface Detection)
- Electronics: DAE3 Sn522; Calibrated: 9/18/2007
- Phantom: SAM 12; Type: TP-1217; Serial: QD000P40CA
- Measurement SW: DASY4, V4.7 Build 55; Postprocessing SW: SEMCAD, V1.8 Build 176

C530/Area Scan (81x141x1): Measurement grid: dx=10mm, dy=10mm

Maximum value of SAR (interpolated) = 0.664 mW/g

C530/Zoom Scan (7x7x7)/Cube 0: Measurement grid: dx=5mm, dy=5mm, dz=5mm
Reference Value = 14.9 V/m; Power Drift = 0.044 dB
Peak SAR (extrapolated) = 0.947 W/kg
SAR(1 g) = 0.637 mW/g; SAR(10 g) = 0.432 mW/g

Maximum value of SAR (measured) = 0.706 mW/g

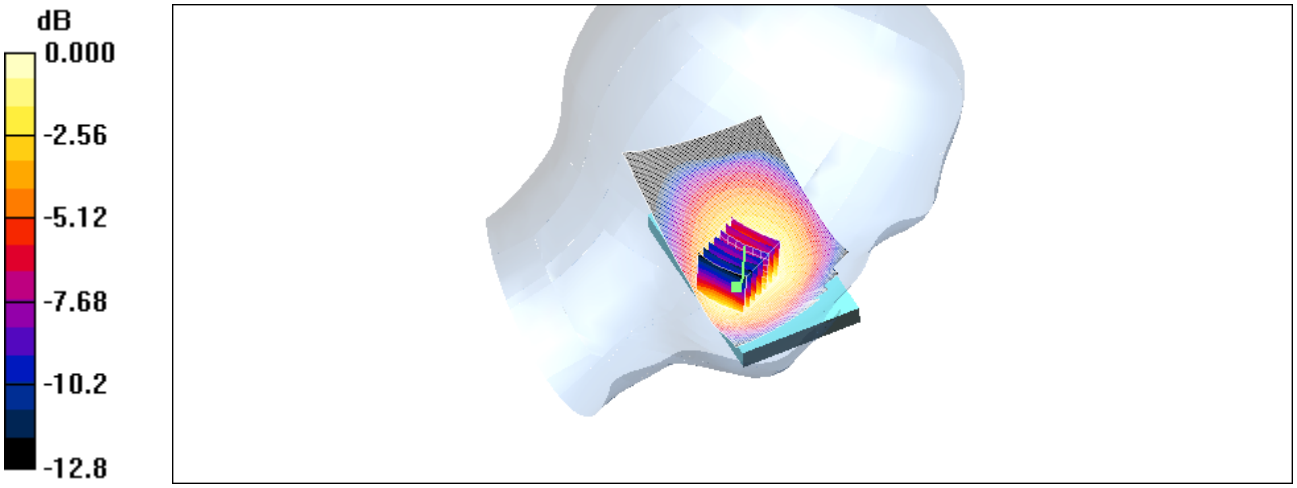

0 dB = 0.706mW/g

Date/Time: 6/5/2008 13:57:38

Test Laboratory: ETS PRODUCT SERVICE AG

850_ch189_right_tilted

DUT: C530; Type: GSM phone; Serial: # 7

Communication System: GSM 850; Frequency: 836.4 MHz;Duty Cycle: 1:8.3
Medium: Head 900 MHz Medium parameters used: f = 836.512 MHz; σ = 0.89 mho/m; ε_r = 41.1; ρ = 1000 kg/m^3
Phantom section: Right Section

DASY4 Configuration:

- Probe: ET3DV6 - SN1711; ConvF(6.58, 6.58, 6.58); Calibrated: 9/19/2007
- Sensor-Surface: 4mm (Mechanical And Optical Surface Detection)
- Electronics: DAE3 Sn522; Calibrated: 9/18/2007
- Phantom: SAM 12; Type: TP-1217; Serial: QD000P40CA
- Measurement SW: DASY4, V4.7 Build 55; Postprocessing SW: SEMCAD, V1.8 Build 176

C530/Area Scan (81x141x1): Measurement grid: dx=10mm, dy=10mm
Maximum value of SAR (interpolated) = 0.597 mW/g

C530/Zoom Scan (7x7x7)/Cube 0: Measurement grid: dx=5mm, dy=5mm, dz=5mm
Reference Value = 19.6 V/m; Power Drift = -0.089 dB
Peak SAR (extrapolated) = 0.660 W/kg
SAR(1 g) = 0.547 mW/g; SAR(10 g) = 0.411 mW/g
Maximum value of SAR (measured) = 0.580 mW/g

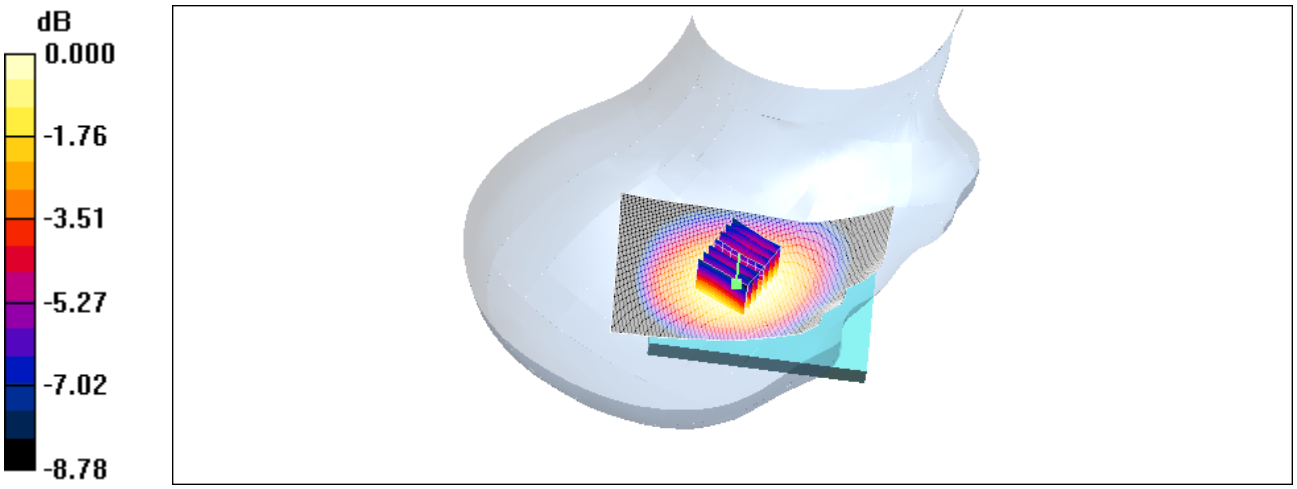

0 dB = 0.580mW/g

Date/Time: 6/5/2008 14:31:10

Test Laboratory: ETS PRODUCT SERVICE AG

850_ch189_right_cheek

DUT: C530; Type: GSM phone; Serial: # 7

Communication System: GSM 850; Frequency: 836.4 MHz;Duty Cycle: 1:8.3
Medium: Head 900 MHz Medium parameters used: f = 836.512 MHz; σ = 0.89 mho/m; ε_r = 41.1; ρ = 1000 kg/m^3
Phantom section: Right Section

DASY4 Configuration:

- Probe: ET3DV6 - SN1711; ConvF(6.58, 6.58, 6.58); Calibrated: 9/19/2007
- Sensor-Surface: 4mm (Mechanical And Optical Surface Detection)
- Electronics: DAE3 Sn522; Calibrated: 9/18/2007
- Phantom: SAM 12; Type: TP-1217; Serial: QD000P40CA
- Measurement SW: DASY4, V4.7 Build 55; Postprocessing SW: SEMCAD, V1.8 Build 176

C530/Area Scan (81x141x1): Measurement grid: dx=10mm, dy=10mm
Maximum value of SAR (interpolated) = 0.829 mW/g

C530/Zoom Scan (7x7x7)/Cube 0: Measurement grid: dx=5mm, dy=5mm, dz=5mm
Reference Value = 13.1 V/m; Power Drift = -0.068 dB
Peak SAR (extrapolated) = 0.940 W/kg
SAR(1 g) = 0.770 mW/g; SAR(10 g) = 0.562 mW/g
Maximum value of SAR (measured) = 0.810 mW/g

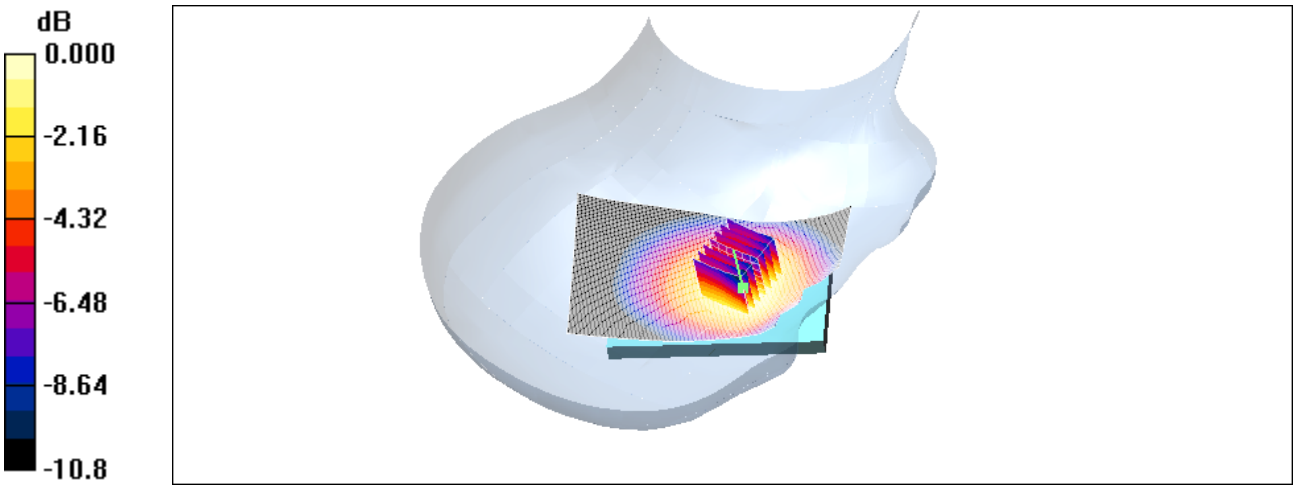

0 dB = 0.810mW/g

Date/Time: 6/5/2008 12:33:41

Test Laboratory: ETS PRODUCT SERVICE AG

850_ch189_left_tilted

DUT: C530; Type: GSM phone; Serial: # 7

Communication System: GSM 850; Frequency: 836.4 MHz;Duty Cycle: 1:8.3
Medium: Head 900 MHz Medium parameters used: f = 836.512 MHz; σ = 0.89 mho/m; ε_r = 41.1; ρ = 1000 kg/m^3
Phantom section: Left Section

DASY4 Configuration:

- Probe: ET3DV6 - SN1711; ConvF(6.58, 6.58, 6.58); Calibrated: 9/19/2007
- Sensor-Surface: 4mm (Mechanical And Optical Surface Detection)
- Electronics: DAE3 Sn522; Calibrated: 9/18/2007
- Phantom: SAM 12; Type: TP-1217; Serial: QD000P40CA
- Measurement SW: DASY4, V4.7 Build 55; Postprocessing SW: SEMCAD, V1.8 Build 176

C530/Area Scan (81x141x1): Measurement grid: dx=10mm, dy=10mm
Maximum value of SAR (interpolated) = 0.574 mW/g

C530/Zoom Scan (7x7x7)/Cube 0: Measurement grid: dx=5mm, dy=5mm, dz=5mm
Reference Value = 19.1 V/m; Power Drift = -0.096 dB
Peak SAR (extrapolated) = 0.647 W/kg
SAR(1 g) = 0.522 mW/g; SAR(10 g) = 0.389 mW/g
Maximum value of SAR (measured) = 0.551 mW/g

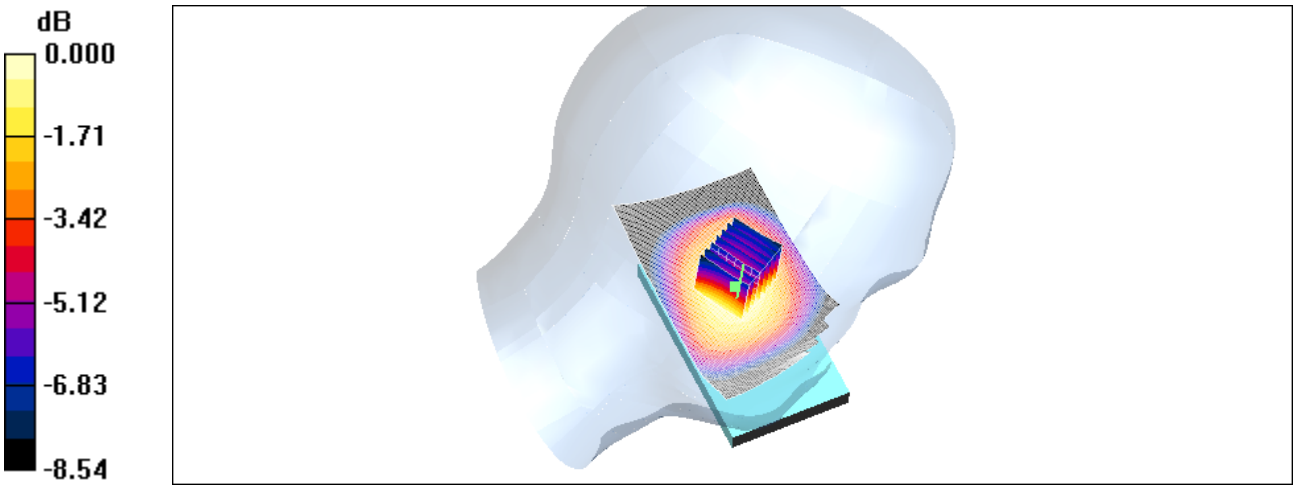

0 dB = 0.551mW/g

Date/Time: 6/25/2008 07:49:30

Test Laboratory: ETS PRODUCT SERVICE AG

850_ch189_left_cheek

DUT: C530; Type: GSM phone; Serial: # 13

Communication System: GSM 850; Frequency: 836.4 MHz;Duty Cycle: 1:8.3
Medium: Head 900 MHz Medium parameters used: f = 836.512 MHz; σ = 0.89 mho/m; ε_r = 41.1; ρ = 1000 kg/m^3
Phantom section: Left Section

DASY4 Configuration:

- Probe: ET3DV6 - SN1711; ConvF(6.58, 6.58, 6.58); Calibrated: 9/19/2007
- Sensor-Surface: 4mm (Mechanical And Optical Surface Detection)
- Electronics: DAE3 Sn522; Calibrated: 9/18/2007
- Phantom: SAM 12; Type: TP-1217; Serial: QD000P40CA
- Measurement SW: DASY4, V4.7 Build 55; Postprocessing SW: SEMCAD, V1.8 Build 176

C530/Area Scan (81x141x1): Measurement grid: dx=10mm, dy=10mm
Maximum value of SAR (interpolated) = 0.898 mW/g

C530/Zoom Scan (7x7x7)/Cube 0: Measurement grid: dx=5mm, dy=5mm, dz=5mm
Reference Value = 13.9 V/m; Power Drift = -0.02 dB
Peak SAR (extrapolated) = 1.22 W/kg
SAR(1 g) = 0.809 mW/g; SAR(10 g) = 0.543 mW/g
Maximum value of SAR (measured) = 0.869 mW/g

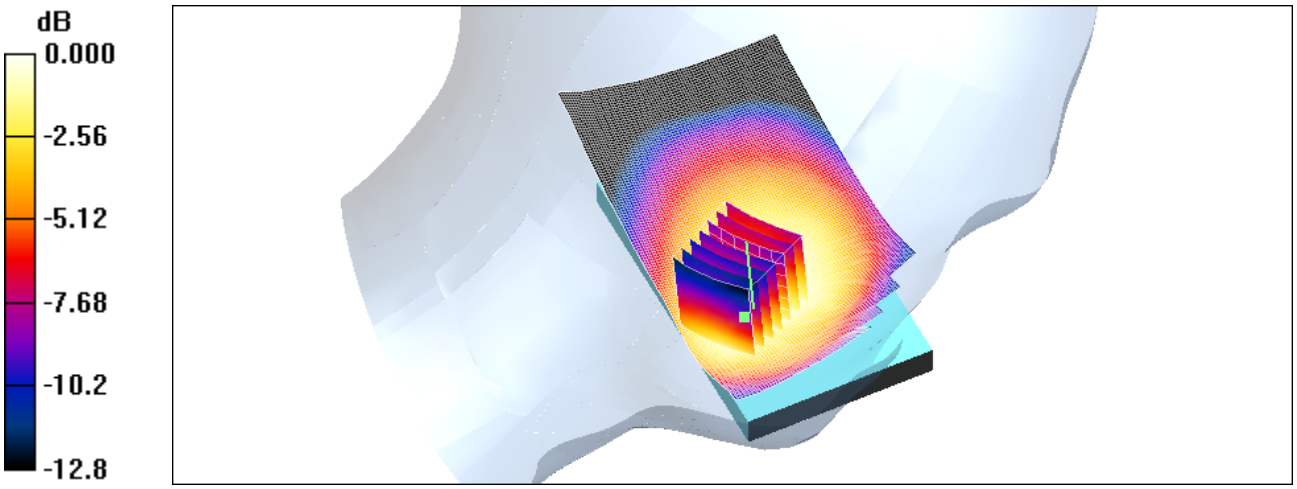

0 dB = 0.869mW/g

Date/Time: 6/5/2008 15:05:58

Test Laboratory: ETS PRODUCT SERVICE AG

850_ch128_left_cheek

DUT: C530; Type: GSM phone; Serial: # 7

Communication System: GSM 850; Frequency: 824.2 MHz;Duty Cycle: 1:8.3
Medium: Head 900 MHz Medium parameters used: f = 824.2 MHz; σ = 0.874 mho/m; ε_r = 41.3; ρ = 1000 kg/m^3
Phantom section: Left Section

DASY4 Configuration:

- Probe: ET3DV6 - SN1711; ConvF(6.58, 6.58, 6.58); Calibrated: 9/19/2007
- Sensor-Surface: 4mm (Mechanical And Optical Surface Detection)
- Electronics: DAE3 Sn522; Calibrated: 9/18/2007
- Phantom: SAM 12; Type: TP-1217; Serial: QD000P40CA
- Measurement SW: DASY4, V4.7 Build 55; Postprocessing SW: SEMCAD, V1.8 Build 176

C530/Area Scan (81x141x1): Measurement grid: dx=10mm, dy=10mm
Maximum value of SAR (interpolated) = 0.674 mW/g

C530/Zoom Scan (7x7x7)/Cube 0: Measurement grid: dx=5mm, dy=5mm, dz=5mm
Reference Value = 14.2 V/m; Power Drift = -0.029 dB
Peak SAR (extrapolated) = 0.964 W/kg
SAR(1 g) = 0.618 mW/g; SAR(10 g) = 0.427 mW/g

Maximum value of SAR (measured) = 0.667 mW/g

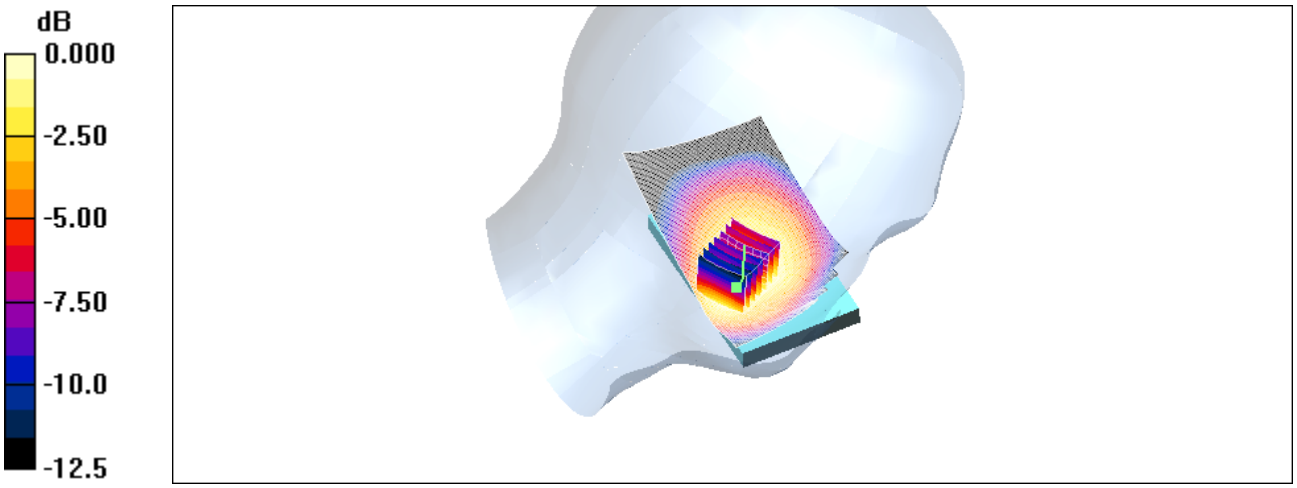

0 dB = 0.667mW/g

Date/Time: 6/4/2008 14:23:06

Test Laboratory: ETS PRODUCT SERVICE AG

850_flat_ch251_back_10mm

DUT: C530; Type: GSM phone; Serial: # 7

Communication System: GSM 850; Frequency: 848.8 MHz;Duty Cycle: 1:8.3
Medium: Muscle 900 MHz Medium parameters used: f = 848.8 MHz; σ = 0.944 mho/m; ε_r = 54.7; ρ = 1000 kg/m^3
Phantom section: Flat Section

DASY4 Configuration:

- Probe: ET3DV6 - SN1711; ConvF(6.04, 6.04, 6.04); Calibrated: 9/19/2007
- Sensor-Surface: 4mm (Mechanical And Optical Surface Detection)
- Electronics: DAE3 Sn522; Calibrated: 9/18/2007
- Phantom: SAM 12; Type: TP-1217; Serial: QD000P40CA
- Measurement SW: DASY4, V4.7 Build 55; Postprocessing SW: SEMCAD, V1.8 Build 176

C530/Area Scan (81x131x1): Measurement grid: dx=10mm, dy=10mm
Maximum value of SAR (interpolated) = 0.668 mW/g

C530/Zoom Scan (7x7x7)/Cube 0: Measurement grid: dx=5mm, dy=5mm, dz=5mm
Reference Value = 25.4 V/m; Power Drift = 0.023 dB
Peak SAR (extrapolated) = 0.764 W/kg
SAR(1 g) = 0.626 mW/g; SAR(10 g) = 0.460 mW/g
Maximum value of SAR (measured) = 0.665 mW/g

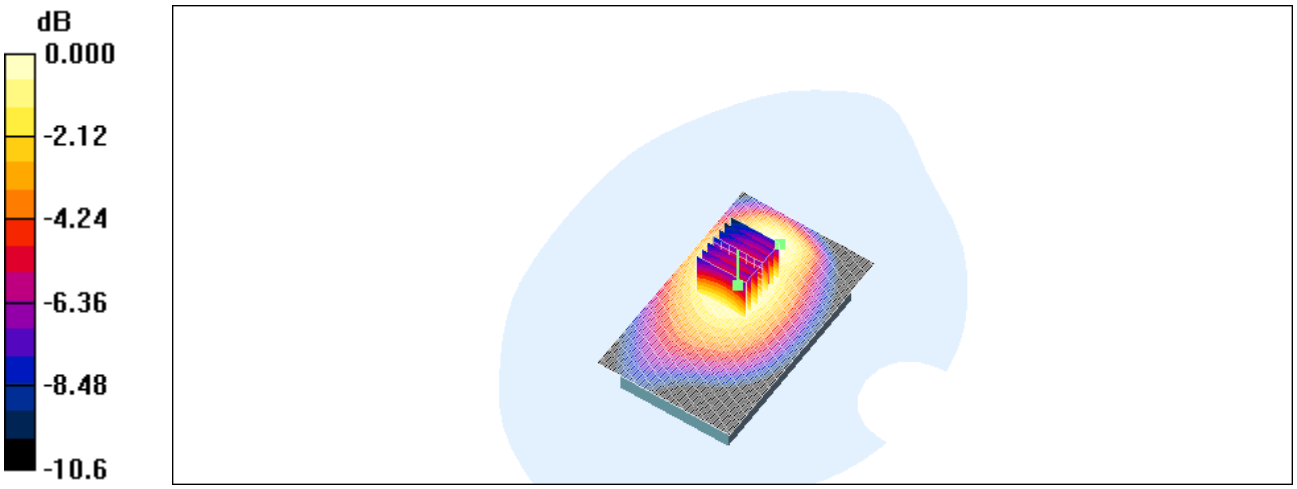

0 dB = 0.665mW/g

Date/Time: 6/4/2008 14:56:08

Test Laboratory: ETS PRODUCT SERVICE AG

850_flat_ch189_front_10mm

DUT: C530; Type: GSM phone; Serial: # 7

Communication System: GSM 850; Frequency: 836.4 MHz;Duty Cycle: 1:8.3
Medium: Muscle 900 MHz Medium parameters used: f = 836.4 MHz; σ = 0.936 mho/m; ε_r = 54.8; ρ = 1000 kg/m^3
Phantom section: Flat Section

DASY4 Configuration:

- Probe: ET3DV6 - SN1711; ConvF(6.04, 6.04, 6.04); Calibrated: 9/19/2007
- Sensor-Surface: 4mm (Mechanical And Optical Surface Detection)
- Electronics: DAE3 Sn522; Calibrated: 9/18/2007
- Phantom: SAM 12; Type: TP-1217; Serial: QD000P40CA
- Measurement SW: DASY4, V4.7 Build 55; Postprocessing SW: SEMCAD, V1.8 Build 176

C530/Area Scan (81x131x1): Measurement grid: dx=10mm, dy=10mm
Maximum value of SAR (interpolated) = 0.658 mW/g

C530/Zoom Scan (7x7x7)/Cube 0: Measurement grid: dx=5mm, dy=5mm, dz=5mm
Reference Value = 23.4 V/m; Power Drift = -0.053 dB
Peak SAR (extrapolated) = 0.846 W/kg
SAR(1 g) = 0.612 mW/g; SAR(10 g) = 0.435 mW/g

Maximum value of SAR (measured) = 0.652 mW/g

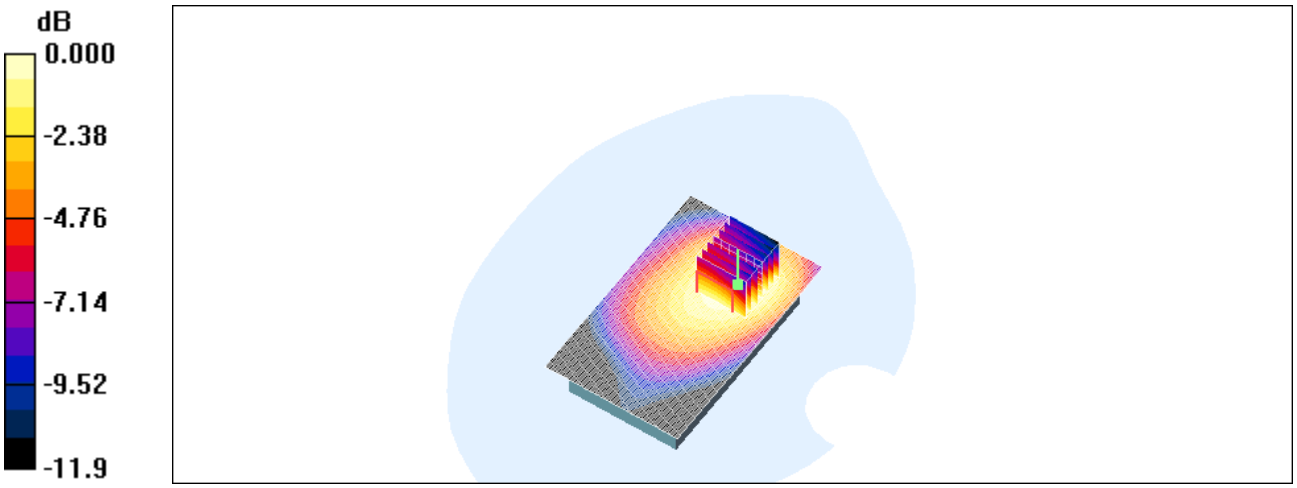

0 dB = 0.652mW/g

Date/Time: 6/25/2008 10:08:40

Test Laboratory: ETS PRODUCT SERVICE AG

850_flat_ch189_back_10mm

DUT: C530; Type: GSM phone; Serial: # 13

Communication System: GSM 850; Frequency: 836.4 MHz;Duty Cycle: 1:8.3
Medium: Muscle 900 MHz Medium parameters used: f = 836.4 MHz; σ = 0.936 mho/m; ε_r = 54.8; ρ = 1000 kg/m^3
Phantom section: Flat Section

DASY4 Configuration:

- Probe: ET3DV6 - SN1711; ConvF(6.04, 6.04, 6.04); Calibrated: 9/19/2007
- Sensor-Surface: 4mm (Mechanical And Optical Surface Detection)
- Electronics: DAE3 Sn522; Calibrated: 9/18/2007
- Phantom: SAM 12; Type: TP-1217; Serial: QD000P40CA
- Measurement SW: DASY4, V4.7 Build 55; Postprocessing SW: SEMCAD, V1.8 Build 176

C530/Area Scan (81x131x1): Measurement grid: dx=10mm, dy=10mm
Maximum value of SAR (interpolated) = 0.730 mW/g

C530/Zoom Scan (7x7x7)/Cube 0: Measurement grid: dx=5mm, dy=5mm, dz=5mm
Reference Value = 28.7 V/m; Power Drift = -0.016 dB
Peak SAR (extrapolated) = 0.915 W/kg
SAR(1 g) = 0.683 mW/g; SAR(10 g) = 0.493 mW/g
Maximum value of SAR (measured) = 0.734 mW/g

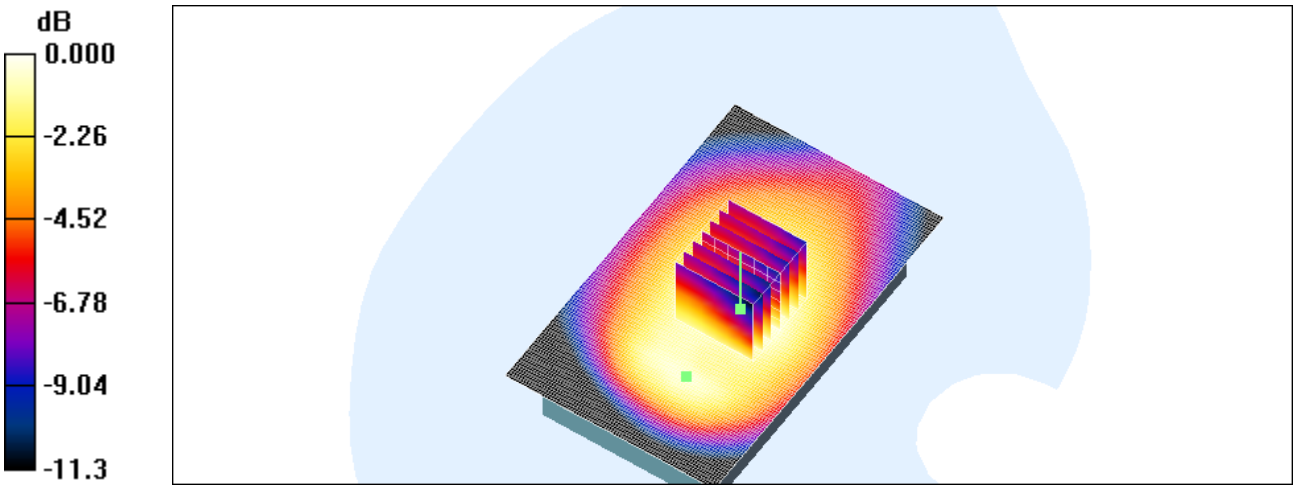

0 dB = 0.734mW/g

Date/Time: 6/25/2008 10:41:11

Test Laboratory: ETS PRODUCT SERVICE AG

850_flat_ch128_back_10mm

DUT: C530; Type: GSM phone; Serial: # 13

Communication System: GSM 850; Frequency: 824.2 MHz;Duty Cycle: 1:8.3
Medium: Muscle 900 MHz Medium parameters used: f = 824.2 MHz; σ = 0.927 mho/m; ε_r = 54.9; ρ = 1000 kg/m^3
Phantom section: Flat Section

DASY4 Configuration:

- Probe: ET3DV6 - SN1711; ConvF(6.04, 6.04, 6.04); Calibrated: 9/19/2007
- Sensor-Surface: 4mm (Mechanical And Optical Surface Detection)
- Electronics: DAE3 Sn522; Calibrated: 9/18/2007
- Phantom: SAM 12; Type: TP-1217; Serial: QD000P40CA
- Measurement SW: DASY4, V4.7 Build 55; Postprocessing SW: SEMCAD, V1.8 Build 176

C530/Area Scan (81x131x1): Measurement grid: dx=10mm, dy=10mm
Maximum value of SAR (interpolated) = 0.709 mW/g

C530/Zoom Scan (7x7x7)/Cube 0: Measurement grid: dx=5mm, dy=5mm, dz=5mm
Reference Value = 27.9 V/m; Power Drift = 0.009 dB
Peak SAR (extrapolated) = 0.865 W/kg
SAR(1 g) = 0.662 mW/g; SAR(10 g) = 0.475 mW/g
Maximum value of SAR (measured) = 0.704 mW/g

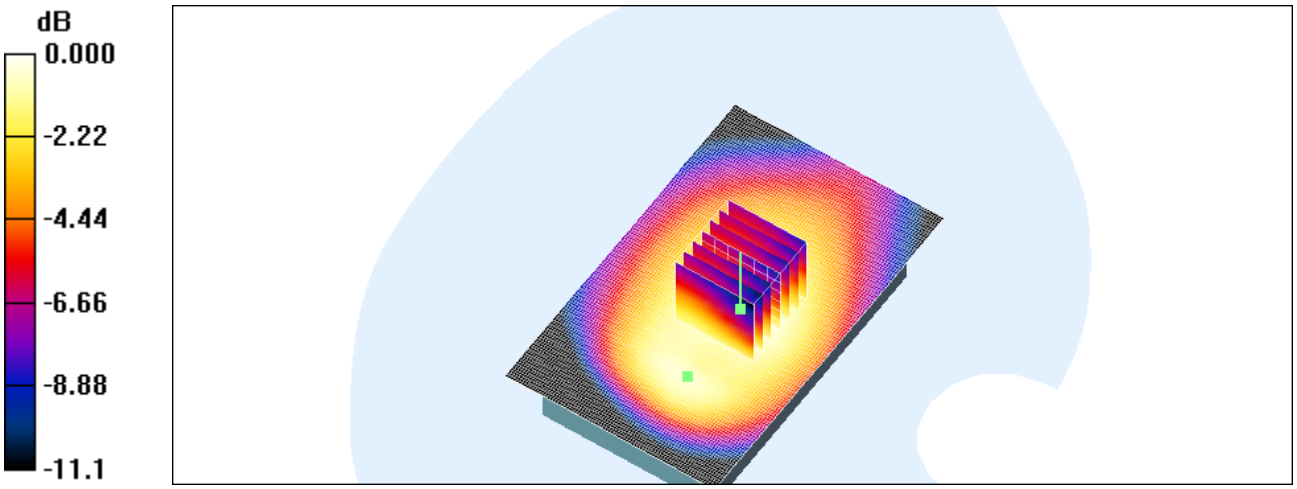

0 dB = 0.704mW/g

Date/Time: 6/6/2008 09:28:45

Test Laboratory: ETS PRODUCT SERVICE AG

1900_ch810_left cheek

DUT: C530; Type: GSM phone; Serial: # 7

Communication System: GSM 1900; Frequency: 1909.8 MHz;Duty Cycle: 1:8.3
Medium: Head 1900 MHz Medium parameters used: f = 1909.8 MHz; σ = 1.43 mho/m; ε_r = 39.8; ρ = 1000 kg/m^3
Phantom section: Left Section

DASY4 Configuration:

- Probe: ET3DV6 - SN1711; ConvF(5.22, 5.22, 5.22); Calibrated: 9/19/2007
- Sensor-Surface: 4mm (Mechanical And Optical Surface Detection)
- Electronics: DAE3 Sn522; Calibrated: 9/18/2007
- Phantom: SAM 12; Type: TP-1217; Serial: QD000P40CA
- Measurement SW: DASY4, V4.7 Build 55; Postprocessing SW: SEMCAD, V1.8 Build 176

C530/Area Scan (81x141x1): Measurement grid: dx=10mm, dy=10mm
Maximum value of SAR (interpolated) = 1.22 mW/g

C530/Zoom Scan (7x7x7)/Cube 0: Measurement grid: dx=5mm, dy=5mm, dz=5mm
Reference Value = 7.55 V/m; Power Drift = -0.078 dB
Peak SAR (extrapolated) = 1.61 W/kg
SAR(1 g) = 1.07 mW/g; SAR(10 g) = 0.638 mW/g
Maximum value of SAR (measured) = 1.19 mW/g

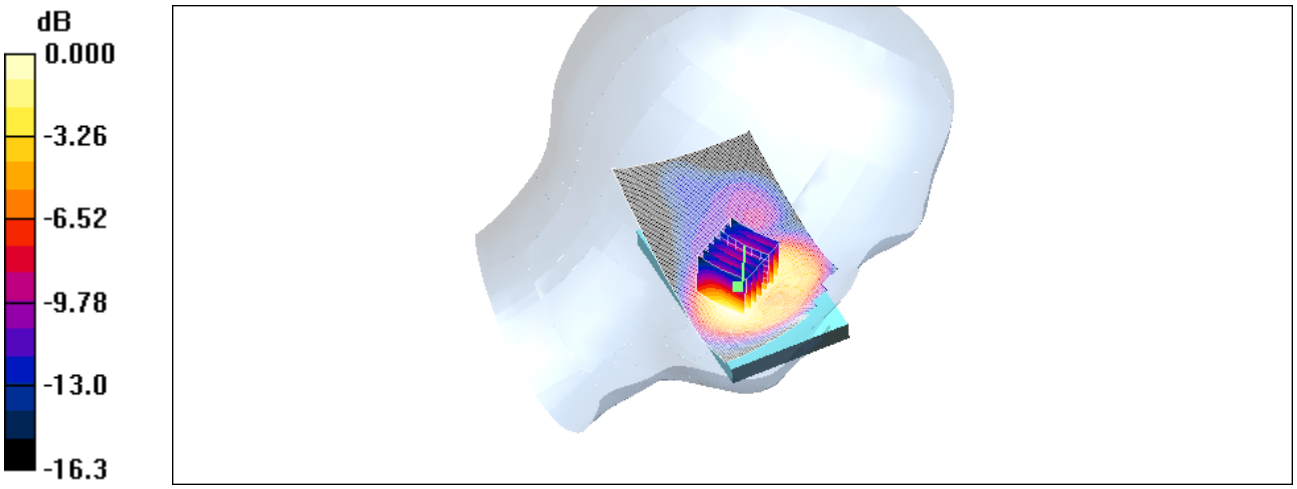

0 dB = 1.19mW/g

Date/Time: 6/6/2008 10:37:59

Test Laboratory: ETS PRODUCT SERVICE AG

1900_ch661_right_tilted

DUT: C530; Type: GSM phone; Serial: # 7

Communication System: GSM 1900; Frequency: 1880 MHz;Duty Cycle: 1:8.3
Medium: Head 1900 MHz Medium parameters used: f = 1880 MHz; σ = 1.4 mho/m; ε_r = 39.9; ρ = 1000 kg/m^3
Phantom section: Right Section

DASY4 Configuration:

- Probe: ET3DV6 - SN1711; ConvF(5.22, 5.22, 5.22); Calibrated: 9/19/2007
- Sensor-Surface: 4mm (Mechanical And Optical Surface Detection)
- Electronics: DAE3 Sn522; Calibrated: 9/18/2007
- Phantom: SAM 12; Type: TP-1217; Serial: QD000P40CA
- Measurement SW: DASY4, V4.7 Build 55; Postprocessing SW: SEMCAD, V1.8 Build 176

C530/Area Scan (81x141x1): Measurement grid: dx=10mm, dy=10mm
Maximum value of SAR (interpolated) = 0.199 mW/g

C530/Zoom Scan (7x7x7)/Cube 0: Measurement grid: dx=5mm, dy=5mm, dz=5mm
Reference Value = 9.88 V/m; Power Drift = -0.029 dB
Peak SAR (extrapolated) = 0.287 W/kg
SAR(1 g) = 0.177 mW/g; SAR(10 g) = 0.103 mW/g
Maximum value of SAR (measured) = 0.196 mW/g

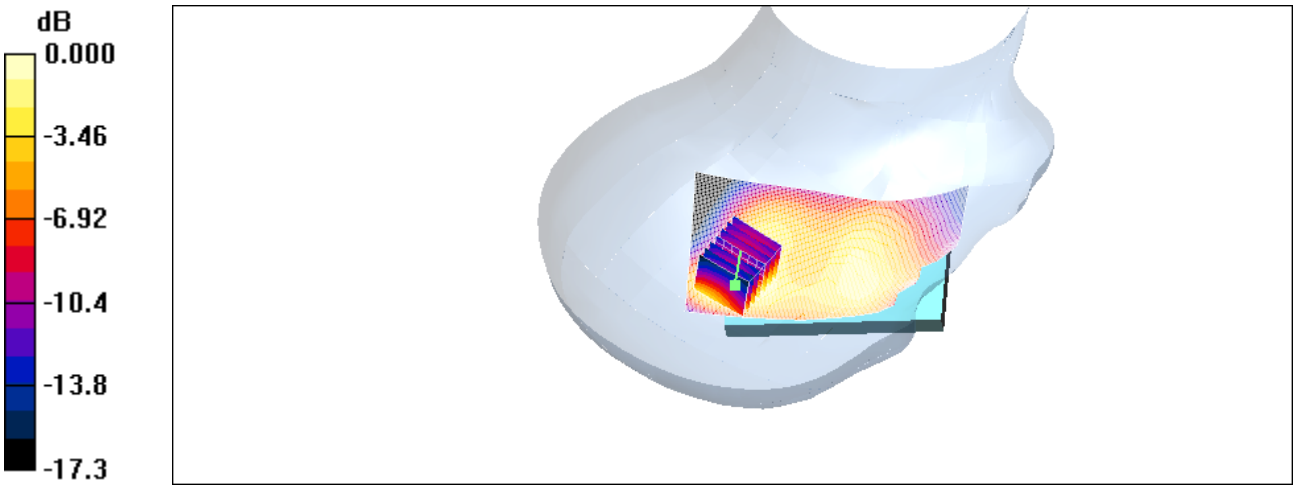

0 dB = 0.196mW/g

Date/Time: 6/6/2008 11:12:07

Test Laboratory: ETS PRODUCT SERVICE AG

1900_ch661_right_cheek

DUT: C530; Type: GSM phone; Serial: # 7

Communication System: GSM 1900; Frequency: 1880 MHz;Duty Cycle: 1:8.3
Medium: Head 1900 MHz Medium parameters used: f = 1880 MHz; σ = 1.4 mho/m; ε_r = 39.9; ρ = 1000 kg/m^3
Phantom section: Right Section

DASY4 Configuration:

- Probe: ET3DV6 - SN1711; ConvF(5.22, 5.22, 5.22); Calibrated: 9/19/2007
- Sensor-Surface: 4mm (Mechanical And Optical Surface Detection)
- Electronics: DAE3 Sn522; Calibrated: 9/18/2007
- Phantom: SAM 12; Type: TP-1217; Serial: QD000P40CA
- Measurement SW: DASY4, V4.7 Build 55; Postprocessing SW: SEMCAD, V1.8 Build 176

C530/Area Scan (81x141x1): Measurement grid: dx=10mm, dy=10mm
Maximum value of SAR (interpolated) = 0.983 mW/g

C530/Zoom Scan (7x7x7)/Cube 0: Measurement grid: dx=5mm, dy=5mm, dz=5mm
Reference Value = 10.4 V/m; Power Drift = 0.003 dB
Peak SAR (extrapolated) = 1.36 W/kg
SAR(1 g) = 0.863 mW/g; SAR(10 g) = 0.495 mW/g

Maximum value of SAR (measured) = 0.953 mW/g

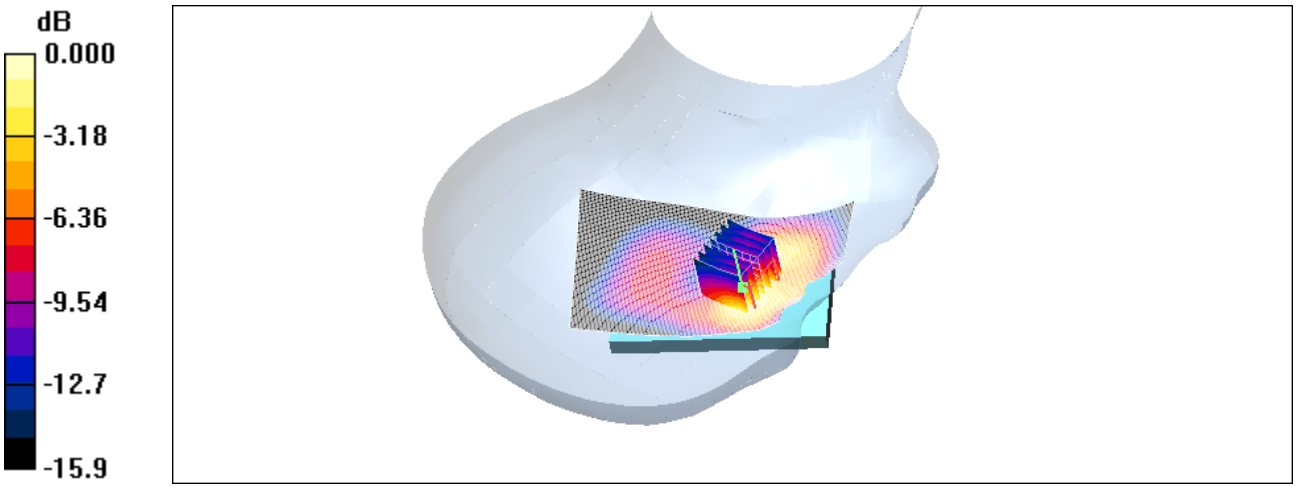

0 dB = 0.953mW/g

Date/Time: 6/23/2008 13:53:58

Test Laboratory: ETS PRODUCT SERVICE AG

1900_ch661_left_cheek

DUT: C530; Type: GSM phone; Serial: # 13

Communication System: GSM 1900; Frequency: 1880 MHz;Duty Cycle: 1:8.3
Medium: Head 1900 MHz Medium parameters used: f = 1880 MHz; σ = 1.4 mho/m; ε_r = 39.9; ρ = 1000 kg/m^3
Phantom section: Left Section

DASY4 Configuration:

- Probe: ET3DV6 - SN1711; ConvF(5.22, 5.22, 5.22); Calibrated: 9/19/2007
- Sensor-Surface: 4mm (Mechanical And Optical Surface Detection)
- Electronics: DAE3 Sn522; Calibrated: 9/18/2007
- Phantom: SAM 12; Type: TP-1217; Serial: QD000P40CA
- Measurement SW: DASY4, V4.7 Build 55; Postprocessing SW: SEMCAD, V1.8 Build 176

C530/Area Scan (81x141x1): Measurement grid: dx=10mm, dy=10mm
Maximum value of SAR (interpolated) = 1.38 mW/g

C530/Zoom Scan (7x7x7)/Cube 0: Measurement grid: dx=5mm, dy=5mm, dz=5mm
Reference Value = 7.97 V/m; Power Drift = -0.01 dB
Peak SAR (extrapolated) = 1.94 W/kg
SAR(1 g) = 1.24 mW/g; SAR(10 g) = 0.693 mW/g
Maximum value of SAR (measured) = 1.39 mW/g

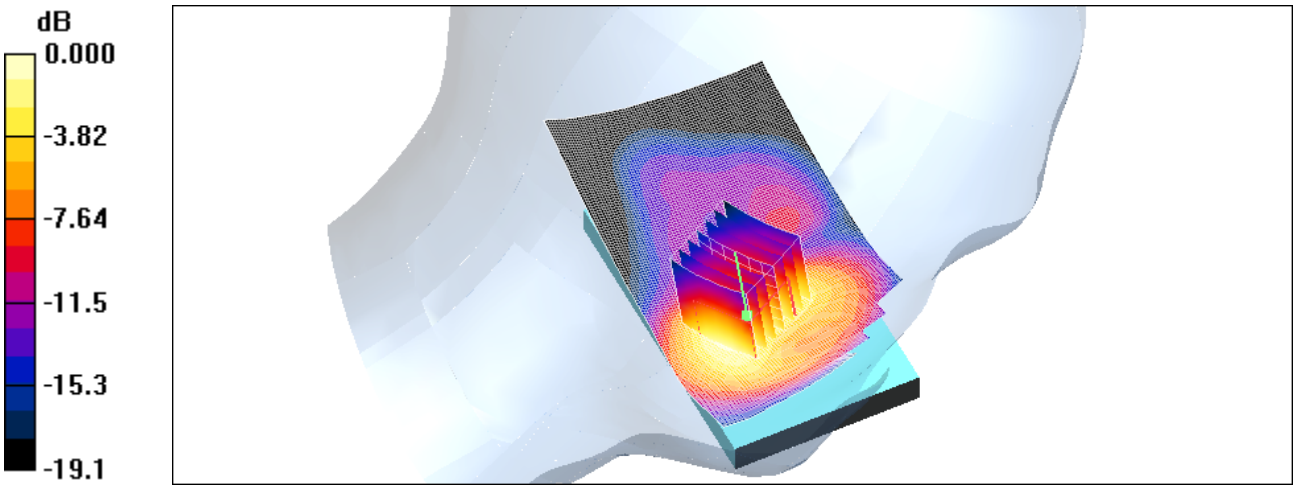

0 dB = 1.39mW/g

Date/Time: 6/23/2008 14:40:04

Test Laboratory: ETS PRODUCT SERVICE AG

1900_ch512_left_cheek

DUT: C530; Type: GSM phone; Serial: # 13

Communication System: GSM 1900; Frequency: 1850.2 MHz;Duty Cycle: 1:8.3
Medium: Head 1900 MHz Medium parameters used: f = 1850.2 MHz; σ = 1.37 mho/m; ε_r = 39.9; ρ = 1000 kg/m^3
Phantom section: Left Section

DASY4 Configuration:

- Probe: ET3DV6 - SN1711; ConvF(5.22, 5.22, 5.22); Calibrated: 9/19/2007
- Sensor-Surface: 4mm (Mechanical And Optical Surface Detection)
- Electronics: DAE3 Sn522; Calibrated: 9/18/2007
- Phantom: SAM 12; Type: TP-1217; Serial: QD000P40CA
- Measurement SW: DASY4, V4.7 Build 55; Postprocessing SW: SEMCAD, V1.8 Build 176

C530/Area Scan (81x141x1): Measurement grid: dx=10mm, dy=10mm
Maximum value of SAR (interpolated) = 1.29 mW/g

C530/Zoom Scan (7x7x7)/Cube 0: Measurement grid: dx=5mm, dy=5mm, dz=5mm
Reference Value = 8.39 V/m; Power Drift = -0.004 dB
Peak SAR (extrapolated) = 1.72 W/kg
SAR(1 g) = 1.17 mW/g; SAR(10 g) = 0.681 mW/g
Maximum value of SAR (measured) = 1.29 mW/g

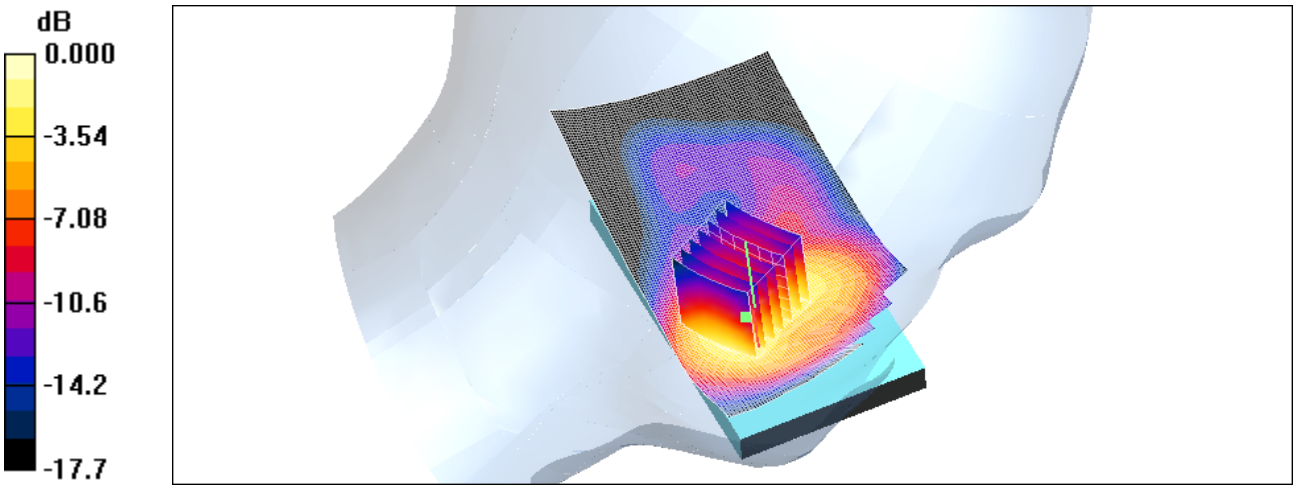

0 dB = 1.29mW/g

Date/Time: 6/9/2008 09:51:44

Test Laboratory: ETS PRODUCT SERVICE AG

1900_flat_ch810_back_10mm

DUT: C530; Type: GSM phone; Serial: # 7

Communication System: GSM 1900; Frequency: 1909.8 MHz;Duty Cycle: 1:8.3
Medium: Muscle 1900 MHz Medium parameters used: f = 1909.8 MHz; σ = 1.59 mho/m; ε_r = 51.9; ρ = 1000 kg/m^3
Phantom section: Flat Section

DASY4 Configuration:

- Probe: ET3DV6 - SN1711; ConvF(4.71, 4.71, 4.71); Calibrated: 9/19/2007
- Sensor-Surface: 4mm (Mechanical And Optical Surface Detection)
- Electronics: DAE3 Sn522; Calibrated: 9/18/2007
- Phantom: SAM 12; Type: TP-1217; Serial: QD000P40CA
- Measurement SW: DASY4, V4.7 Build 55; Postprocessing SW: SEMCAD, V1.8 Build 176

C530/Area Scan (81x131x1): Measurement grid: dx=10mm, dy=10mm
Maximum value of SAR (interpolated) = 0.742 mW/g

C530/Zoom Scan (7x7x7)/Cube 0: Measurement grid: dx=5mm, dy=5mm, dz=5mm
Reference Value = 13.4 V/m; Power Drift = 0.049 dB
Peak SAR (extrapolated) = 1.02 W/kg
SAR(1 g) = 0.639 mW/g; SAR(10 g) = 0.389 mW/g
Maximum value of SAR (measured) = 0.699 mW/g

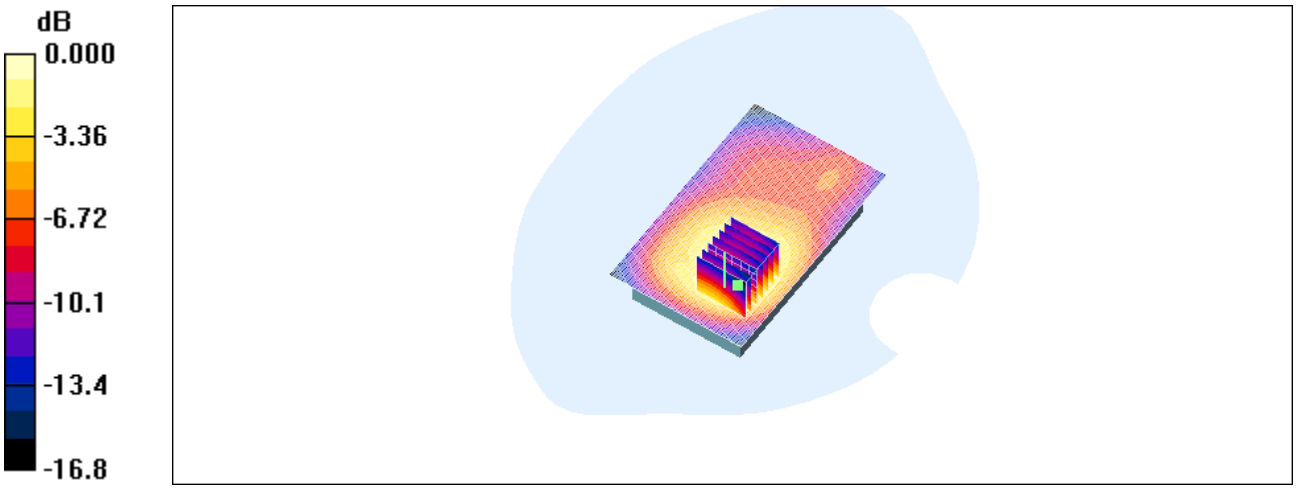

0 dB = 0.699mW/g

Date/Time: 6/9/2008 07:45:23

Test Laboratory: ETS PRODUCT SERVICE AG

1900_flat_ch661_front_10mm

DUT: C530; Type: GSM phone; Serial: # 7

Communication System: GSM 1900; Frequency: 1880 MHz;Duty Cycle: 1:8.3
Medium: Muscle 1900 MHz Medium parameters used: f = 1880 MHz; σ = 1.55 mho/m; ε_r = 51.9; ρ = 1000 kg/m^3
Phantom section: Flat Section

DASY4 Configuration:

- Probe: ET3DV6 - SN1711; ConvF(4.71, 4.71, 4.71); Calibrated: 9/19/2007
- Sensor-Surface: 4mm (Mechanical And Optical Surface Detection)
- Electronics: DAE3 Sn522; Calibrated: 9/18/2007
- Phantom: SAM 12; Type: TP-1217; Serial: QD000P40CA
- Measurement SW: DASY4, V4.7 Build 55; Postprocessing SW: SEMCAD, V1.8 Build 176

C530/Area Scan (81x131x1): Measurement grid: dx=10mm, dy=10mm
Maximum value of SAR (interpolated) = 0.493 mW/g

C530/Zoom Scan (7x7x7)/Cube 0: Measurement grid: dx=5mm, dy=5mm, dz=5mm
Reference Value = 14.9 V/m; Power Drift = -0.021 dB
Peak SAR (extrapolated) = 0.703 W/kg
SAR(1 g) = 0.445 mW/g; SAR(10 g) = 0.288 mW/g

Maximum value of SAR (measured) = 0.475 mW/g

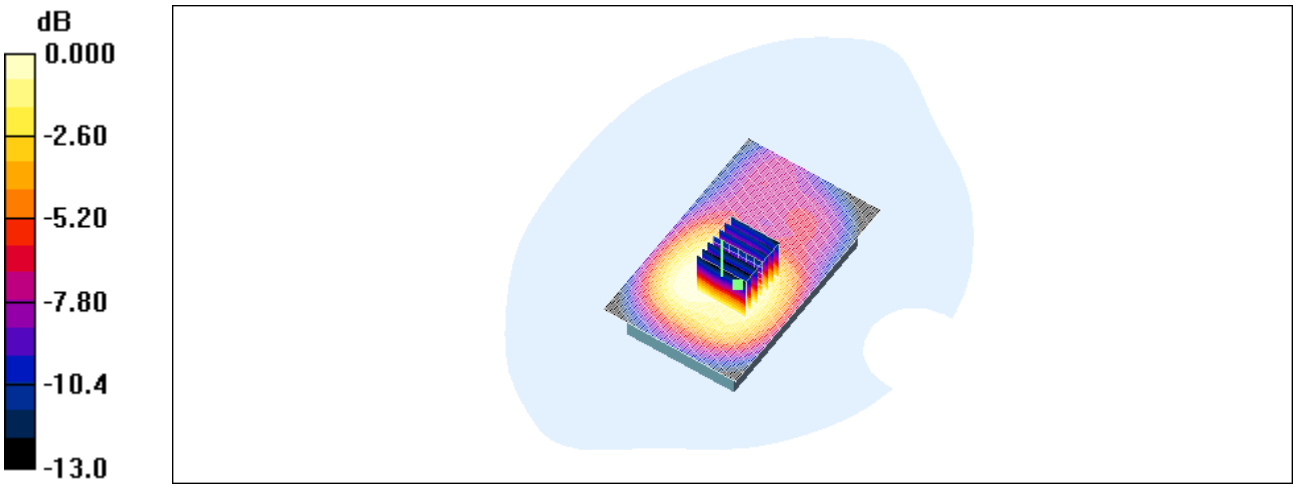

0 dB = 0.475mW/g

Date/Time: 6/9/2008 08:47:13

Test Laboratory: ETS PRODUCT SERVICE AG

1900_flat_ch661_back_10mm

DUT: C530; Type: GSM phone; Serial: # 7

Communication System: GSM 1900; Frequency: 1880 MHz;Duty Cycle: 1:8.3
Medium: Muscle 1900 MHz Medium parameters used: f = 1880 MHz; σ = 1.55 mho/m; ε_r = 51.9; ρ = 1000 kg/m^3
Phantom section: Flat Section

DASY4 Configuration:

- Probe: ET3DV6 - SN1711; ConvF(4.71, 4.71, 4.71); Calibrated: 9/19/2007
- Sensor-Surface: 4mm (Mechanical And Optical Surface Detection)
- Electronics: DAE3 Sn522; Calibrated: 9/18/2007
- Phantom: SAM 12; Type: TP-1217; Serial: QD000P40CA
- Measurement SW: DASY4, V4.7 Build 55; Postprocessing SW: SEMCAD, V1.8 Build 176

C530/Area Scan (81x131x1): Measurement grid: dx=10mm, dy=10mm
Maximum value of SAR (interpolated) = 0.740 mW/g

C530/Zoom Scan (7x7x7)/Cube 0: Measurement grid: dx=5mm, dy=5mm, dz=5mm
Reference Value = 13.7 V/m; Power Drift = 0.029 dB
Peak SAR (extrapolated) = 1.04 W/kg
SAR(1 g) = 0.670 mW/g; SAR(10 g) = 0.412 mW/g
Maximum value of SAR (measured) = 0.731 mW/g

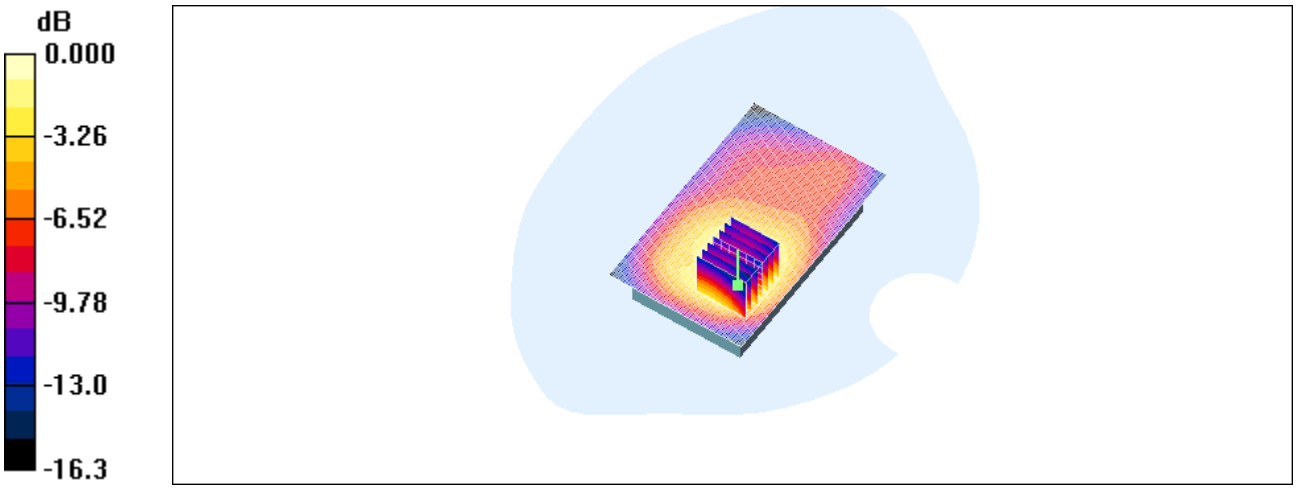

0 dB = 0.731mW/g

Date/Time: 6/9/2008 09:20:15

Test Laboratory: ETS PRODUCT SERVICE AG

1900_flat_ch512_back_10mm

DUT: C530; Type: GSM phone; Serial: # 7

Communication System: GSM 1900; Frequency: 1850.2 MHz;Duty Cycle: 1:8.3
Medium: Muscle 1900 MHz Medium parameters used: f = 1850.2 MHz; σ = 1.51 mho/m; ε_r = 52; ρ = 1000 kg/m^3
Phantom section: Flat Section

DASY4 Configuration:

- Probe: ET3DV6 - SN1711; ConvF(4.71, 4.71, 4.71); Calibrated: 9/19/2007
- Sensor-Surface: 4mm (Mechanical And Optical Surface Detection)
- Electronics: DAE3 Sn522; Calibrated: 9/18/2007
- Phantom: SAM 12; Type: TP-1217; Serial: QD000P40CA
- Measurement SW: DASY4, V4.7 Build 55; Postprocessing SW: SEMCAD, V1.8 Build 176

C530/Area Scan (81x131x1): Measurement grid: dx=10mm, dy=10mm
Maximum value of SAR (interpolated) = 0.779 mW/g

C530/Zoom Scan (7x7x7)/Cube 0: Measurement grid: dx=5mm, dy=5mm, dz=5mm
Reference Value = 14.4 V/m; Power Drift = 0.067 dB
Peak SAR (extrapolated) = 1.08 W/kg
SAR(1 g) = 0.691 mW/g; SAR(10 g) = 0.428 mW/g
Maximum value of SAR (measured) = 0.753 mW/g

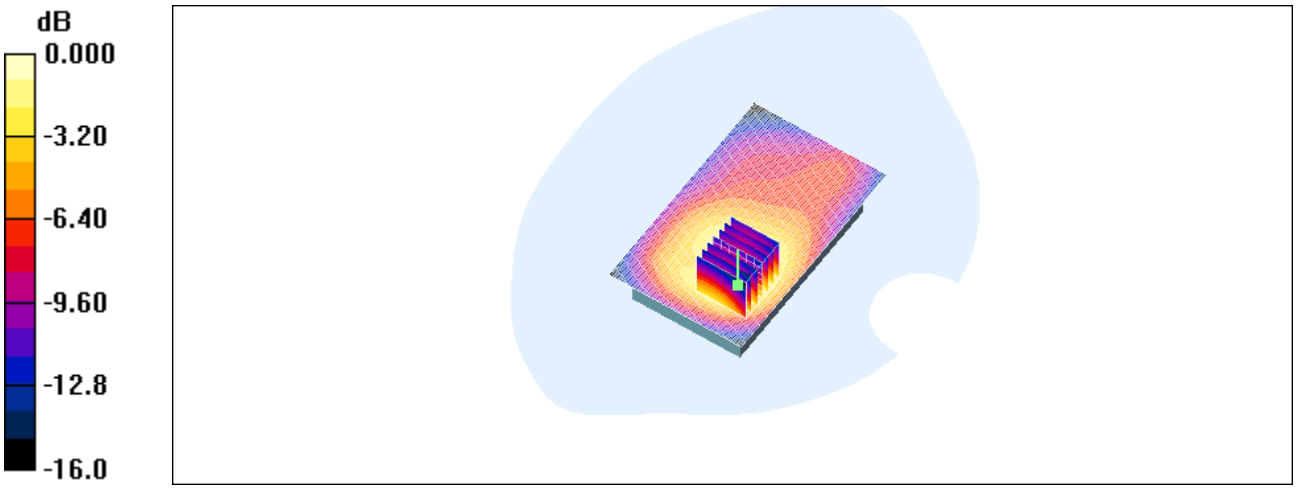

0 dB = 0.753mW/g

Date/Time: 6/5/2008 07:32:34

Test Laboratory: ETS PRODUCT SERVICE AG

850 GPRS_flat_ch128_back_10mm

DUT: C530; Type: GSM phone; Serial: # 7

Communication System: GSM 850; Frequency: 824.2 MHz;Duty Cycle: 1:8.3
Medium: Muscle 900 MHz Medium parameters used: f = 824.2 MHz; σ = 0.927 mho/m; ε_r = 54.9; ρ = 1000 kg/m^3
Phantom section: Flat Section

DASY4 Configuration:

- Probe: ET3DV6 - SN1711; ConvF(6.04, 6.04, 6.04); Calibrated: 9/19/2007
- Sensor-Surface: 4mm (Mechanical And Optical Surface Detection)
- Electronics: DAE3 Sn522; Calibrated: 9/18/2007
- Phantom: SAM 12; Type: TP-1217; Serial: QD000P40CA
- Measurement SW: DASY4, V4.7 Build 55; Postprocessing SW: SEMCAD, V1.8 Build 176

C530/Area Scan (81x131x1): Measurement grid: dx=10mm, dy=10mm
Maximum value of SAR (interpolated) = 1.90 mW/g

C530/Zoom Scan (7x7x7)/Cube 0: Measurement grid: dx=5mm, dy=5mm, dz=5mm
Reference Value = 42.6 V/m; Power Drift = -0.055 dB
Peak SAR (extrapolated) = 2.15 W/kg
SAR(1 g) = 1.55 mW/g; SAR(10 g) = 1.03 mW/g
Maximum value of SAR (measured) = 1.75 mW/g

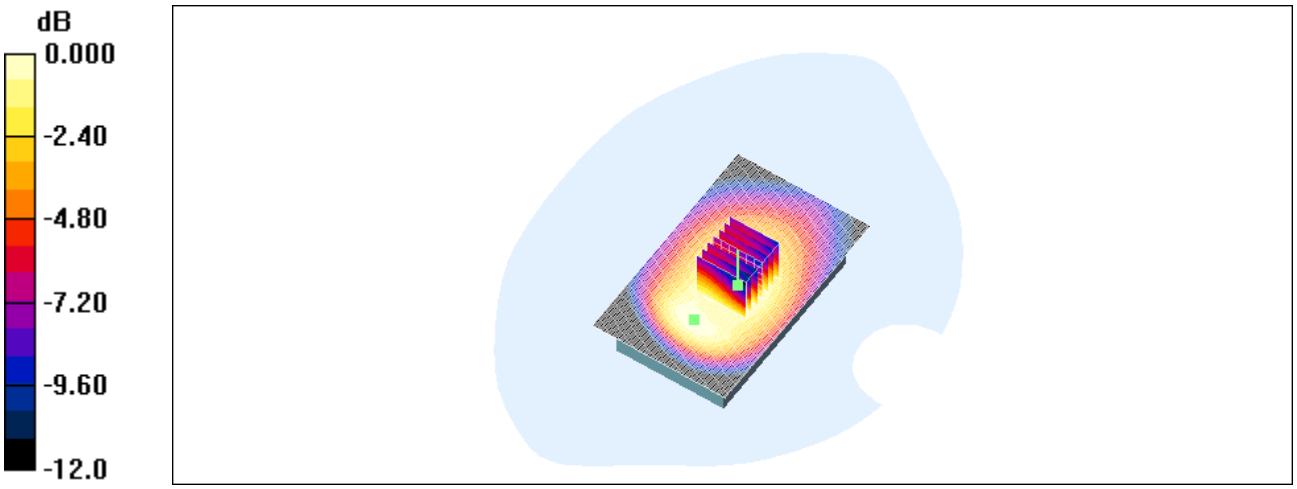

0 dB = 1.75mW/g

Date/Time: 6/25/2008 14:27:43

Test Laboratory: ETS PRODUCT SERVICE AG

GPRS_1900_flat_ch512_back_10mm

DUT: C530; Type: GSM phone; Serial: # 13

Communication System: GSM 1900; Frequency: 1850.2 MHz;Duty Cycle: 1:8.3
Medium: Muscle 1900 MHz Medium parameters used: f = 1850.2 MHz; σ = 1.51 mho/m; ε_r = 52; ρ = 1000 kg/m^3
Phantom section: Flat Section

DASY4 Configuration:

- Probe: ET3DV6 - SN1711; ConvF(4.71, 4.71, 4.71); Calibrated: 9/19/2007
- Sensor-Surface: 4mm (Mechanical And Optical Surface Detection)
- Electronics: DAE3 Sn522; Calibrated: 9/18/2007
- Phantom: SAM 12; Type: TP-1217; Serial: QD000P40CA
- Measurement SW: DASY4, V4.7 Build 55; Postprocessing SW: SEMCAD, V1.8 Build 176

C530/Area Scan (81x131x1): Measurement grid: dx=10mm, dy=10mm
Maximum value of SAR (interpolated) = 1.13 mW/g

C530/Zoom Scan (7x7x7)/Cube 0: Measurement grid: dx=5mm, dy=5mm, dz=5mm
Reference Value = 19.1 V/m; Power Drift = 0.05 dB
Peak SAR (extrapolated) = 1.83 W/kg
SAR(1 g) = 1.16 mW/g; SAR(10 g) = 0.711 mW/g
Maximum value of SAR (measured) = 1.25 mW/g

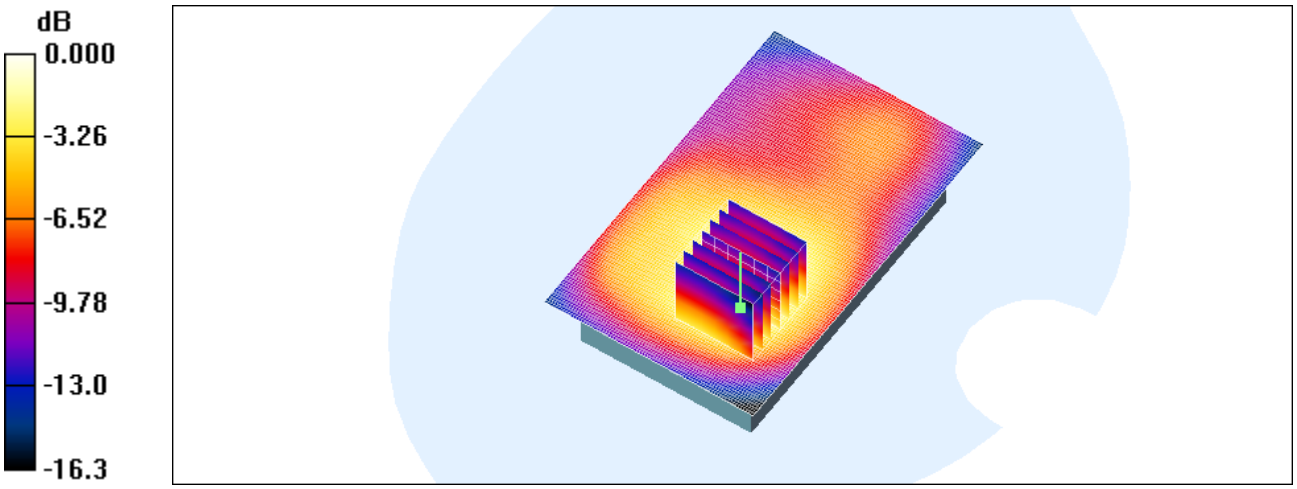

0 dB = 1.25mW/g

Date/Time: 6/25/2008 13:33:50

Test Laboratory: ETS PRODUCT SERVICE AG

EGPRS_850_flat_ch189_back_10mm

DUT: C530; Type: GSM phone; Serial: # 13

Communication System: GSM 850; Frequency: 836.4 MHz;Duty Cycle: 1:8.3
Medium: Muscle 900 MHz Medium parameters used: f = 836.4 MHz; σ = 0.936 mho/m; ε_r = 54.8; ρ = 1000 kg/m^3
Phantom section: Flat Section

DASY4 Configuration:

- Probe: ET3DV6 - SN1711; ConvF(6.04, 6.04, 6.04); Calibrated: 9/19/2007
- Sensor-Surface: 4mm (Mechanical And Optical Surface Detection)
- Electronics: DAE3 Sn522; Calibrated: 9/18/2007
- Phantom: SAM 12; Type: TP-1217; Serial: QD000P40CA
- Measurement SW: DASY4, V4.7 Build 55; Postprocessing SW: SEMCAD, V1.8 Build 176

C530/Area Scan (81x131x1): Measurement grid: dx=10mm, dy=10mm
Maximum value of SAR (interpolated) = 0.386 mW/g

C530/Zoom Scan (7x7x7)/Cube 0: Measurement grid: dx=5mm, dy=5mm, dz=5mm
Reference Value = 20.0 V/m; Power Drift = 0.022 dB
Peak SAR (extrapolated) = 0.490 W/kg
SAR(1 g) = 0.359 mW/g; SAR(10 g) = 0.257 mW/g
Maximum value of SAR (measured) = 0.384 mW/g

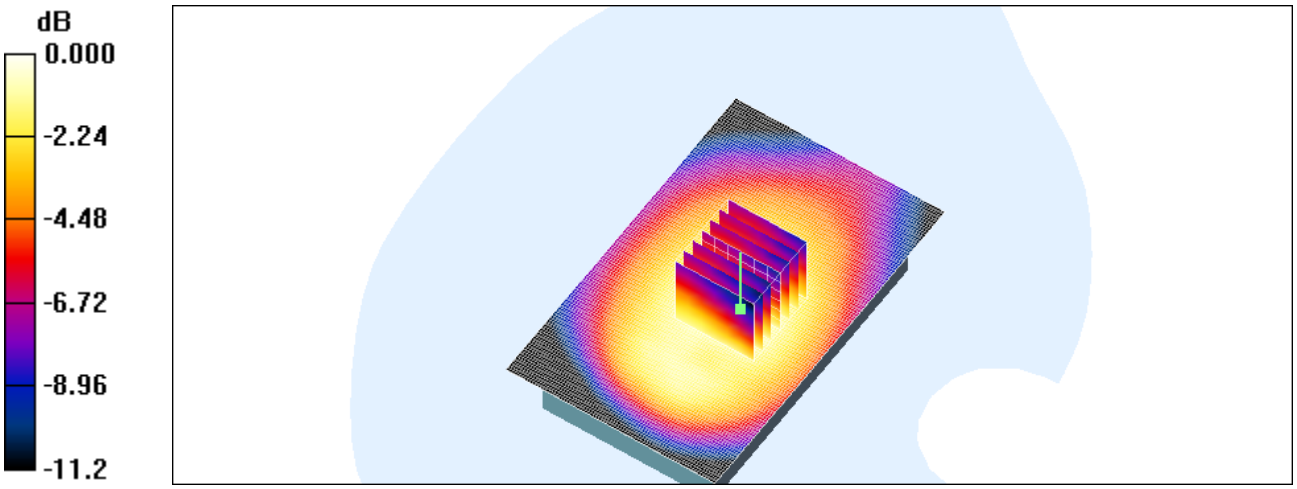

0 dB = 0.384mW/g

Date/Time: 6/25/2008 15:02:10

Test Laboratory: ETS PRODUCT SERVICE AG

EGPRS_1900_flat_ch512_back_10mm

DUT: C530; Type: GSM phone; Serial: # 13

Communication System: GSM 1900; Frequency: 1850.2 MHz;Duty Cycle: 1:8.3
Medium: Muscle 1900 MHz Medium parameters used: f = 1850.2 MHz; σ = 1.51 mho/m; ε_r = 52; ρ = 1000 kg/m^3
Phantom section: Flat Section

DASY4 Configuration:

- Probe: ET3DV6 - SN1711; ConvF(4.71, 4.71, 4.71); Calibrated: 9/19/2007
- Sensor-Surface: 4mm (Mechanical And Optical Surface Detection)
- Electronics: DAE3 Sn522; Calibrated: 9/18/2007
- Phantom: SAM 12; Type: TP-1217; Serial: QD000P40CA
- Measurement SW: DASY4, V4.7 Build 55; Postprocessing SW: SEMCAD, V1.8 Build 176

C530/Area Scan (81x131x1): Measurement grid: dx=10mm, dy=10mm
Maximum value of SAR (interpolated) = 0.514 mW/g

C530/Zoom Scan (7x7x7)/Cube 0: Measurement grid: dx=5mm, dy=5mm, dz=5mm
Reference Value = 12.6 V/m; Power Drift = 0.02 dB
Peak SAR (extrapolated) = 0.757 W/kg
SAR(1 g) = 0.479 mW/g; SAR(10 g) = 0.299 mW/g
Maximum value of SAR (measured) = 0.523 mW/g

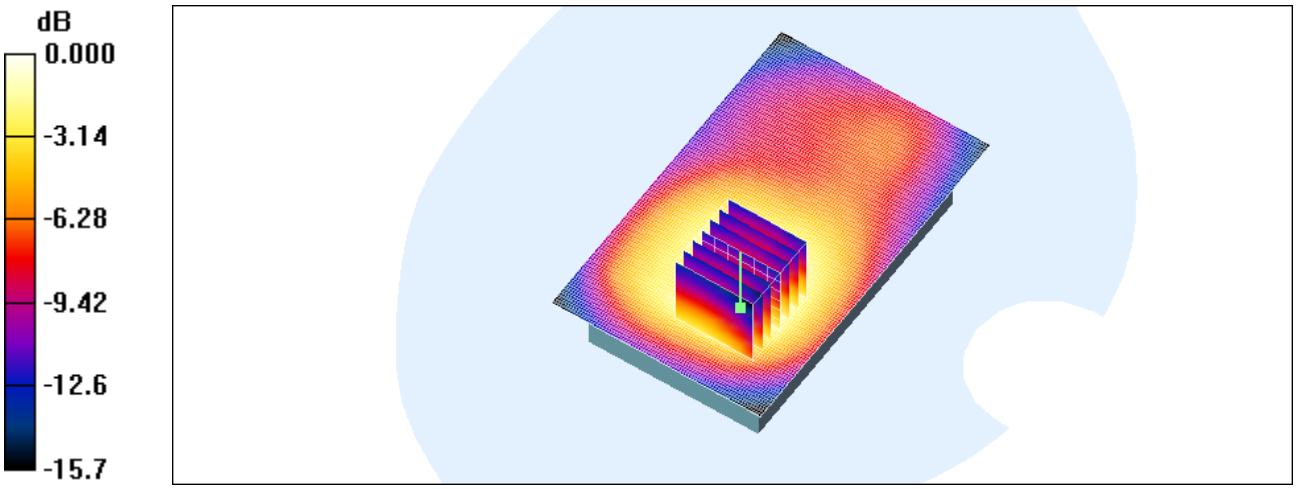

0 dB = 0.523mW/g

Date/Time: 6/5/2008 07:32:34

Test Laboratory: ETS PRODUCT SERVICE AG

850 GPRS_flat_ch128_back_10mm

DUT: C530; Type: UMTS GSM phone; Serial: # 7

Communication System: GSM 850; Frequency: 824.2 MHz;Duty Cycle: 1:8.3
Medium: Muscle 900 MHz Medium parameters used: f = 824.2 MHz; σ = 0.927 mho/m; ε_r = 54.9; ρ = 1000 kg/m^3
Phantom section: Flat Section

DASY4 Configuration:

- Probe: ET3DV6 - SN1711; ConvF(6.04, 6.04, 6.04); Calibrated: 9/19/2007
- Sensor-Surface: 4mm (Mechanical And Optical Surface Detection)
- Electronics: DAE3 Sn522; Calibrated: 9/18/2007
- Phantom: SAM 12; Type: TP-1217; Serial: QD000P40CA
- Measurement SW: DASY4, V4.7 Build 55; Postprocessing SW: SEMCAD, V1.8 Build 176

C530/Area Scan (81x131x1): Measurement grid: dx=10mm, dy=10mm
Maximum value of SAR (interpolated) = 1.90 mW/g
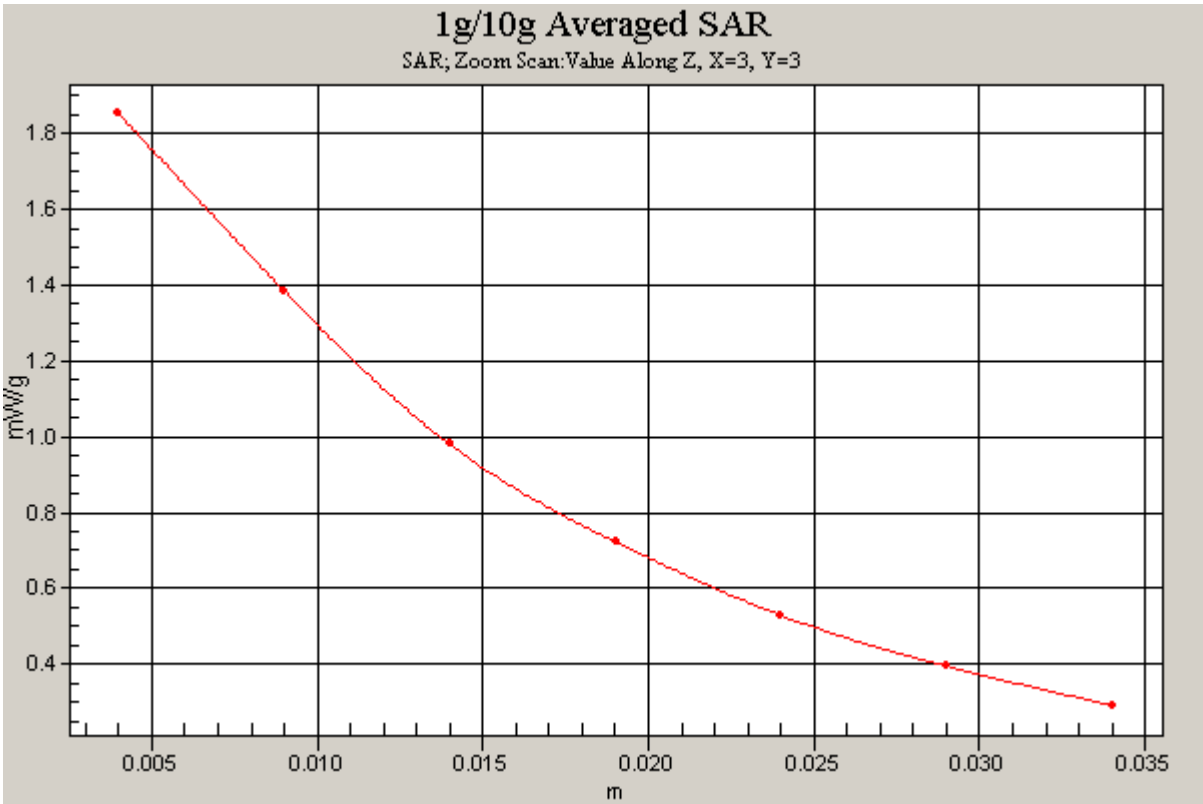
C530/Zoom Scan (7x7x7)/Cube 0: Measurement grid: dx=5mm, dy=5mm, dz=5mm
Reference Value = 45.6 V/m; Power Drift = -0.055 dB
Peak SAR (extrapolated) = 2.35 W/kg
SAR(1 g) = 1.55 mW/g; SAR(10 g) = 1.03 mW/g
Maximum value of SAR (measured) = 1.85 mW/g