Stage IV	events	1.20E+09	RAW fraction	0.9	chaos factor	1.1	Eff. Events	1.19E+09	2/23/98
	Concurrent	Elapsed time	Elapsed time	Data accesse	Data deliver	File Size	Event Size	Source Rep	Target Rep
Mode of Access	Accesses	days	Hours	GB/request	GB/request	GB	GB	1,2,3,4,5,6	1,2,3,4,5,6
Thumbnail									
EDU5	20	7	168	5940	5940	1	0.000005	3	-3
Pick Events									
RAW250 Pick (hot cache)	1000	0.000416667	0.01	0.00025	0.00025	0.00025	0.00025	8	-2
RAW250 Pick (warm cache)	1000	1	24	0.1	0.00025	0.1	0.00025	7	-4
RAW250 Pick (cold cache)	1000	1	24	1	0.00025	1	0.00025	1	-2
EDU50 Pick (hot cache)	1000	0.000416667	0.01	0.00005	0.00005	0.00005	0.00005	8	-2
EDU50 Pick (warm cache)	1000	1	24	0.1	0.00005	0.1	0.00005	7	-4
EDU50 Pick (cold cache)	1000	1	24	1	0.00005	1	0.00005	2	-2
EDU250 Pick(hot cache)	1000	0.000416667	0.01	0.00025	0.00025	0.00025	0.00025	8	-2
EDU250 Pick(warm cache)	1000	1	24	0.1	0.00025	0.1	0.00025	7	-4
EDU250 Pick(cold cache)	1000	1	24	1	0.00025	1	0.00025	2	-2
Files On-demand									
On-demand file RAW250	3	0.0125	0.3	1	1	1	0.00025	1	5
On-demand file EDU50	3	0.0125	0.3	1	1	1	0.00005	2	5
On-demand file EDU250	3	0.0125	0.3	1	1	1	0.00025	2	5
On-demand file-set RAW250	10	0.75	18	10	10	1	0.00025	1	5
On-demand file-set EDU50	10	0.75	18	10	10	1	0.00005	2	5
On-demand file-set EDU250	10	0.75	18	10	10	1	0.00025	2	5
Freight train									
Freight train server RAW250	0.2	28	672	2.97E+05	2.97E+05	1	0.00025	1	4
Freight train server EDU50	0.4	7	336	5.94E+04	5.94E+04	1	0.00005	2	4
Freight train server EDU250	0.2	7	672	2.97E+05	2.97E+05	1	0.00025	2	4
Reconstruction Farm									
Recon Farm Input RAW250	1	1	24	1080	1080	1	0.00025	1	-1
Recon Output EDU5	1	1	24	21.6	21.6	1	0.000005	-1	3
Recon Output EDU50	1	1	24	216	216	1	0.00005	-1	2
Recon Output EDU250	0.2	1	24	1080	1080	1	0.00025	-1	2
Pick on-demand processing	100	1	24				0.00025	-1	8
Derived Data		0							
Generated	10	0.041666667	1	1	1	0.2		5	6
Accessed	10	0.041666667	1	1	1	0.2		6	5
Pick Archive Server								8	7
Aggregate									

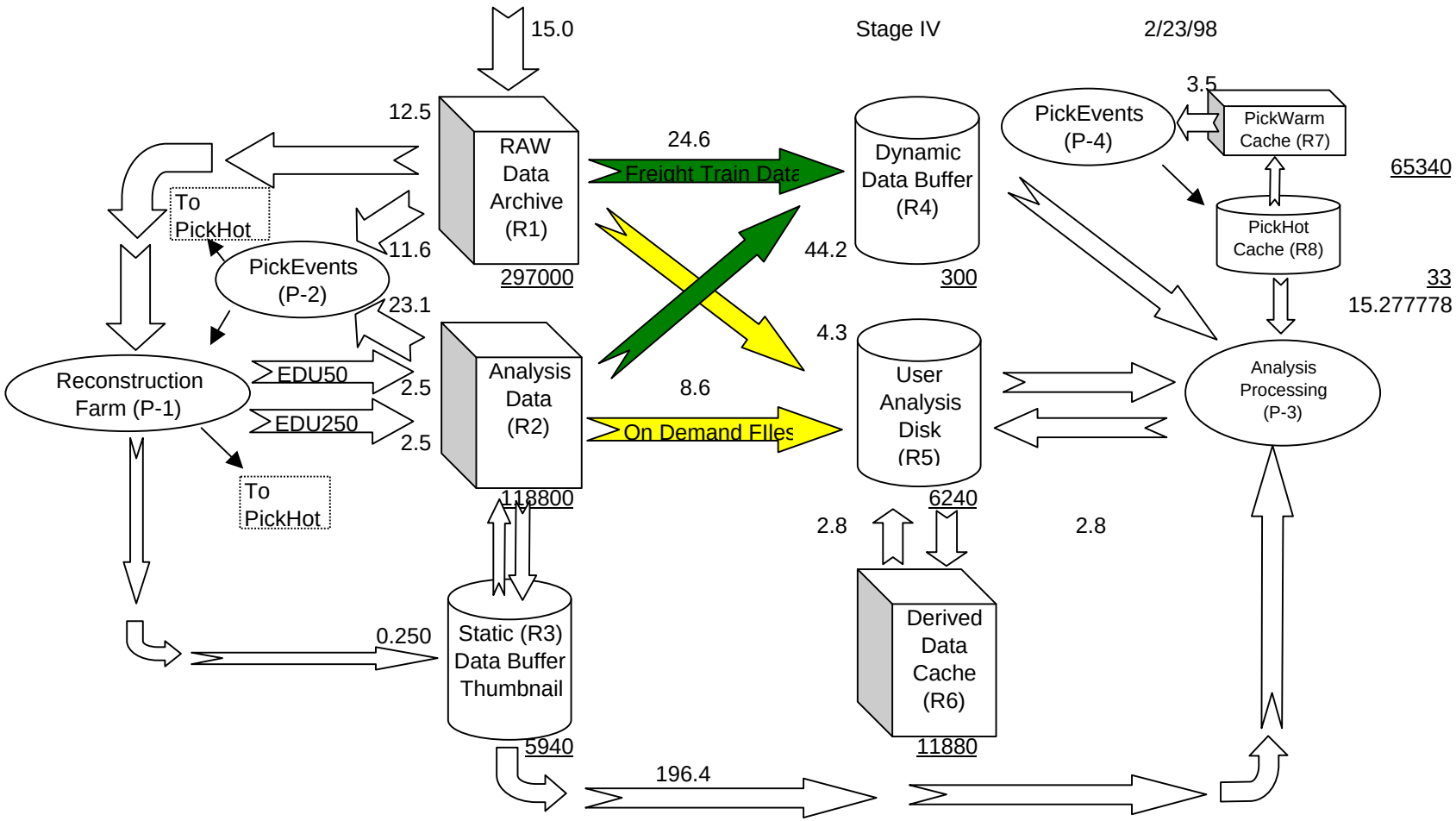
15.0
Stage IV
2/23/98
12.5
RAW Data Archive (R1)
297000
24.6
Freight Train Data
Dynamic Data Buffer (R4)
300
44.2
PickEvents (P-4)
3.5
PickWarm Cache (R7)
65340
PickHot Cache (R8)
33
15.277778
To PickHot
PickEvents (P-2)
11.6
23.1
Reconstruction Farm (P-1)
EDU50
2.5
EDU250
2.5
Analysis Data (R2)
118800
8.6
On Demand FIles
4.3
User Analysis Disk (R5)
6240
Analysis Processing (P-3)
To PickHot
2.8
2.8
Derived Data Cache (R6)
11880
0.250
Static (R3) Data Buffer Thumbnail
5940
196.4

Stage IV	DAQ Rate	50						2/23/98
Mode of Access	R1 BW MBps	R2 BW MBps	R3 BW MBps	R4 BW MBps	R5 BW MBps	R6 BW MBps	R7 BW MBps	R8 BW MBps
Thumbnail	1	2	3	4	5	6	7	8
EDU5	0	0	196.4286	0	0	0	0	0
Pick Events	0	0	0	0	0	0	0	0
RAW250 Pick (hot cache)	0	0	0	0	0	0	0	6.944444
RAW250 Pick (warm cache	0	0	0	0	0	0	1.157407	0
RAW250 Pick (cold cache)	11.57407	0	0	0	0	0	0	0
EDU50 Pick (hot cache)	0	0	0	0	0	0	0	1.388889
EDU50 Pick (warm cache)	0	0	0	0	0	0	1.157407	0
EDU50 Pick (cold cache)	0	11.57407	0	0	0	0	0	0
EDU250 Pick(hot cache)	0	0	0	0	0	0	0	6.944444
EDU250 Pick(warm cache)	0	0	0	0	0	0	1.157407	0
EDU250 Pick(cold cache)	0	11.57407	0	0	0	0	0	0
Files On-demand	0	0	0	0	0	0	0	0
On-demand file RAW250	2.777778	0	0	0	2.777778	0	0	0
On-demand file EDU50	0	2.777778	0	0	2.777778	0	0	0
On-demand file EDU250	0	2.777778	0	0	2.777778	0	0	0
On-demand file-set RAW25	1.54321	0	0	0	1.54321	0	0	0
On-demand file-set EDU50	0	1.54321	0	0	1.54321	0	0	0
On-demand file-set EDU25	0	1.54321	0	0	1.54321	0	0	0
Freight train	0	0	0	0	0	0	0	0
Freight train server RAW25	24.55357	0	0	24.55357	0	0	0	0
Freight train server EDU50	0	19.64286	0	19.64286	0	0	0	0
Freight train server EDU25	0	24.55357	0	24.55357	0	0	0	0
Reconstruction Farm	0	0	0	0	0	0	0	0
Recon Farm Input RAW25	12.5	0	0	0	0	0	0	0
Recon Output EDU5	0	0	0.25	0	0	0	0	0
Recon Output EDU50	0	2.5	0	0	0	0	0	0
Recon Output EDU250	0	2.5	0	0	0	0	0	0
Pick on-demand processin	0	0	0	0	0	0	0	0
Derived Data	0	0	0	0	0	0	0	0
Generated	0	0	0	0	2.777778	2.777778	0	0
Accessed	0	0	0	0	2.777778	2.777778	0	0
Pick Archive Server								
Aggregate	52.94863	80.98655	196.6786	68.75	18.51852	5.555556	3.472222	15.27778

Stage IV

Pick Fraction 0.1 PickHot Days 60 2/23/98

Mode of Access	R1 Size GB	R2 Size GB	R3 Size GB	R4 Size GB	R5 Size GB	R6 Size GB	R7 Size GB	R8 Size GB
Thumbnail	1	2	3	4	5	6	7	8
EDU5			5940	0			0	0
Pick Events			0				0	0
RAW250 Pick (hot cache)			0				0	15
RAW250 Pick (warm cache)			0				29700	0
RAW250 Pick (cold cache)			0				0	0
EDU50 Pick (hot cache)			0				0	3
EDU50 Pick (warm cache)			0				5940	0
EDU50 Pick (cold cache)			0				0	0
EDU250 Pick(hot cache)			0				0	15
EDU250 Pick(warm cache)			0				29700	0
EDU250 Pick(cold cache)			0				0	0
Files On-demand			0				0	0
On-demand file RAW250			0		100		0	0
On-demand file EDU50			0		100		0	0
On-demand file EDU250			0		100		0	0
On-demand file-set RAW250			0				0	0
On-demand file-set EDU50			0				0	0
On-demand file-set EDU250			0				0	0
Freight train			0				0	0
Freight train server RAW250			0	100			0	0
Freight train server EDU50			0	100			0	0
Freight train server EDU250			0	100			0	0
Reconstruction Farm			0				0	0
Recon Farm Input RAW250	297000		0				0	0
Recon Output EDU5			0				0	0
Recon Output EDU50		59400	0				0	0
Recon Output EDU250		59400	0				0	0
Pick on-demand processing			0				0	0
Derived Data			0				0	0
Generated			0		5.94E+03	1.19E+04	0	0
Accessed			0				0	0
Aggregate	297000	118800	5940	300	6240	11880	65340	33