DWG NO	SN	REV

REVISIONS

REV	DESCRIPTION	DATE	APPROVED

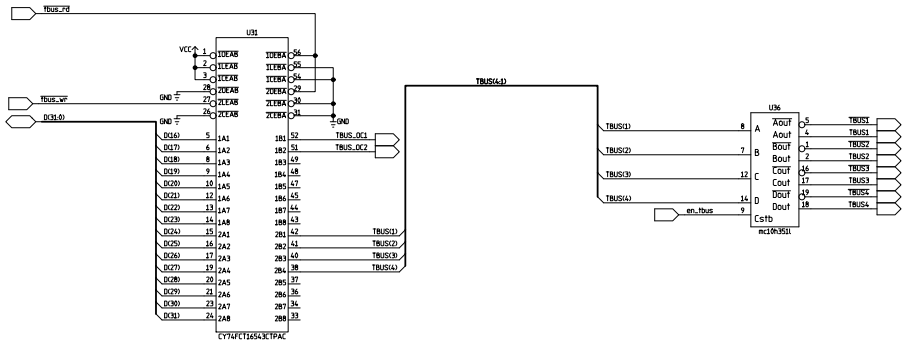

CDF UPGRADE ELECTRONICS	Fermi National Accelerator Lab		
	TRACER TBUS Drivers/Receivers		
Theresa M. Shaw	SIZE D	FSHC NO	DWG NO TMS-TRAC-071197-P14 REV B
RD/EED/EES	SCALE		SHEET 14 of 17

E:\JOBS_TRACER\TRACER_PROD_V2_1\vbdc\tracer.sbk(13;19) Mon Apr 12 09:07:22 1999