DWG NO	SN	REV

REVISIONS

REV	DESCRIPTION	DATE	APPROVED

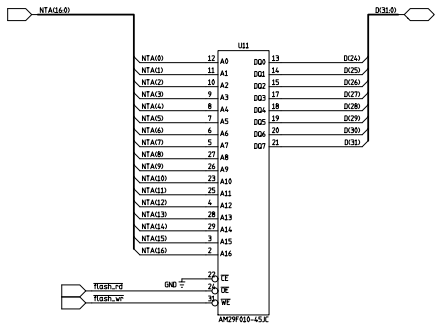

CDF UPGRADE ELECTRONICS	Fermi National Accelerator Lab TRACER Flash Ram Register		
Theresa M. Shaw	SIZE D	FSMC NO	DWG NO TMS-TRAC-071197-P13 REV B
RD/EED/EES	SCALE		SHEET 13 of 17