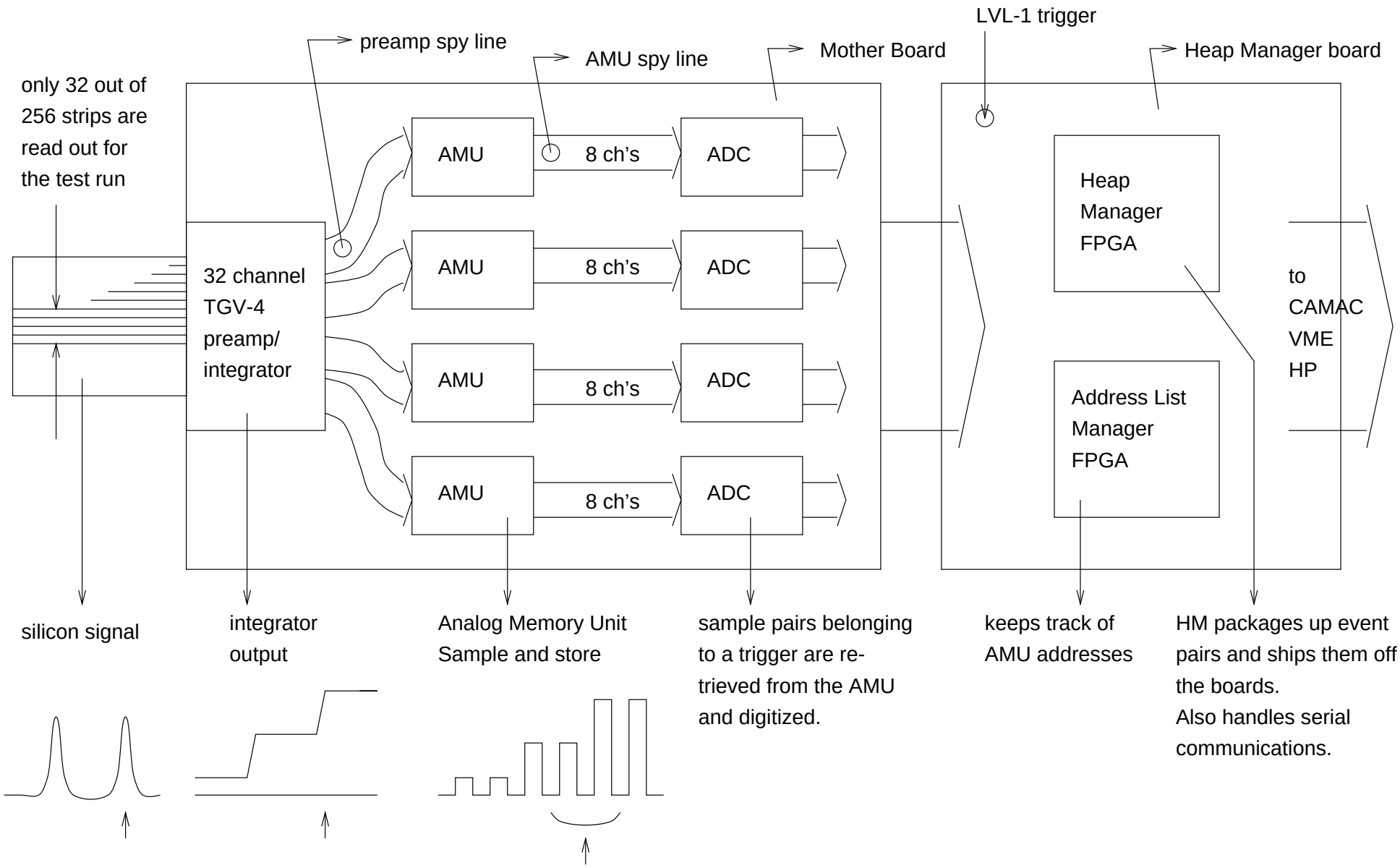
only 32 out of
256 strips are
read out for
the test run
preamp spy line
AMU spy line
Mother Board
LVL-1 trigger
Heap Manager board
32 channel
TGV-4
preamp/
integrator
AMU
8 ch's
ADC
AMU
8 ch's
ADC
AMU
8 ch's
ADC
AMU
8 ch's
ADC
Heap
Manager
FPGA
Address List
Manager
FPGA
to
CAMAC
VME
HP
silicon signal
integrator
output
Analog Memory Unit
Sample and store
sample pairs belonging
to a trigger are re-
trieved from the AMU
and digitized.
keeps track of
AMU addresses
HM packages up event
pairs and ships them off
the boards.
Also handles serial
communications.