THE STLT – AN ULTRA-WIDEBAND HIGH-RATIO PULSE TRANSFORMER

R. Buckles
Bechtel Nevada, PO Box 2710
Livermore, CA, USA

Abstract

The Series Transmission Line Transformer (STLT)[7] heralds from six decades ago[1], recasting transmission line technology with enabling qualities. Functionally similar to broadband Guanella-type transmission line transformers[1-6], the STLT dramatically simplifies the physical complexity and can be scaled to a vast range of size or power. The modular construction allows for a high impedance ratio, with 1000:1 easily realizable. Properly constructed, the STLT performance is limited only by the constraints of the transmission line. We present here the generalized construction of any STLT, performance data of various prototypes, and demonstrate one particular embodiment in a printed circuit package, scaled for driving electro-optical devices. Specifications are: 50-ohm to 3.125-ohm impedance ratio (16:1), 14-kV maximum voltage, 100-ps step response (rise time), and 1-inch square dimension.

I.INTRODUCTION

Much of the history and literature of the transmission line transformer (TLT), has been captured by Sevick[6], and predominantly focuses on radio and RF applications. The Ruthroff transformer[2] forms the core of that work. The basic building block is a balun which functions by summing a direct signal with one delayed through a single cable. The disadvantage of this simplicity is that a signal delayed by one-half a wavelength will nullify the direct signal, and the balun has no transmission. Nevertheless, this works quite well at frequencies below 100 MHz for a properly designed TLT, and much research concerns the optimization of this method. It is not simple, and is beyond our scope here.

A less popular, or perhaps vastly overlooked, alternative, ideal for broadband applications, is the Guanella transformer[1], first introduced in 1944. Figure 1 shows a schematic of a Guanella transformer with 16:1 impedance ratio. This device functions by summing in-phase signals delayed though two or more cables of equal length and impedance. Generally, the use of a ferrite core is to force signals to propagate only through the transmission lines, which are terminated in their characteristic impedance. Performance is limited only by parasitic losses. Historically, these have been regarded as clumsy devices with poor low-frequency performance. Guanella's and Sevick's solution was to wind each cable on individual cores, resulting in very large devices. Matick and Booth show this is not the case, and winding details are important. Booth's TLT, shown in figure 2, is a modified 16:1 Guanella TLT. It places all the cables on a single core, in combination with a series balun which balances the shields about ground. By cleverly reducing parasitic losses, it was the first to achieve 3.5 GHz (100 ps risetime) performance.

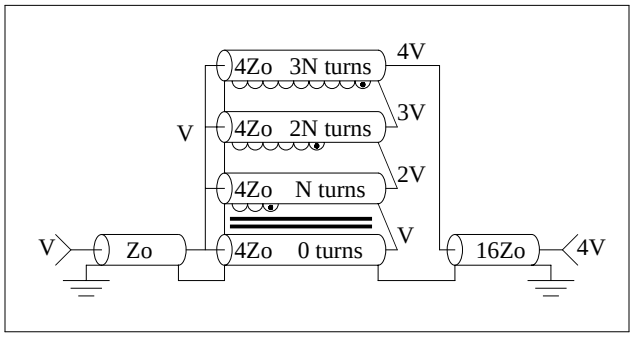

Figure 1. Guanella TLT properly wound on single core.

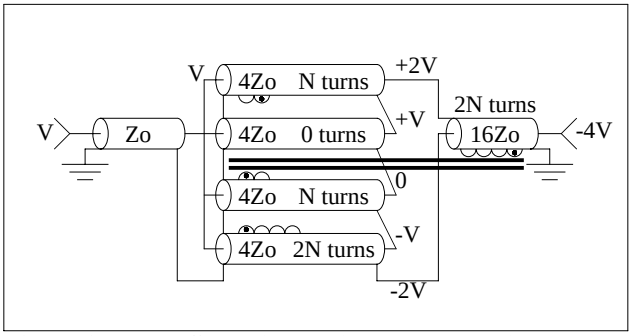

Figure 2. Booth-Guanella TLT incorporates series balun.

An efficient Guanella TLT still suffers several drawbacks which limit its application: All the cables must be the same length, and yet only the longest is fully wound on the core. High-ratio devices would be impractical since all the cables are connected to each other, a physically complicated assembly. The total number of required turns on the core grows quadratically with the voltage step ratio.

The STLT overcomes these limitations by placing TLT sections in series on the same core. The total number of turns required grows only linearly with the voltage ratio, and the cable lengths are only as long as necessary to make the turns. The economy of space reduces size and parasitic losses. Modularity provides simple construction, lending to photolithographic techniques.

DOE/NV/11718-780. This work was supported by the U.S. Department of Energy, National Nuclear Security Administration Nevada Operations Office, under contract no. DE-AC08-96NV11718.

We present in the next sections a simple theoretical treatment and comparison between TLT types. Data showing STLT performance with printed striplines and coaxial cable are presented. We finish with the design of a 16:1 STLT on printed circuit board.

II. THEORY AND ANALYSIS

Traditional theory[3,6] treats a TLT as transmission lines over a ground plane, and analyzes the "secondary" modes which propagate outside the cables. Generally, the characteristic impedance of these modes are absorbed into the overall transmission line, and one is concerned with carefully terminating both modes. The role of a ferrite core is considered only for low frequency performance and is intended to delay these secondary modes as much as possible. For practical high-performance TLT, one can essentially ignore secondary modes, and this cumbersome treatment has little utility. One should be more concerned with impedance matching of the primary signals. Inter-winding capacitance, shunt capacitance, and junction inductance should be minimized. The "ground plane" should be eliminated. The core substitutes for this, and should have as high a resistivity as possible.

A. Pulse Response

A careful look at Faraday's Law is the key to simple, efficient devices. Regardless of winding size and shape, we know the voltage around one loop:

$$V_l = \oint \boldsymbol{E} \cdot d\boldsymbol{l} = \iint \nabla \times \boldsymbol{E} \cdot d\boldsymbol{a} = -\frac{\partial}{\partial t} \iint \boldsymbol{B} \cdot d\boldsymbol{a} \qquad (1)$$

By tightly winding the transmission lines on a high-mu core, each loop is guaranteed to have the same voltage drop, determined by the ramp in enclosed flux. It is prudent to wind the coils with this fact in mind.

We can simply analyze the pulse response, or stacking of the signal at the series connections. Each cable shield of Guanella's TLT has an ever increasing voltage on it, and so requires increasingly more turns. This progression toward higher ratios means the total number of turns is proportional to square of the voltage ratio.

This quantity, "volts per turn" makes a useful metric for comparing TLT to each other as well as conventional transformers. Any transformer which produces the same "volts per turn" is generating the same flux density in the core, and can be considered equivalent. Consider a conventional step-down transformer with 4 primary turns and 1 secondary turn. It has an impedance ratio of 16:1. A 4V input has 1V output, and there is 1V per turn. A 16:1 Guanella TLT with 1V per turn would have the same i/o but would have 1+2+3=6 total turns, but equivalently only 4 primary turns.

The STLT instead stacks sections in series. The pulse response, with the same volts per turn is illustrated in figure 3. The starting point for determining the windings is at the low impedance end. The first pair must have equal and opposite common-mode voltages, but V differentially, which means they must have ±V/2. The rest follows from there via a uniform voltage drop per turn. One volt per turn requires 1/2 + 1/2 +1 +1 = 3 turns total (4.5 including the output balun).

A progression toward higher ratios is listed in table 1, showing the total windings are proportional to the voltage ratio, not the impedance ratio. This dramatic savings in turns and cable length means simple devices can be made with high ratio and better performance.

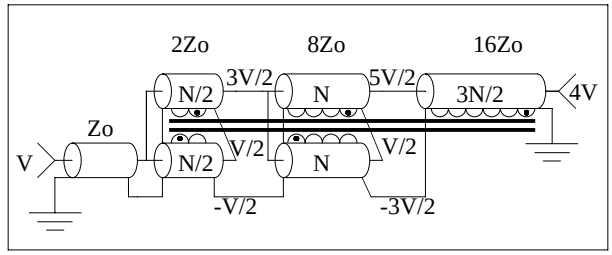

Figure 3. STLT 16:1 with series balun. Note reduction in length, turns, and balanced offset like the Booth TLT.

Table 1. Total Turns Comparison. V/N = design choice.

Impedance Ratio R^2	Guanella	Booth-Guanella	STLT (w/o balun)	STLT (w/balun)
9	3N	3N	2N	3N
16	6N	5N	3N	4.5N
64	28N	19N	7N	10.5N
81	36N	24N	8N	12N
256	120N	71N	15N	22.5N
797	351N	195N	26N	39N
1024	496N	271N	31N	46.5N
R^2	R(R-1)N/2	(R+3)·(R-1)N/4	(R-1)N	3(R-1)N/2

B. Core Magnetics

The net inductance of a TLT incorporating mutual effects of all coils is not difficult to derive. We can accurately treat the windings as an ideal current sheet, and apply Ampere's law. For a single coil with n turns, length l, and area A, we have the field and hence voltage per loop in terms of current. This gives the inductance normalized to a single loop, and the inductance for the whole coil.

$$B = \mu H = \mu n I \qquad n \equiv n / l \qquad (2)$$

$$V_l = \mu \mu_0 n A \frac{\partial I}{\partial t} \equiv L \frac{\partial I}{\partial t} \qquad V = n L \frac{\partial I}{\partial t} \qquad (3)$$

The effect of all coils is to add mutual inductance. One way to quantify is to sum the flux contribution from each coil. Note the importance of currents adding coherently as stated above, and that differential-mode currents do not contribute to the induction.

$$B = \mu \sum_k H_k = \mu n \sum_k I_k \qquad n \to uniform \qquad (4)$$

Alternatively, one may make a geometrical point, that since the flux is common to all coils, each loop has the same mutual inductance. Either produces the same result.

$$V_l = \sum_k M_k \frac{\partial I_k}{\partial t} = L \frac{\partial}{\partial t} \sum_k I_k \qquad (5)$$

These pedestrian results are not unexpected. We carry them out here to make the point, core magnetics of the STLT are treated no differently than any other kind of transformer. Nevertheless, it's important to distinguish the STLT from the Guanella type, since flux-equivalent STLT achieve better results with fewer turns, something not immediately clear from (5). The net evolution of currents I_k can vary among different types of transformers. A detailed analysis is tractable, but beyond the scope of this publication. By simple direct inspection of figures 1 to 3, one important characteristic is obvious: the coils of the STLT are all in series, whereas the coils of the Guanella TLT are in parallel. Therefore the overall shunt inductance of the whole transformer is greater for the STLT, and hence the reason for its naming.

III. EXPERIMENT

Several 16:1 STLT, one 16:1 Guanella TLT, and one 81:1 STLT were assembled for comparison. They all used the same type of core material, Ferroxcube 3E2A (now 3E27), and core shape: two "U" cores, 1"w x .625"h, with .25" square cross-section. Devices #1 and #2 further required "I" core extenders, 1" length. Semi-rigid coax was used for 50, 25, and 17-ohm cables. Low-impedance parallel-plate striplines were printed on 2-mil kapton, Dupont Pyralux LF7041. These incorporate the parallel connection, and two types were made: 2x 6-ohm to 3-ohm, and 3x 2-ohm to 0.6-ohm (for the 81:1 STLT). Three types of performance tests were conducted: TDR for high frequency, RF transmission for low frequency, and high-voltage wide-pulse for saturation. All transformers have 50-ohm input, and their 3-ohm output was terminated with several resistors in parallel with a 50-ohm monitor cable. Table 2 lists the transformers and their results.

Table 2. Measurements

	Device	Eq. Turns	Risetime (ps)	f_{-3dB} (kHz)	Saturation (kV-ns)
1	STLT, 16:1	32	120	4.3	550
2	STLT, 16:1	16	100	6.6	260
3	STLT, 16:1	8	90	54	133
4	Guanella 16:1	16	120	25	277
5	STLT, 16:1 toroid w/o balun	16	100	6.6	74
6	STLT, 81:1	12	100	21	185

A. Time Domain Reflectometry

An HP54120A mainframe and HP54123 sampling head with TDR were used to capture reflectometry data. The excitation is a 200 mV step with 10 ps risetime. Figure 5 shows a record of device #1. Raw signals are shown. Ch.1 (down the center) shows the reflected signal, and Ch.4 shows the transmitted signal. The first two reflections are the junctions of the 25-ohm cable. The last reflection is from the poor termination/monitor of the 3-ohm stripline. These reflections are manifest in the transmitted signal, nevertheless, the risetime is still quite fair. Detail of the rising edge, reveals 120 ps risetime. All devices performed as good or better than this in terms of reflection/matching quality.

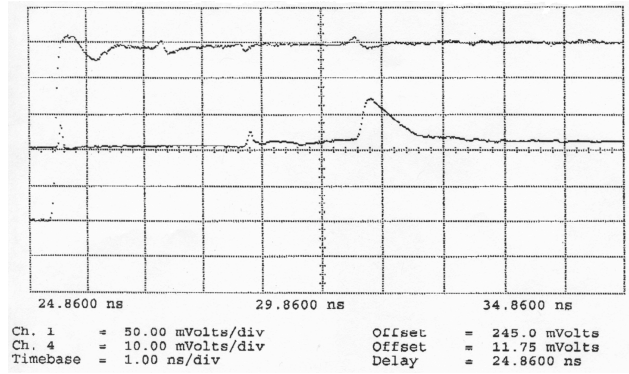

Figure 4. TDR record of STLT, device 1.

B. *RF Transmission*

We applied a nominal 10V p-p sine wave with an HP3314A function generator, at frequencies from 1 kHz to 20 MHz, and recorded on a Tektronix 7104 scope. Amplitude response was flat and the low frequency –3dB point recorded.

C. *Core Saturation*

The volt-second content of each transformer was measured by applying a nominally flat 1kV pulse from a "Quad" pulser of Y690 planar triodes. The output impedance is 20 ohms, and maximum pulse width several microseconds. Saturation was observed by the collapse of the pulse and hence transformer impedance.

Measurements were made on a Tektronix 684A TDS digital scope, and 10% roll-off point was used to indicate volt-second content. Figures 5 shows the results for STLT#1 (32 equivalent turns). Volt-seconds divided by core area and equivalent turns yielded the saturation flux density. All transformers measured within 10% of 4.7 kG, which agrees with the manufacturer's material datasheet.

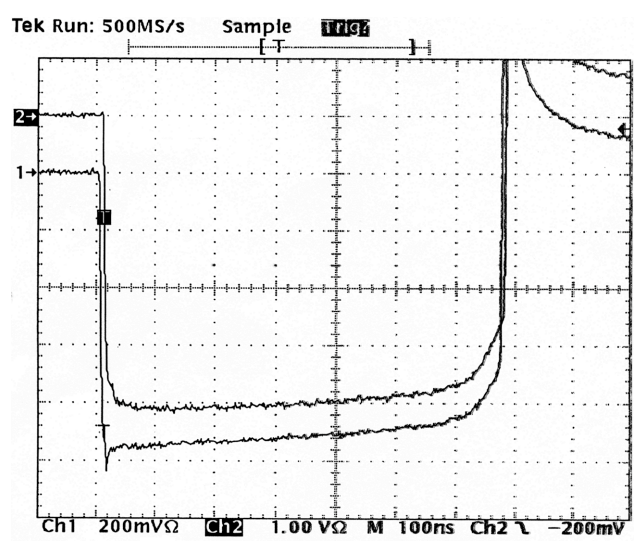

Figure 5. STLT#1 saturation. Ch1: in/1000 Ch2: out/50.

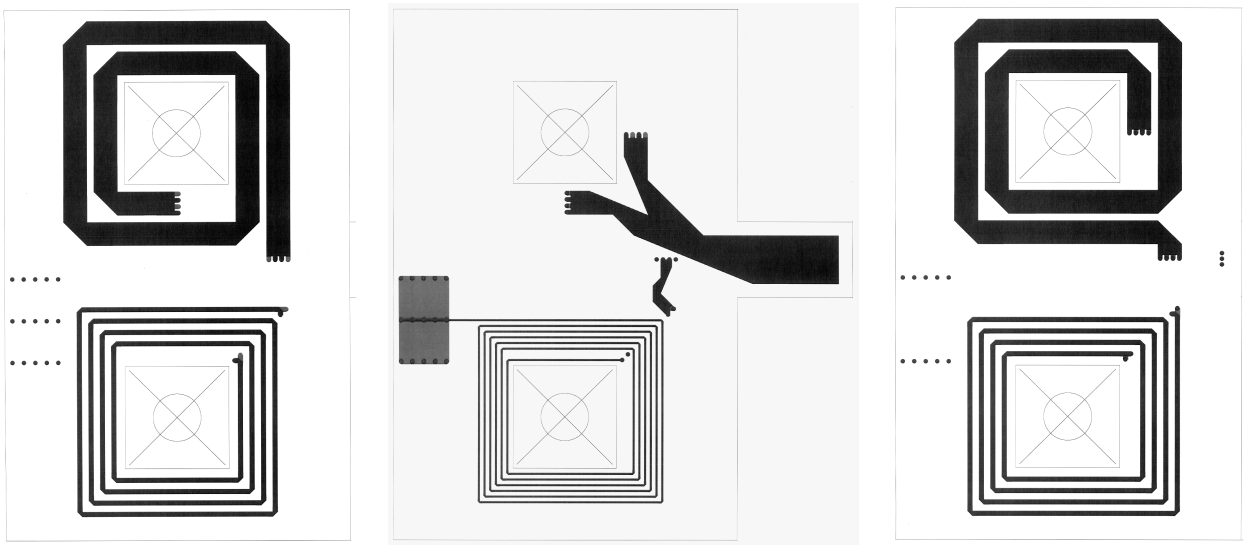

Figure 6. Printed 50-ohm 16:1 STLT with series balun.

IV. PRINTED CIRCUIT DESIGN

The ultimate objective for high frequency design is to minimize inter-junction inductance and shunt capacitance, provide good impedance match, minimize dispersion and dielectric losses. This is an exercise in transmission line design. Figure 6 shows the top, middle, and bottom pairs respectively of a printed STLT. Signal enters/exits the middle layer through 50-ohm SMA connector and 3-ohm stripline pigtail. Vias join transmission lines in series/parallel combination as diagrammed in figure 3. Note mitered bends and exactly equal lengths.

Fabrication was not completed at the time of this publication, but results are expected to surpass those described herein made with crude tools. Details will follow in a future publication.

V. SUMMARY

We have outlined the general design of a Series TLT and comparatively demonstrated their broadband performance. STLT excel in simple construction.

VI. REFERENCES

[1] G. Guanella, “Novel Matching Systems for High Frequencies”, Brown-Boveri Review, vol. 31, pp 327-329, Sep. 1944.

[2] C. Ruthroff, “Some Broad-Band Transformers”, Proc. IRE, vol. 47, pp 1337-1342, Aug 1959.

[3] R. Matick, “Transmission Line Pulse Transformers – Theory and Applications”, Proc. IEEE, vol. 56, (no. 1), pp. 47-62, Jan. 1968.

[4] E. Rotholz, “Transmission Line Tranformers”, IEEE Trans. Microwave Theory and Tech., vol. MTT-29 (no. 4), April 1981.

[5] R. Booth, “High Power Impedance Matchers with 100-ps Risetime”, Univ. of California - LLNL, Report UCID-21632, Dec. 1989.

[6] J. Sevick, Transmission Line Transformers, 3rd ed, Noble, ISBN 1-884932-66-5, Atlanta, 1996.

[7] R. Buckles, R. Booth, and B. Yen, "Series Transmission Line Transformer," U.S. Patent and Trademark Office, serial number 09/814,286, Mar. 2001.

VII. AKNOWLEDGEMENTS

Special thanks go to Rex Booth for fabrication, testing, and many discussions.