INL/EXT-07-13122

Fluidized Bed Asbestos Sampler Design and Testing

Karen E. Wright
Barry H. O'Brien

December 2007

The INL is a U.S. Department of Energy National Laboratory
operated by Battelle Energy Alliance

INL/EXT-07-13122

Fluidized Bed Asbestos Sampler Design and Testing

Karen E. Wright
Barry H. O'Brien

December 2007

Idaho National Laboratory
Idaho Falls, Idaho 83415

Prepared for
Office of Research and Development
National Exposure Research Laboratory
Environmental Sciences Division
U.S. Environmental Protection Agency
Las Vegas NV 89193-3478
Task Order Manager: Dr. Brian Schumacher

and the
U.S. Department of Energy
Under DOE Idaho Operations Office
Contract DE-AC07-05ID14517

Fluidized Bed Asbestos Sampler Design and Testing

INL/EXT-07-13122

Approved by

K. E. Wright, Principal Investigator	Date
B. H. O'Brien,	Date
, Reviewer	Date

ABSTRACT

A large number of samples are required to characterize a site contaminated with asbestos from previous mine or other industrial operations. Current methods, such as EPA Region 10's glovebox method, or the Berman Elutriator method are time consuming and costly primarily because the equipment is difficult to decontaminate between samples. EPA desires a shorter and less costly method for characterizing soil samples for asbestos. The objective of this was to design and test a qualitative asbestos sampler that operates as a fluidized bed. The proposed sampler employs a conical spouted bed to vigorously mix the soil and separate fine particulate including asbestos fibers on filters. The filters are then analyzed using transmission electron microscopy for presence of asbestos.

During initial testing of a glass prototype using ASTM 20/30 sand and clay fines as asbestos surrogates, fine particulate adhered to the sides of the glass vessel and the tubing to the collection filter – presumably due to static charge on the fine particulate. This limited the fines recovery to ~5% of the amount added to the sand surrogate. A second prototype was constructed of stainless steel, which improved fines recovery to about 10%. Fines recovery was increased to 15% by either humidifying the inlet air or introducing a voltage probe in the air space above the sample. Since this was not a substantial improvement, testing using the steel prototype proceeded without using these techniques.

Final testing of the second prototype using asbestos suggests that the fluidized bed is considerably more sensitive than the Berman elutriator method. Using a sand/tremolite mixture with 0.005% tremolite, the Berman elutriator did not segregate any asbestos structures while the fluidized bed segregated an average of 11.7. The fluidized bed was also able to segregate structures in samples containing asbestos at a 0.0001% concentration, while the Berman elutriator method did not detect any fibers at this concentration.

Opportunities for improvement with the fluidized bed include improving reproducibility among replicates, increasing mass recovery, improving the lid gasket seal.

CONTENTS

ABSTRACT iii

ACRONYMS viii

1. Background 1

1.1 Theory of Fluidized Bed Operation 1

1.2 Synopsis of Applications for Fluidized Beds 2

2. System Design 2

3. Experimental Equipment 5

4. Procedures 8

4.1 Cleaning Procedure 8

4.2 Blanks 9

4.2.1 Lot Blanks 9
4.2.2 Lab Blanks 9
4.2.3 Cleaning Blanks 9
4.2.4 Sand Blank 9

4.3 Sample Testing Procedure 10

4.3.1 Sample Preparation 10
4.3.2 Sample Separation in Fluidized Bed 12

4.4 Sample Counting Procedure 12

5. Test Results 13

5.1 Blank Results 13

5.1.1 Lot Blanks 13
5.1.2 Lab Blanks 13
5.1.3 Sand Blank 13
5.1.4 Cleaning Procedure and Cleaning Blanks 13

5.2 Fluidized Bed Sample Test Results 14

5.2.1 TEM Structure Counts 14
5.2.2 Comparison of TEM Data with Sample Concentrations 16
5.2.3 Size Distributions for Asbestos Structures 16

5.3 Berman Elutriator Test Results 18

6. Conclusions 18

7. Additional Work 20

8. REFERENCES 21

Appendix A Design Calculations for the Conical Spouted Bed Elutriator 22

9.3.1 Air Properties 24
Appendix B Assembling the Fluidized Bed 37

Appendix C Use of the Fluidized Bed 41

Appendix D Mathematical Foundation for the Release of Asbestos into a Confined Volume 44

Appendix E TEM DATA for Fluidized Bed 48

Appendix F TEM DATA for Berman Elutriator 49

FIGURES

Figure 1. Solids mixing pattern for a conical spouted bed. 2

Figure 2. Conical spouted bed test unit (dimensions in cm). 4

Figure 3. Calculated particle sizes elutriated versus air flow for the prototype conical spouted bed. 5

Figure 4. Asbestos sampler glass prototype assembly. 6

Figure 5 (a-b). Asbestos sampler stainless steel prototype test assembly. a. schematic of working prototype (this prototype uses three 25 mm collection filters); b. photograph of actual steel prototype. 7

Figure 6. Number of structures versus sample concentration. 16

Figure 7. Number of asbestos structures as a function of aerodynamic size (μm) 17

TABLES

Table 1. Test Matrix (wt% tremolite in an ASTM 20/30 quartz sand matrix). 10

Table 2. Sample matrix. 10

Table 3 Results of blank analyses 14

Table 4. Results of samples segregated by fluidized bed and counted using TEM. 15

Table 5. Results of samples segregated by the Berman Elutriator and counted using TEM 18

Table 6. Comparison of 0.005 wt.% tremolite run in Berman Elutriator versus Fluidized Bed……27

ACRONYMS

alpm	actual liters per minute
ASTM	American Society for Testing Materials
FB	Fluidized Bed
CAS	Chemical Abstract System
cfm	cubic feet per minute
DC	Direct Current
INL	Idaho National Laboratory
NIST	National Institute for Standards and Testing
lpm	liters per minute
ppmwt	Parts per million by weight
ppmv	Parts per million by volume
psia	pounds per square inch absolute
slpm	Standard liters per minute
TEM	Transmission Electron Microscopy
USEPA	United States Environmental Protection Agency
USGS	United States Geological Survey

1. Background

Asbestos is a generic term for two mineral groups that include six naturally occurring, fibrous silicates (Occupational Safety and Health Administration, 1992). Asbestos has been widely used in commercial products because of its useful properties, including resistance to heat and fire. However, it is hazardous if inhaled. Asbestos in soil and soil-like material at multiple locations such as those in and around Libby, Montana endangers public health. In addition, there are numerous locations around the US where asbestos-containing material will need to be evaluated for health risk and cost-effective methods for measuring the potential release of asbestos.

The hazard posed by asbestos-bearing materials depends on the amount of asbestos that can be suspended from the material when it is disturbed. A qualitative procedure was developed (Januch and McDermott, SOP EPA Region 10-IEU-001, 2005) to evaluate the potential for asbestos to become airborne when a soil or other similar asbestos-containing matrix is disturbed. This procedure involves disturbing a quantity of soil or soil-like material in a glovebox, while sampling the air in the glovebox and capturing released particles on a filter. This procedure was effective at indicating the potential for suspension of asbestos from soil at the site, but was relatively time-consuming. A mathematical foundation for release of asbestos into such a box is provided in Appendix D of the current report. Another method was developed by Berman (Modified Elutriator Method for the Determination of Asbestos in Soils and Bulk Material, Revision 1 May 23, 2000). This method involves putting soil or soil-like material into a cylindrical, rotating tumbler while pulling air through the cylinder, upwards through tubes. The method separates the PM10 fraction of the material and pulls it up through the tubes to capture it on filters. Drawbacks of this method include its expense and low sample throughput.

Processing material to suspend asbestos for subsequent characterization is one of several time-consuming steps in current methods. Increased sample throughput and decreased cost per sample could be achieved by developing alternative methods for sample suspension and particle collection for subsequent microscopy analysis. The use of a fluidized bed (FB) for sample suspension could potentially address these issues. Fluidization of the soil samples with air will effectively mix the entire sample, contact it with the air and entrain the fine particulates from the soil where they can be collected on a filter for later analysis.

1.1 Theory of Fluidized Bed Operation

Solids fluidization involves flowing gas or liquid upward through a bed of particulate solids. When the flow is increased to where the pressure drop through the bed equals the weight of the bed, the solids begin to circulate and act like a fluid. The flow rate at which the bed particles become fluidized is the minimum fluidization velocity or minimum spouting velocity. The fluidized bed velocities for fluidized bed design and operation are usually reported in terms of the superficial velocity, which is the velocity of the gas in the empty vessel. The minimum velocity to fluidize solids is dependent on the shape, density, and average size of the particles, and on the velocity of the gas at the bottom of the vessel.

The most common type of fluidized bed consists of a cylindrical vessel with a porous gas distributor plate at the bottom. Cylindrical fluidized-beds are generally limited to a narrow particle size range that can be completely fluidized under moderate velocities. Larger solids in the mixture require higher gas flow rates to keep them from settling at the bottom of the bed, but this increases elutriation of smaller particles from the bed.

Another type of fluidizing vessel is the spouted-bed, in which gas flows up through a small orifice into a conical vessel containing the solids. This type of fluidizing system will fluidize a much wider range of particle sizes than a cylindrical bed because the higher velocity in the lower part of the cone keeps

large particles flowing while the large diameter in the upper part of the cone reduces the gas velocity, thus limiting the size of particles that are elutriated out of the vessel.

One version of the conical fluidized bed is the 'Pachuca Tank' (Perry 1973 pg 19-12), which uses introduction of gas or liquid through a tank consisting of a conical bottom attached to an upper cylindrical section (Figure 1). Pachuca tanks have been used to mix and fluidize large, dense solids such as gravel.

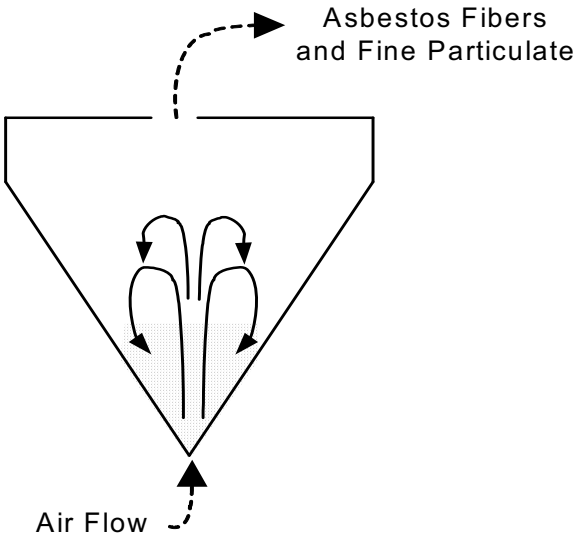

Figure 1. Solids mixing pattern for a conical spouted bed.

1.2 Synopsis of Applications for Fluidized Beds

Desirable features of fluidized beds for solids processing are their high mass transfer, excellent mixing and high heat transfer. Fluidization of particulate solids has many industrial and commercial applications, such as coal combustion, fluid-catalytic cracking of heavy oils into gasoline, liquid radioactive waste solidification, spray drying aqueous solutions, drying of solids such as cement and limestone, purification of silicon by decomposition of silane gas into silicon and hydrogen gas, and separation of fine particulates from solids.

Dust control and containment is a primary concern when processing and handling dusty solids. One common method to contain toxic, dusty, or radioactive materials is to operate the solids processing system under a vacuum. With the process piping and fluidized bed operated under vacuum, any leaks will be inward thus containing the contaminants inside the processing system and preventing contamination of the external surfaces of the equipment and personnel exposure.

2. System Design

Correlations for minimum fluidization and spouting velocities are available in literature, allowing for design of a system based on the expected operating conditions and desired operating characteristics.

Settling velocity correlations are also available, allowing calculation of the size of particles expected to be elutriated out of the bed and onto the sample filter. Detailed design calculations were made for the conical spouted vessel design and are attached as Appendix A.

Several assumptions had to be made for the design calculations. These assumptions do not necessarily represent what was desirable for final performance of the device. They represent parameters that were used in the initial calculations to design the device. It is important to recognize that actual performance of the device may be highly sensitive to some parameters, but relatively insensitive to others. Empirical testing of the device is necessary to achieve the desired performance characteristics. Design assumptions include:

- Average soil particle diameter of 1 mm (about that for no. 20 US standard mesh) and maximum size of 0.25 in, assuming the samples will be sieved through a ¼ in. sieve.
- Bulk properties of the soil (void fraction, sphericity, and particle density) are similar to those for round sand.
- Asbestos particle density is that of amphibole, at 3.0 g/cc
- The asbestos fibers have a diameter of 0.5 to 5 μm and have a length to diameter ratio of 10 to 1.
- Asbestos content in the soil is up to 1 wt% and the fine particulate in the soil is 1 wt% for a total fine particulate content of 2 wt% in the sample.
- Maximum desired filter loading is 0.4 g.
- The fluidizing air is at 20°C and the local pressure at the INL altitude is 645 torr (12.47 psia).
- Inlet hole size of 3 mm.

A conical vessel angle with sides 30° from the vertical (60° included cone angle) was selected for the sampler to give a reasonable bed height for the sample size and a reasonable vessel height, which reduces the velocity in the top of the cone to de-entrain larger particles. The soil sample size and height in the conical vessel, based on the weight percent of fine particulates and maximum filter loading were calculated to be (see Appendix A):

$$m_{sample} = 20g \qquad H_{bed\_30deg} = 3.32cm$$

The minimum spouting air flow for 1 mm average sand and for ¼" average rocks/soil were calculated to be:

$$Q_{ms\_30deg} = 17.68\frac{L}{min} \qquad Q_{ms\_30deg\_max} = 44.56\frac{L}{min}$$

The equivalent spherical diameter for fibers with a length to diameter ratio of 10, based on equivalent volumes, is 2.466 times the fiber diameter. For a maximum fiber diameter of 5 μm and length of 50 μm, the equivalent spherical diameter and settling velocity were calculated to be:

$D_{sph\_asbestosMax} := 2.4662 D_{asbestosMax}$ $D_{sph\_asbestosMax} = 12.08\,\mu m$

$u_{mintopofcone} = 2.19 \frac{cm}{sec}$

Based on the minimum air flow needed for spouting for samples having maximum expected particle size, the dimensions of the conical vessel to achieve the minimum velocity at the top of the cone were calculated to be:

$D_{topofcone\_30deg} = 20.79\,cm$ $H_{cone\_30deg} = 18\,cm$

A smaller cone than this will entrain and elutriate larger particles than the maximum assumed asbestos size. A larger cone than this would result in: 1) decreased velocity at the top; and 2) more surface area on which to deposit particles.

Initially, the first prototype vessel was fabricated of glass. Although the glass allowed visual observation of the spouted bed, the initial tests with sand and fine clay particulate resulted in poor recovery. About 5% of the fines were recovered on the filter. Fine particulate was adhering to the sides of the glass and tubing due to static charge, so a stainless steel funnel of similar in dimensions was procured and an inlet plug with inlet hole was installed in it. The dimensions for the stainless steel test unit are shown in Figure 2. Note that this funnel was obtained commercially thus deviated somewhat from the theoretical geometry indicated by our calculations. Desired air flows were recalculated for the commercially available funnel, and these flows were used for testing of the unit. A mounting stand and removable flat lid with rubber gasket seal were also fabricated for the second prototype.

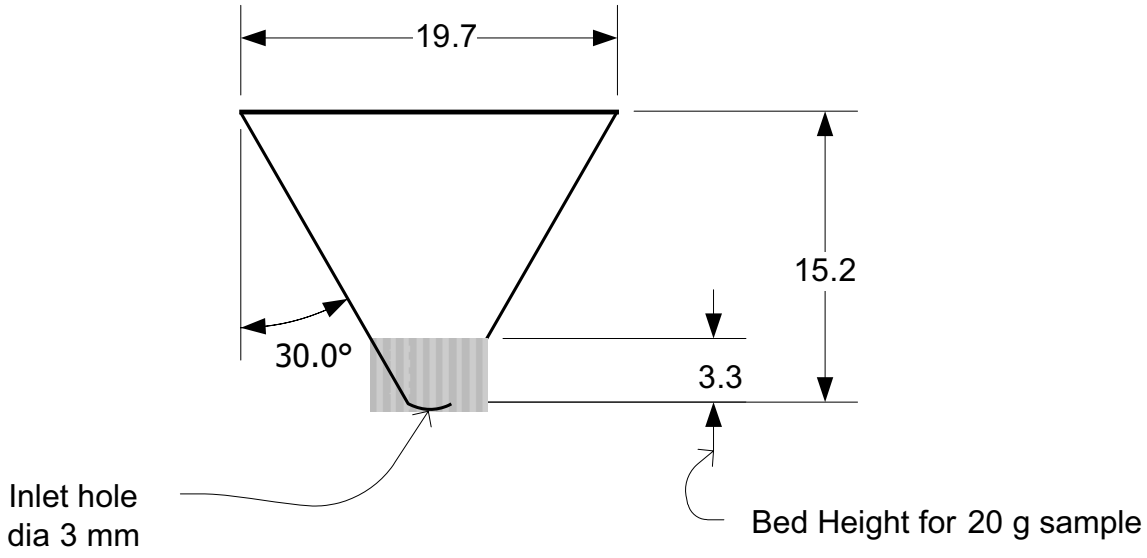

Figure 2. Conical spouted bed test unit (dimensions in cm).

The equivalent spherical particle sizes elutriated out the vessel were calculated for varying flow rates for the conical spouted bed test unit, along with the equivalent asbestos particle diameter for fibers with a length to diameter ratio of 8.6. The results of these calculations are provided in Figure 3.

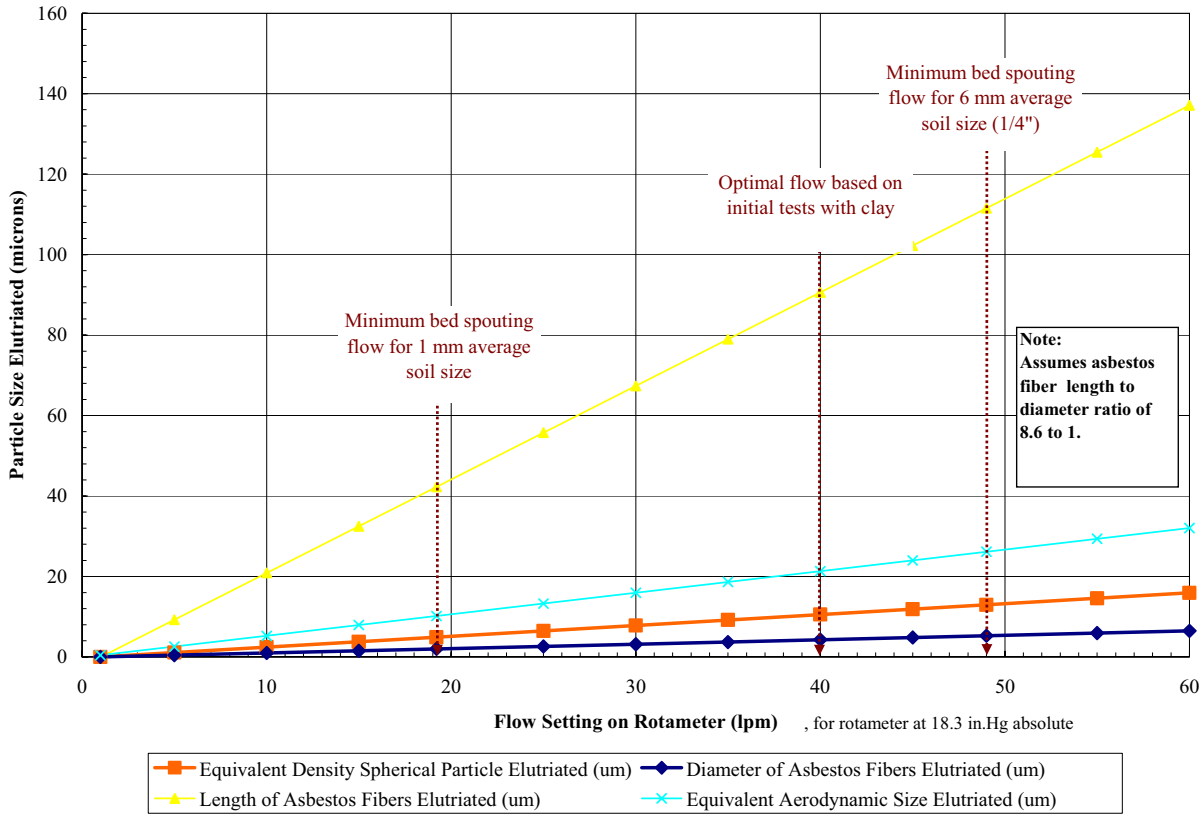

Figure 3. Calculated particle sizes elutriated versus air flow for the prototype conical spouted bed.

Also shown on the figure are the minimum air flows needed to cause the bed to fluidize for a typical soil size (1 mm) and the maximum expected soil size. A flow somewhere between these two flows will be needed for the sample to adequately mix the soil and elutriate fine particulate. For an air flow of 40 slpm, particles with an equivalent spherical diameter of up to 13 µm and asbestos fibers up to about 5 µm diameter will be elutriated from the soil sample and collected on the filter.

3. Experimental Equipment

To test the engineering design, a glass prototype (Figure 4) was constructed at the INL glass shop. The glass funnel was 20.3 cm across the top and tapered to 2 cm at the bottom. The height was 22.9 cm,

with inlet and outlet ports 1cm each in diameter. The glass prototype was advantageous because the degree of fluidization could be readily observed. In application, glass is impractical because it is difficult to clean and breaks easily.

Initial testing suggested that the 1 cm. inlet orifice was too large to allow fluidization to occur even at high flow rates (>60 lpm), thus a 3 mm diameter restrictor was inserted into the orifice, which allowed fluidization at substantially lower flow rates.

Figure 4. Asbestos sampler glass prototype assembly.

Based on the initial experiments with the glass prototype, a second prototype was constructed, this time out of stainless steel (304). A stainless steel funnel was purchased from Cole-Parmer (part number K-07268-00). This was modified by the INL machine shop so that the orifice tapered to a 3 mm. inlet, which was fitted with a threaded fitting for a valve. A square stainless steel lid was constructed for the funnel and was drilled to accommodate one 47mm 0.8 μm pore collection filter. The filter pore size was chosen to provide greater air flow through the cowl than would be permitted by a 0.45 μm pore collection filter.

Subsequent conversations with EPA personnel suggested that although the 47 mm filter provided adequate flow, EPA traditionally used 25mm filter cowls for sampling. Thus, we incorporated the use of a 25mm 0.8 μm pore filter cowl into our design. However, one cowl did not provide adequate flow, thus three were put in manifold across the lid of the funnel (Figure 5, a and b)

a.

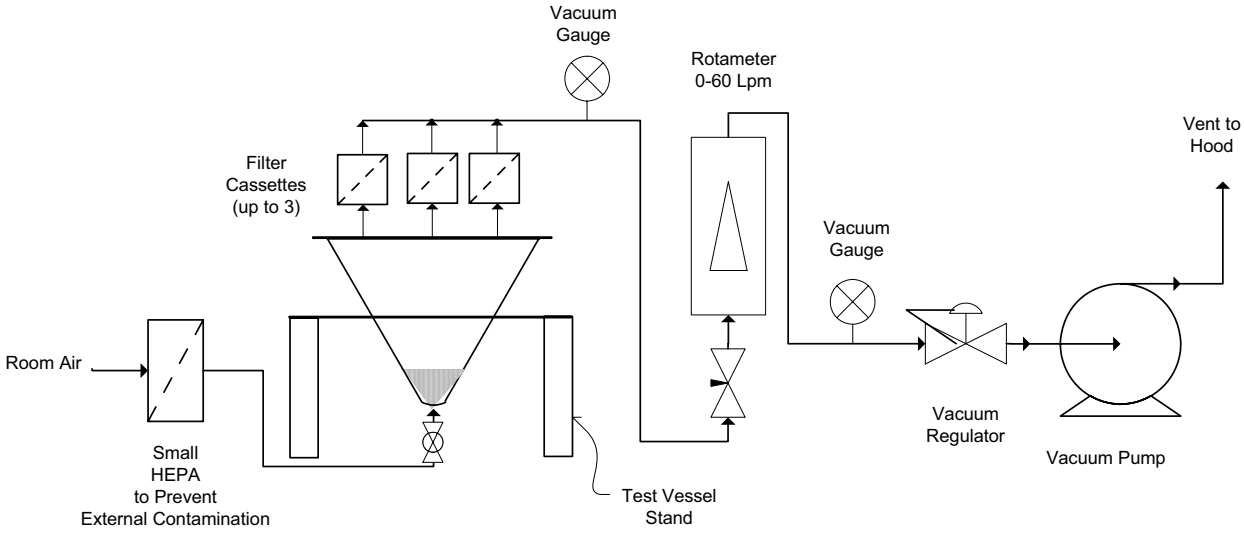

b.

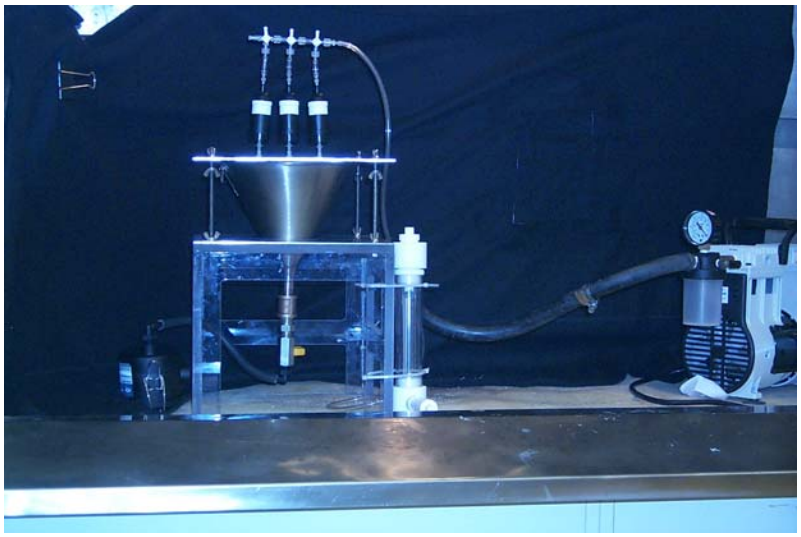

Figure 5 (a-b). Asbestos sampler stainless steel prototype test assembly. a. schematic of working prototype (this prototype uses three 25 mm collection filters); b. photograph of actual steel prototype.

Initial experiments with the steel fluidized bed used calcium silicate (CAS 1344-95-2) as a substitute for asbestos, in a matrix of ASTM 20/30 quartz sand. The goals for initial testing included the following:

1. Determine the optimum flow rate (the highest flow rate that can be used without collecting significant amounts of sand onto the collection filter)

2. Determine the percent recovery of the calcium silicate

3. Qualitative determination of filter loading

Initial flow rate tests showed that at flow rates exceeding 50 lpm, significant quantities of sand were collected on the filters (n=1), but at flow rates less than 30 lpm, very little calcium silicate was collected (n=1). 40 lpm was selected as the flow rate to be used for the testing process. In order to achieve this rate, it was necessary to use three collection filters rather than one.

Calcium silicate recovery experiments were conducted using a 20g sample (19.8g quartz sand and 0.2g calcium silicate). Filters were weighed before and after fluidization to determine the amount of particulate captured. Each of the three filters was weighed to determine whether particle recovery was similar between the three filters. Weighing (and later microscopic analysis of the filters) showed that recovery was similar with each of the filters regardless of their position on the lid ($\pm$ 17% (1 σ) based on three replicates). Recovery for each of the filters was added together to arrive at a total recovery. At a 40 lpm flow rate, approximately 10% of the calcium silicate was recovered. The majority of the sample was retained via static charge along the surfaces of the filter cowls and the interior surface of the fluidized bed.

Several techniques were explored to reduce static charge. These included grounding the fluidized bed, running a DC current through an electrode placed in the fluidized bed, and running influent air through water to humidify it. Grounding the bed had no impact on recovery, but the application of DC current and humidifying the air stream both increased recovery to about 15%. Because this is not a substantial improvement, none of these techniques is currently being used with the fluidized bed.

Filter loading was studied by running a 0.1% sample of USGS tremolite through the fluidized bed and examining the captured material under a phase contrast microscope. Particles were captured on a 0.8μM mixed cellulose ester filter, which was then placed onto a glass slide. Acetone was dripped onto the filter until it was rendered transparent. Using this procedure, it was determined that the minimum filter loading was about 50%, and that the bulk of the captured material was tremolite, not sand. Further testing and development work will be needed to address the filter loading problem.

4. Procedures

4.1 Cleaning Procedure

Two cleaning procedures were tested. The first involved taking apart the fluidized bed, rinsing it in water and ethanol, reassembling the fluidized bed, and running it without a sample 5 minutes. The second involved only wiping down the internal surfaces of the fluidized bed, reassembling the fluidized bed, and running it without a sample for 5 minutes. Samples from each test were collected on clean filters and the filters were sent to a contract laboratory (Lab/Cor, Seattle, WA) for analysis. After the results were received by INL, testing of the bed continued using various concentrations tremolite in sand, and using the cleaning procedure that yielded the fewest extraneous fibers. However, due to the fact that each procedure was tested only once, conclusions cannot be made concerning the absolute performance and variability of each cleaning technique.

4.2 Blanks

4.2.1 Lot Blanks

Two unused filters representative of the lot of filters used to collect air samples for this project were analyzed by ISO 10312. The analysis was performed in such a manner as to achieve equivalent analytical sensitivity (number of grid openings counted) as to be comparable to those of the sample set. The result of analysis of the lot blanks were used to determine whether there is any asbestos contamination of the lot. The sample lot is rejected if the number of asbestos structures or fibers exceed 10 structures/mm^2 or if the mean fiber count for asbestos fibers and bundles longer than 5 μm is more than 0.1 fibers/mm^2.

4.2.2 Lab Blanks

Two lab blanks were prepared and analyzed by ISO 10312. The lab blank cassettes were uncapped exposing the filters during preparation of the sample set. Wedges of the blank filters were prepared along side the wedges of the sample set filters. The purpose was to show that no asbestos contamination occurs in the laboratory during sample preparation. The sample lot is rejected if the number of asbestos structures or fibers exceed 10 structures/mm^2 or if the mean fiber count for asbestos fibers and bundles longer than 5 μm is more than 0.1 fibers/mm^2.

4.2.3 Cleaning Blanks

To ensure that the fluidized bed equipment had been adequately cleaned between samples, a blank was prepared between samples of different asbestos concentrations. This was accomplished by loading a clean collection filter onto the bed and running air through the sample for 5 minutes, the specified collection time for an actual sample. The fluidized bed equipment will be considered contaminated if the asbestos on the cleaning blank filter is > $(\bar{x}_{\min} - \mathbf{2}s_{\min})$ where $\bar{x}_{\min}$ and $s_{\min}$ denote the sample mean and standard deviation of replicates for the number of asbestos particles on the filter for the minimum soil concentration (0.0001 wt% tremolite) for which the concentration is significantly > 0 at the 0.05 probability level as determined by Student's t-test.

4.2.4 Sand Blank

One sand blank using clean, 20 grams of the ASTM 20/30 sand was tested in the fluidized bed. This was accomplished by loading a clean collection filter onto the bed and running air through the sample for 5 minutes, the specified collection time for an actual sample. The purpose was to show that no asbestos contamination was present in the sand used for sample preparation. Sand would be considered contaminated if the number of asbestos structures or fibers exceed 10 structures/mm^2 or if the mean fiber count for asbestos fibers and bundles longer than 5 μm is more than 0.1 fibers/mm^2.

4.3 Sample Testing Procedure

4.3.1 Sample Preparation

Test samples containing 0.0001% to 0.1% tremolite using ASTM 20/30 sand as the matrix (Table 1 and 2) were prepared. The ASTM 20/30 sand had a mean particle diameter of 714 μm and a particle density of 2.4 g/cm^3. The appropriate amount of tremolite was weighed out and added to sand, which had been submerged in deionized water. The sample was shaken and rotated for 5 minutes to allow for complete mixing. It was then put in an oven to dry at 105°C to constant weight. Samples were then split using a riffle splitter to obtain splits of homogeneous 20 g samples used in the testing procedure for the fluidized bed, and splits of 100g for the Berman Elutriator procedure.

Table 1. Test Matrix (wt% tremolite in an ASTM 20/30 quartz sand matrix). All Berman Elutriator samples were diluted 1:1 with uncontaminated soil to increase particulate releasability. Concentrations shown below indicate the ACTUAL asbestos concentration tested by the indicated method.

Technique\Wt%Asbestos	0.05%	0.01%	0.005%	0.001%	0.0005%	0.0001%	0.00005%	Blank
Fluidized Bed	0	7	7	7	0	7	0	8
Berman Elutriator	1	0	1	0	1	0	1	1

The Berman Elutriator procedure was executed by a contracted lab (LabCor, Seattle WA). LabCor used 40g aliquots, which were then mixed with 40g uncontaminated soil. This was done to increase the release of fine particulate as the Berman method relies on collecting a particular mass on the filter to determine the conclusion of the experiment.

Samples with 0.1% tremolite would likely overload the filter, thus they were diluted 1:20 with ASTM 20/30 sand prior to running them through the fluidized bed. The 0.1% tremolite split used for the Berman Elutirator procedure was not diluted, except by the addition of soil as previously described.

Table 2. Sample matrix.

INL Sample Name	LabCor sample number	Description
FB-4-R1	S-12	0.0001% tremolite with ASTM 20/30 sand
FB-4-R2	S-13	0.0001% tremolite with ASTM 20/30 sand
FB-4-R3	S-14	0.0001% tremolite with ASTM 20/30 sand
FB-4-R4	S-15	0.0001% tremolite with ASTM 20/30 sand
FB-4-R5	S-16	0.0001% tremolite with ASTM 20/30 sand
FB-4-R6	S-17	0.0001% tremolite with ASTM 20/30 sand
FB-4-R7	S-18	0.0001% tremolite with ASTM 20/30 sand
FB-3-R1	S-19	0.001% tremolite with ASTM 20/30 sand
FB-3-R2	S-20	0.001% tremolite with ASTM 20/30 sand
FB-3-R3	S-21	0.001% tremolite with ASTM 20/30 sand
FB-3-R4	S-22	0.001% tremolite with ASTM 20/30 sand
FB-3-R5	S-23	0.001% tremolite with ASTM 20/30 sand

FB-3-R6	S-24	0.001% tremolite with ASTM 20/30 sand
FB-3-R7	S-25	0.001% tremolite with ASTM 20/30 sand
FB-2-R1	S-26	0.01% tremolite with ASTM 20/30 sand
FB-2-R2	S-27	0.01% tremolite with ASTM 20/30 sand
FB-2-R3	S-28	0.01% tremolite with ASTM 20/30 sand
FB-2-R4	S-29	0.01% tremolite with ASTM 20/30 sand
FB-2-R5	S-30	0.01% tremolite with ASTM 20/30 sand
FB-2-R6	S-31	0.01% tremolite with ASTM 20/30 sand
FB-2-R7	S-32	0.01% tremolite with ASTM 20/30 sand
FB-1-R1	S-33	0.005% tremolite with ASTM 20/30 sand
FB-1-R2	S-34	0.005% tremolite with ASTM 20/30 sand
FB-1-R3	S-35	0.005% tremolite with ASTM 20/30 sand
FB-1-R4	S-36	0.005% tremolite with ASTM 20/30 sand
FB-1-R5	S-37	0.005% tremolite with ASTM 20/30 sand
FB-1-R6	S-38	0.005% tremolite with ASTM 20/30 sand
FB-1-R7	S-39	0.005% tremolite with ASTM 20/30 sand
BR-0-R1	S-1	Sand blank for Berman elutriator
BR-1-R1	S-2	0.1% tremolite with ASTM 20/30 sand for Berman elutriator diluted to 0.05%
BR-2-R1	S-3	0.01% tremolite with ASTM 20/30 sand for Berman elutriator diluted to 0.005%
BR-3-R1	S-4	0.001% tremolite with ASTM 20/30 sand for Berman elutriator diluted to 0.0005%
BR-4-R1	S-5	0.0001% tremolite with ASTM 20/30 sand for Berman elutriator diluted to 0.00005%
Cleaning blank #1	S-1	Air pulled through empty fluidized bed before running sample FB-4-R1
Cleaning blank #2	S-2	Air pulled through empty fluidized bed before running sample FB-3-R1
Cleaning blank #3	S-3	Air pulled through empty fluidized bed before running sample FB-2-R1
Cleaning blank #4	S-4	Air pulled through empty fluidized bed before running sample FB-1-R1
Lab blank #1	S-5	Unused collection filter cowl for LabCor
Lab blank #2	S-6	Unused collection filter cowl for LabCor
Lot blank #1	S-7	Unused collection filter cowl to test to see if filter is asbestos free
Lot blank #2	S-8	Unused collection filter cowl to test to see if filter is asbestos free

Cleaning protocol 1	S-9	Dismantle Fluid Bed, rinse with water and ethanol, and replace inlet and outlet fittings
Cleaning protocol 2	S-10	Dismantle Fluid Bed, wipe inside, and replace inlet and outlet fittings
Sand blank	S-11	Washed ASTM 20/30 sand

4.3.2 Sample Separation in Fluidized Bed

To minimize cross-contamination, samples were tested in order from lowest to highest concentration. For each sample test, the fluidized bed was cleaned using the first protocol (section 4.1). The inlet valve and outlet fittings and filters were then replaced with new items, the 20 g sample was placed in the fluidized bed, the lid and gasket were clamped to the top, inlet and outlet hoses reconnected, and the vacuum pump turned on. The flow was adjusted to 40 lpm setting on the rotameter (31 slpm, 37 actual lpm in the fluidized bed after correcting the rotameter's reading for vacuum of 7 in. Hg and local pressure of 25.35 in. Hg absolute), and the vacuum pump shut off after 5 minutes. Flow on the rotameter measures the total air flow from all three filter cowls manifolded into one air stream. Individual flow rates through each cowl were not measured.

After testing, the middle filter of the three filters on the fluidized bed outlet was removed and labeled for analysis. The other two filters were not replaced between replicates, but were replaced and the used filters disposed between sample sets.

4.4 Sample Counting Procedure

For asbestos samples segregated by the fluidized bed, one of three collection filters (the one in the center of the cone, Figure 5 (a-b)) was sent to a contract laboratory (Lab/Cor, Seattle, WA) for ISO 10312 TEM analysis. In this case, we used the counting protocol from the ISO procedure, but did not extrapolate to a fiber per volume of air concentration. Since the fluidized bed samples soil, not air, it would be misleading to report data in the form of fibers per volume of air. However, the counting rules used in the ISO 10312 process were used to count the structures impacted on filters by the fluidized bed.

For samples containing 0.0001, 0.001, and 0.01% tremolite, 35 grid openings were counted. For samples containing 0.1% tremolite (which were diluted 1/20 to achieve a 0.005% tremolite concentration), 10 grid openings were counted. Due to the large number of structures found during the counting of the 0.01% samples, samples FB-2-R6 and FB-2-R7 had 10 grid openings counted. Percent recovery was based on the mass of fibers counted on the TEM grids (calculated by multiplying length X width X width X amphibole density of each fiber) , extrapolated to the total area of one 25 mm collection filter, multiplied by three to account for the three collection filters on the top of the funnel.

For asbestos samples segregated by the Berman elutriator, counting methods follow from Berman's protocols (Modified Elutriator Method for the Determination of Asbestos in Soils and Bulk Material, Revision 1 May 23, 2000).

5. Test Results

5.1 Blank Results

The results of the TEM analysis of the filters from cassettes collected for blanks and cleaning protocol testing are provided in Table 3. A small number of asbestos structures were detected on two of the eleven blanks. These were 6.3 Structures/mm^2 counted on the cleaning protocol 2 filter, and 3.2 Structures/mm^2 structure counted on cleaning blank (using protocol 1) #3 taken between testing sample sets of 0.001% and 0.01% tremolite.

5.1.1 Lot Blanks

No asbestos structures were detected by the lab on the filters from unused filter cassettes from the two lots used for the testing. This showed that no asbestos contamination was present in the filter cassettes from the two lots.

5.1.2 Lab Blanks

No asbestos structures were detected by the lab on the lab blank filters. This showed that the filters in the cassettes were not contaminated with asbestos during preparation of the sample set for TEM analysis.

5.1.3 Sand Blank

No asbestos structures were detected by the lab on the filter from testing the sand blank. This showed that no asbestos contamination was present in the sand used for sample preparation.

5.1.4 Cleaning Procedure and Cleaning Blanks

Two fluidized bed equipment cleaning protocols were tested (see Section 4.1). For both, the fluidized bed was loaded with 20/30 ASTM silica sand containing 0.1 wt% tremolite and run for 5 minutes prior to each cleaning. No asbestos structures were detected by the lab on the filter after using Cleaning Protocol 1; however, asbestos structures were detected on the filter generated after using Cleaning Protocol 2. Cleaning protocol 1 was selected for use during the test procedure.

None of the cleaning blanks taken between sample sets showed asbestos structures except for cleaning blank #3 taken between testing of the 0.001% and 0.01% sets. This result suggests that in general, Cleaning Protocol 1 was sufficient.

If we compare the number of primary asbestos fibers recovered from Cleaning Protocol 1 sample and the four cleaning blank samples to the seven replicates run of the 0.0001% tremolite samples, we can make several observations. Firstly, using a two-sample t-test assuming unequal variances, the probability that the means of these two populations are the same is 0.5%. Using a Kolmogorov-Smirnov test, we can show that the results of the 0.0001% analyses follow a normal distribution ($p>0.2$). The probability that 1 (one fiber found in one cleaning blank) is part of the distribution of data encompassed by the 0.0001% sample results is 7.28%. This suggests that it is unlikely that this one fiber compromises the data set.

Table 3 Results of blank analyses

INL Sample Name	Lab/Cor sample number	Primary Asbestos Structures	Filter Density (Structures/mm^2)	Description
Cleaning protocol 1	S-9	0	0	Dismantle, rinse with filtered and de-ionized water and replace fittings.
Cleaning protocol 2	S-10	2	6.3	Dismantle, wipe down inside of fluidized bed and replace fittings.
Lot blank #1	S-7	0	0	Unused collection filter cowl to test to see if filter is asbestos free
Lot blank #2	S-8	0	0	Unused collection filter cowl to test to see if filter is asbestos free
Lab blank #1	S-5	0	0	Unused collection filter cowl for LabCor
Lab blank #2	S-6	0	0	Unused collection filter cowl for LabCor
Sand blank	S-11	0	0	Washed ASTM 20/30 sand
Cleaning blank #1	S-1	0	0	Air pulled through empty fluidized bed before running sample FB-4-R1
Cleaning blank #2	S-2	0	0	Air pulled through empty fluidized bed before running sample FB-3-R1
Cleaning blank #3	S-3	1	3.2	Air pulled through empty fluidized bed before running sample FB-2-R1
Cleaning blank #4	S-4	0	0	Air pulled through empty fluidized bed before running sample FB-1-R1

5.2 Fluidized Bed Sample Test Results

5.2.1 TEM Structure Counts

The total number of TEM structure counts for each replicate sample segregated using the fluidized bed and the corresponding percent of asbestos mass recovered are shown in Table 4. Several observations can be made concerning the data.

1. The percentage by weight of asbestos recovered in each group of replicates varies greatly. This is likely because the weight recovered is dominated by the small number of large structures elutriated and collected on the sample filters. Structures with an aerodynamic diameter greater than 10 μm by number comprised only 12 % of the number of structures but were 94 % of the weight of the structures.

2. In the analyses of the 0.001% samples, there was no recovery of fibers in four of the seven replicates. This was likely due to poor seating of the gasket between the lid and the funnel.

3. There was significant variability in the number of structures counted for the replicates. Possible causes/contributors could have been: 1) uneven flow distribution in the top of the cone near the outlets to the filters, 2) poor lid sealing, 3) uneven loading on the filters leading to uneven numbers of fibers in the grid areas counted by TEM. Deposition of fibers should be heaviest in the center of the filter and should taper off radially toward the edges of the filter. The ideal way to sample and count such a filter would be to sample a "pie-shaped" wedge extracted from the center of the filter, extending to the edges. Fiber counts on the wedge would be integrated over the entire area of the filter. Because TEM grids are circular and of fixed diameter, such a counting method is precluded. The uneven distribution of fibers on the filter can be accentuated by examining a relatively small portion of the filter. This can result in abnormally low or high apparent recoveries.

4. At very low asbestos concentrations (i.e. 0.0001%) a minimum of three fibers were detected, suggesting the method may be highly sensitive to low concentrations.

5. Two of the samples contained some chrysotile fibers (0.0001wt. %, Replicate 1 and 6). The reason for this is not known. However, it is not likely to have come from the sand as the sand blank showed no asbestos detected. In additional, the same sand was used for all 28 samples, so if chrysotile was in the sand, we would expect it to have been detected much more frequently.

Table 4. Results of samples segregated by fluidized bed and counted using TEM.

	Concentration 0.0001 wt%			**Concentration 0.001 wt%**			**Concentration 0.005 wt%**			**Concentration 0.01 wt%**		
Replicate	**Struc-tures**	**Filter Loading (S/ mm^2)**	**Recov-ery (wt%)**	**Struc-tures**	**Filter Loading (S/ mm^2)**	**Recov-ery (wt%)**	**Struc-tures[a]**	**Filter Loading (S/ mm^2)**	**Recov-ery (wt%)**	**Struc-tures**	**Filter Loading (S/ mm^2)**	**Recov-ery (wt%)**
1	13[c]	85.7	18.6	0	0.0	0.0	36	400	8.4	262	832	21.3
2	8	25.4	5.0	65	206.3	183.4	0[b]	0[b]	0.0[b]	190	603	53.4
3	14	44.4	130.4	0[b]	0.0[b]	0.0[b]	34	378	3.9	230	730	6.6
4	5	15.9	5.6	0	0.0	0.0	36	400	15.2	220	698	8.9
5	7	22.2	16.4	29	92.1	13.2	29	322	19.5	173	549	1.7
6	11[c]	38.1	9.2	0	0.0	0.0	27	300	1.5	50	556	2.4
7	4	12.7	1.8	25	79.4	41.5	31	344	17.1	74	822	14.8
Std Dev	3.89	25.1	46.1	24.7	78.5	67.6	12.6	140	7.9	80.2	119	18.0
Total Struct-ures	63			119			193			1199		
Average	8.86	34.9	26.7	17.0	54.0	34.0	27.6	306	9.4	171.3	684	15.6
Total Struc-tures (All Samples)	**1574**											

[a] Ten grids were counted for each 0.005 wt% replicate. Thirty-five grids were counted for all others.

[b] The lid gasket was found to not be properly seated after the sample was run in the fluidized bed. Therefore air in-leakage likely diluted the sample.

[c] A portion of these fibers were chrysotile, not tremolite. Chysotile fibers were not included in the statistics, number of structures, or recovery

5.2.2 Comparison of TEM Data with Sample Concentrations

The mean Total Asbestos structures and PCM Equivalent structures per gram of sample for the each set of replicates are plotted versus the sample asbestos concentration in Figure 6. The R^2 values shown in the figure are for linear correlations of the means. The number of asbestos structures elutriated from the simulated soil sample by the fluidized bed device and collected on the filters was roughly proportional to the concentration in the sample; however, the repeatability was poor for the sample replicates as shown in the figure by the error bars for the 95% confidence limits for each set of replicates.

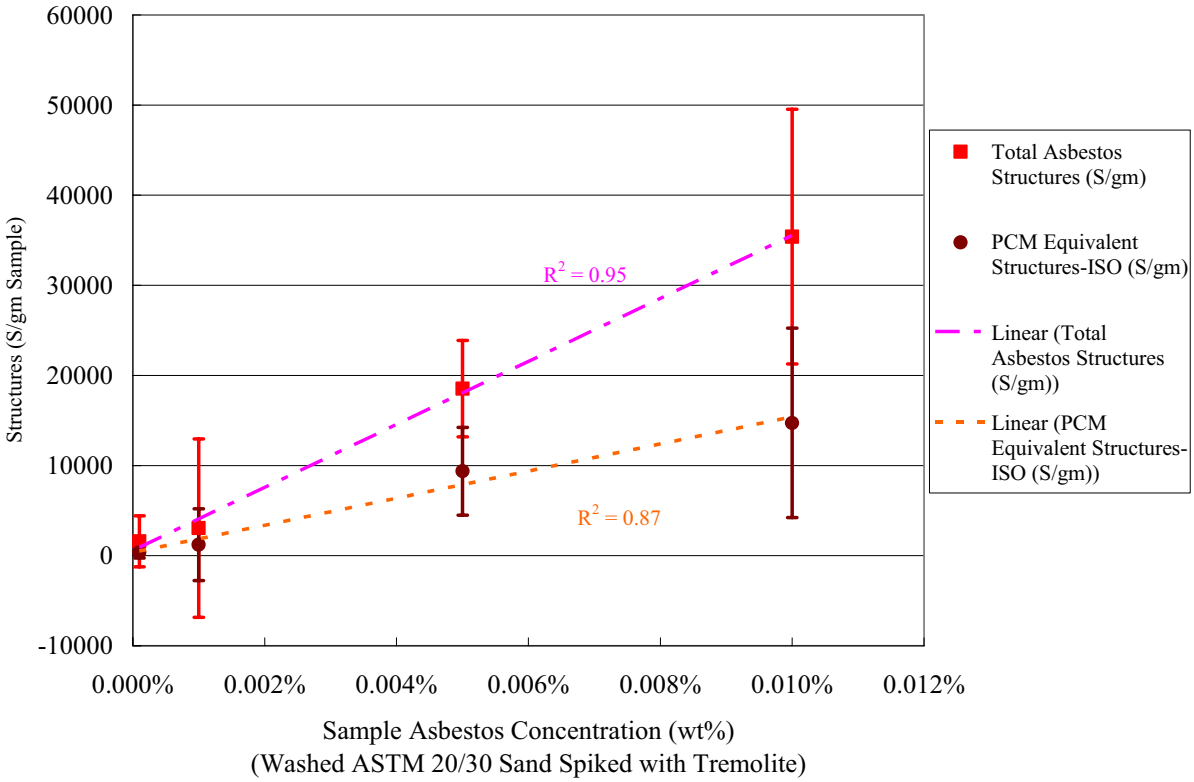

Figure 6. Number of structures versus sample concentration.

5.2.3 Size Distributions for Asbestos Structures

The average aspect ratio for all the asbestos structures counted on the filters was 8.6 with a standard deviation of 6.5. The average aerodynamic diameter (diameter of water droplet having same settling velocity as the fiber/structure) was 5.7 µm with a standard deviation of 6.3 µm. The median aerodynamic diameter was 3.0 µm.

If all the structures collected from all samples are grouped together and plotted as a function of each structure's aerodynamic diameter, several features become apparent (Figure). On the figure, the median size for each sample concentration is denoted by a diamond, and the mean size is denoted by a box.

1. The distribution of aerodynamic diameters present in each concentration is similar, suggesting the size range of particles elutriated from the sample by the fluidized bed is the same regardless of the asbestos concentration. The mean and median aerodynamic diameter for each concentration are also very close, with the means varying from 5.2 to 7.2 microns, and the medians varying from 2.7 to 3.4 microns.

2. Ninety percent of the particles have an aerodynamic diameter less than 10 µm, and ninety-seven percent of the particles are less than 20 µm. Seven structures were identified that have aerodynamic diameters greater than 40 µm, with one of these measuring 90 µm. The longest structure identified had an actual length of 70 µm and a diameter of 1 µm. Calculations suggest that when using the test flow of 31 slpm (37 alpm in the fluidized bed when corrected for ambient pressure), the fluidized bed is capable of elutriating fibers as large as 91 µm with a 4.3 µm diameter (aerodynamic diameter of 21 µm).

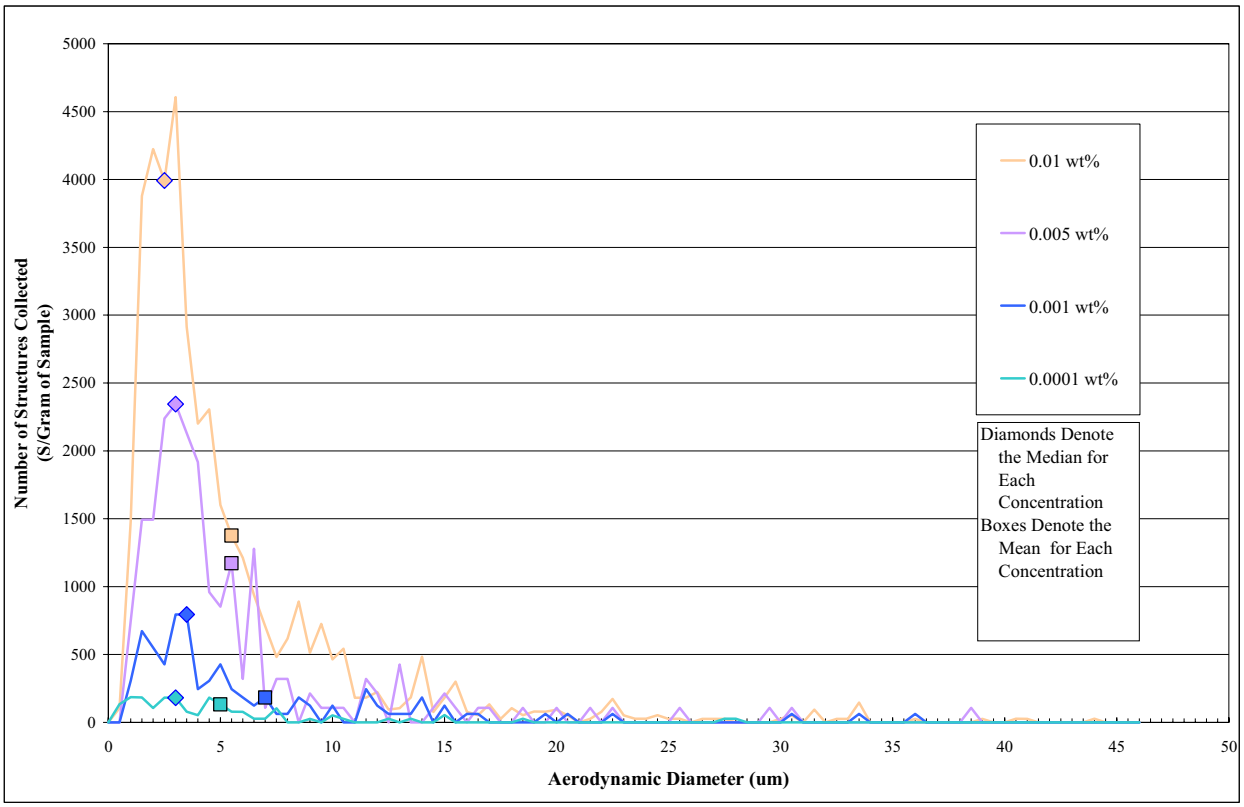

Figure 7. Number of asbestos structures as a function of aerodynamic size (µm)

5.3 Berman Elutriator Test Results

Table 5 shows the results of 40g splits of the four asbestos concentrations tested using the Berman Elutriator method. Although twice as many grids were counted for the Berman method compared to the fluidized bed method, and the samples were two times larger than those used in the fluidized bed, no structures were found in the 0.0001%, 0.001% and 0.01% (which had been diluted to 0.05, 0.005, 0.0005, and 0.00005 wt% for Elutriator testing) asbestos samples using the Berman method. In contrast, using the fluidized bed, structures were found in the 0.0001%, 0.001%, 0.01%, and 0.1% (which had been diluted to 0.005% to prevent overloading the filter).

Making a direct comparison between the two methods was problematic for this study. Budgetary constraints made performing replicates using the Berman Elutriator impossible. In addition, because the elutriator samples had to be diluted with soil to enhance particle release, the weight percentage of tremolite in the elutriator samples was half that of the samples in the fluidized bed. However, 0.005 wt% tremolite was analyzed using both methods. Results for this are shown in Table 6.

Table 5. Results of samples segregated by the Berman Elutriator and counted using TEM

Tremolite wt.%	**Total Asbestos Structures**	**Grids Counted**
0.05	6	74
0.005	0	70
0.0005	0	71
0.00005	0	74

Table 6. Comparison of 0.005 wt.% tremolite run in Berman Elutriator versus Fluidized Bed

	Berman Elutriator	**Fluidized Bed**
Wt. % tremolite in samples	0.005	0.005
Quantity of sample in device (g)	40g	20g
Replicate analyses	1	7
Grid openings counted	74	10
Number of asbestos structures recovered (using Berman criteria for counting)	0	0-21 (average of 11.7)

6. Conclusions

- Advantages of fluidized be separator/sampler and the test method include the following:
    - The time to clean the equipment was minimal since the system was operated under vacuum to preclude contamination from escaping.

- Cleaning Protocol 1 (dismantle fluid bed, rinse with water and ethanol, and replace inlet and outlet fittings) was superior to Cleaning Protocol 2 (dismantle fluid bed, wipe inside, and replace inlet and outlet fittings). The phase II fluid bed separator will use relatively inexpensive disposable fluid bed units and fittings to preclude the need for cleaning.

- The distribution of aerodynamic diameters present in each concentration is similar; suggesting the size range of particles elutriated from sample by the fluidized bed is the same regardless of the asbestos concentration. The mean and median aerodynamic diameter for each concentration are also very close, with the means varying from 5.2 to 7.2 μm, and the medians varying from 2.7 to 3.4 μm.

- The number of asbestos structures elutriated from the simulated soil sample by the fluidized bed separator and collected on the filters was roughly proportional to the concentration in the sample.

- At very low asbestos concentrations (i.e. 0.0001%) fibers are detected, suggesting the method will be highly sensitive to low concentrations.

- Although twice as many grids were counted for the Berman method compared to the fluidized bed method, and the samples were two times larger than those used in the fluidized bed, 0.005wt% asbestos samples using the Berman method. However from 0 to 21 (mean of 11.7) structures were found using the fluidized bed.

Limitations of sampler and test method are as follows:

- The repeatability of the sample method was poor, which was likely because the weight recovered is dominated by the small number of large structures elutriated and collected on the sample filters.

- Some larger fibers were entrained in the outlet. This was either due to the short height of the cylindrical de-entrainment section above fluidized bed or to entrainment of particles thrown upward from the spouted bed.

- The bed flow used for the tests was calculated to elutriate asbestos fibers with an equivalent-density size of 10 μm rather than an aerodynamic size. The bed flow for future tests should be set at that for elutriation of particles with an aerodynamic diameter of 10 μm and smaller, which is the size for respirable particles (PM10) that are the primary toxicological concern. A lower flow will also reduce loading on the filter.

- Tremolite was the only small particulate added to the sand samples. No small particulate was added as would be present in normal soil samples and that would occlude the filter/reduce effectiveness of identification and counting of asbestos structures. The phase II design will incorporate a method(s) to limit collection on the filters (by splitting flow, or increasing the number of filters in parallel on the outlet, depending on the amount of dilution required).

- The lid gasket on the fluidized bed did not seal well, which likely have resulted in poor collection on the filters during some of the tests. The phase II fluid bed separator design does not rely on alignment of a top gasket for sealing the lid but instead uses a non-removal lid that is glued to the cone.

Use of the fluidized bed should be a substantial improvement over EPA's glovebox method for the qualitative determination of asbestos in soil or soil-like materials primarily because the fluidized bed is easier to clean, will increase sample throughput, and is field-deployable. Insufficient data exists at this time to determine whether the fluidized bed will be a substantial improvement over the Berman Elutriator. More extensive testing is required.

7. Additional Work

Before the fluidized bed can be used predictably and defensively as an asbestos screening tool, the following work should be completed:

1. Actual soil samples spiked with asbestos should be run through the fluidized bed to check for filter loading. Sample sizes may have to be adjusted to compensate for filter loading.

2. Asbestos-spiked samples should be thoroughly characterized as to the size population and distribution prior to running them in the fluidized bed, and after the run is complete so that potential damage to the fibers, or segregation within the bed could be observed.

3. The gasket should be glued to the lid so that it cannot unseat itself when the lid is applied.

4. Many replicates of Cleaning Procedure 1 should be run (following contamination of the bed) to determine more accurately how well this procedure performs.

8. REFERENCES

Berman, D.W., and Kolk, A., 2000, Modified Elutriator Method for the Determination of Asbestos in Soils and Bulk Material, Revision 1 May 23, 2000.

H. T. Bi, A. Macchi, J. Chaouki and R. Legros, "Minimum Spouting Velocity of Conical Spouted Beds,"Canadian Journal of Chemical Engineering, Vol. 75, April 1997, pp 460-465.

ISO 10312:1995(E), Ambient air-determination of asbestos fibres-direct-transfer transmission electron microscopy method

Occupational Safety and Health Administration (1992) 29 CFR Parts 1910 and 1926 (Docket No. H-033-d): occupational exposure to asbestos, tremolite, anthophyllite and actinolite. Rederal Register 57(110) (Monday, June 8, 1992), p 24310-24331.

Perry, R. H, and C. H. Chilton, Chemical Engineer's Handbook, 5th ed., New York: McGraw-Hill, 1973.

Wright, K. E., Idaho National Laboratory, “Quality Assurance Project Plan for Evaluation of Field Device for Separation of Asbestos from Soil,” Version 1, March 6, 2007.

US EPA, 2005, Standard Operating Procedure for Sampling Airborne Asbestos Fibers in a Laboratory Enclosure—A Qualitative Procedure, SOP# EPA Region 10-IEU-001.

US Agency for Toxic Substances and Disease Registry (ATSDR), 2003, Superfund Site Assessment Branch, “Public Health Assessment, Libby Asbestos Site, Libby, Lincoln County, Montana, EPA Facility ID: M500090983840,” May 15, 2003.

Appendix A

Design Calculations for the Conical Spouted Bed Elutriator

Design Calculations for the RARE Asbestos Sampler Test Unit

Purpose:
A simplified method is desired to separate and quantify asbestos in soil samples.

Scope:
Calculate design parameters for operation of a conical spouted bed separator for sampling of asbestos in soil.

Safety Category
This design calculation is for a research and development laboratory system with a safety category of CG - Commercial grade.

Natural Hazards Phenomena (NPH) Performance Category (PC)
NPH performance category does not apply to these calculations.

Subject-Specific Data
NA

Assumptions:
Operation is at atmospheric conditions of 20C and local pressure at Idaho Falls of 12.47 psia.
Desired maximum loading on filter is 2 wt% of the total soil sample
Fine particulate and asbestos in the soil are each 1 wt% of the soil sample.

Acceptance Criteria
NA

Software Validation
MathCad version 13.0 was used for the calculations; however, the calculations are simple enough that they can be checked by hand calculations and, as such, software validation is not required.

1 Calculations
1.1 Method:
- Obtain properties of gases and materials at the temperatures and pressures in unit.
- Estimate desired sample volume based on maximum cutoff for asbestos weight % in the sample.
- Calculate minimum spouting velocity for several cone angles and for small and large bed particulate.
- Calculate minimum velocity in freeboard to entrain the asbestos.
- Calculate diameter at the top of the cone required to reduce the velocity to only elutriate respirable sized
- particles.
- Calculate minimum spouting velocities for typical and maximum particle size along with corresponding
- volumetric flow rates.
- Calculate expected pressure drop for the fluidized bed based on initial and final bed weights.
- Compare flow with that desired for the collection filter and adjust sample size until the required flow is
- near the filter design flow.
- Calculate size of outlet tubing to accommodate flow
- Summarize the calculations
- Draw conclusions and make recommendations.

1.2 Define additional units for Mathcad

$lbmole := mole \cdot \frac{lb}{gm}$ $\quad cp := 10^{-2} \cdot poise$

$degC := 1K$ $\quad degF := 1 \cdot R$ $\quad in\_wc := \frac{1}{27.673} \cdot psi$

1.3 Properties of Fluidizing Gas and Solids

1.3.1 Air Properties

Air thermodynamic properties at 20C (Ref. 3 pg 520) and μ is proportional to T:

$T_{air20} \equiv (20 + 273.15)K$ $\quad P_{INL} \equiv 12.47 \cdot psi$ $\quad P_{INL} = 644.9 torr$

$\rho_{air20} := 1.164 \frac{kg}{m^3}$ $\quad \rho_2(T_2, P_2) := \rho_{air20} \cdot \frac{P_2}{1 \cdot atm} \cdot \frac{(20 + 273.15) \cdot K}{T_2}$

$\rho_{air20INL} := \rho_2(T_{air20}, P_{INL})$ $\quad \rho_{air20INL} = 1 \frac{kg}{m^3}$

$\mu_{air20} := 18.24 10^{-6} \cdot \frac{N \cdot s}{m^2}$ $\quad \mu_2(T_2) := \mu_{air20} \cdot \frac{T_2}{(20 + 273.15) \cdot K}$

$\mu_{air20} = 0 cp$

Molecular Weight of Air per the CRC Handbook of Chemistry and Physics 62nd Ed (Ref. 4).:

$MW_{air} := 28.96 \frac{gm}{mole}$

1.3.2 Asbestos properties:

Amphibole asbestos sizes and densities to assume for the design were provided by Karen (Ref. 6):

$D_{asbestos} \equiv 0.5 \cdot micron$ $\quad D_{asbestosMax} \equiv 4.9 \cdot micron$ $\quad FiberLtoD \equiv 8.6$

$L_{asbestosMin} := FiberLtoD \cdot D_{asbestos}$ $\quad L_{asbestosMin} = 4.3 micron$

$L_{asbestosMax} \equiv FiberLtoD \cdot D_{asbestosMax}$ $\quad L_{asbestosMax} = 42.1 micron$

$\rho_{chrysotile} \equiv 2.5 \cdot \frac{gm}{mL}$ $\quad \rho_{amphibole} \equiv 3.0 \cdot \frac{gm}{mL}$

The asbestos particles can be approximated as long cylinders. Kunii and Levenspiel (Ref. 1 pg 62) give the sphericity of cylinders with a height to diameter ratio of 8 as:

$\phi_{asbestos} := \frac{0.58 - 0.70}{10 - 5} \cdot (8 - 5) + 0.7($ $\quad \phi_{asbestos} = 0.63$

1.3.3 Soil Properties:

Estimate soil size and properties assuming it is approximated by round sand. The harmonic mean particle diameter is used rather than the mass mean partilce size for fluidizing and elutriation calculations because it gives a diameter that has the same total surface area for the same bed volume:

$$D_{soilHMPD} = \frac{1}{\sum_{n=1}^{i} \frac{x_i}{D_i}}$$

For the calculations, assume a soil harmonic mean particle diameter of 1 mm (about that for U.S. Standard Sieve no. 20) and that the soil has been sieved through a 1/4 in screen:

$D_{soilHMPD} \equiv 1 \cdot mm$ $D_{soilMax} \equiv 0.25 \cdot in$

Sphericity and void fraction at minimum fluidization from Kunii and Levenspiel (Ref.1) pg 69 for round sand:

$\varepsilon_{soil} := 0.4$

$\phi_{soil} := 0.8$

Estimated soil particle density and corresponding bulk density are:

$\rho_{soil\_p} \equiv 2.6 \cdot \frac{gm}{mL}$

$\rho_{soil\_bulk} := \rho_{soil\_p} \cdot (1 - \varepsilon_{soil})$ $\rho_{soil\_bulk} = 1.6 \frac{gm}{mL}$

1.3.4 Sample Collection Filter Properties

Perry (Ref. 8) notes that the NIOSH 7400 method is the most prevalent method for asbestos sampling from air for analysis by phase control microscopy (PCM). Filter pore size of 0.45 μm is used for air sampling and 0.8 μm for personal monitoring.

For the calculation, we'll assume that a standard 25 mm mixed cellulose ester (MCE) filter with 0.45 μm pore size. Millipore gives the maximum desired flow rate for this filter as

$D_{filter} := 25 \cdot mm$

$Q_{filter\_per\_area} := 4 \frac{L}{min \cdot cm^2}$ $Q_{25mm\_filter} := Q_{filter\_per\_area} \cdot \frac{\pi}{4} \cdot D_{filter}^2$ $Q_{25mm\_filter} = 19.6 \frac{L}{min}$

1.4 Estimate Soil Sample Size Desired and Bed Height in the Cone

Assume a weight fraction of asbestos in soil of:

$X_{asbestos} \equiv 1\%$

Assume a weight fraction of fines in soil equal to or smaller than the asbestos of:

$X_{fines} \equiv 1\%$ $X_{fines} + X_{asbestos} = 2\%$

Assume a desired maximum filter loading;

$m_{filter\_max} \equiv 0.4 \cdot gm$

Soil sample size can then be calculated based on the weight fraction of fines and asbestos and the maximum filter loading:

$$m_{sample} := \frac{m_{filter\_max}}{X_{asbestos} + X_{fines}} \qquad m_{sample} = 20\,gm$$

$$V_{sample} := \frac{m_{sample}}{\rho_{soil\_bulk}} \qquad V_{sample} = 12.8\,mL$$

The height of the soil sample in the conical bed is that of a right circular cone with a volume equal to the sample volume:

$$V_{cone} = \frac{\pi}{3}\cdot r^2\cdot h \qquad r = h\cdot\tan(\gamma)$$

$$V_{cone} = \frac{1}{3}\cdot\pi\cdot h^3\cdot\tan(\gamma)^2$$

Solving for bed height gives:

$$h = \left(3\cdot\frac{V_{cone}}{\pi\cdot\tan(\gamma)^2}\right)^{\frac{1}{3}}$$

For a cone angle of 30 deg from the vertical, the height and top radius of the bed are:

$$\gamma := 30\cdot deg$$

$$H_{bed\_30deg} := \left(3\cdot\frac{V_{sample}}{\pi\cdot\tan(\gamma)^2}\right)^{\frac{1}{3}} \qquad H_{bed\_30deg} = 3.3\,cm \qquad H_{bed\_30deg} = 1.3\,in$$

$$r_{bed\_30deg} := H_{bed\_30deg}\cdot\tan(\gamma) \qquad r_{bed\_30deg} = 1.9\,cm \qquad r_{bed\_30deg}\cdot 2 = 1.5\,in$$

1.5 Particle Elutriation Size and Elutriation Velocity

Particles with a terminal velocity less than the velocity in the freeboard above the spouted bed will be elutriated into the gas exit line while large particles will settle back into the conical vessel or the spouted bed. The terminal velocity can be approximated for particles with sphericity of between 0.5 and 1 by an equation in Kunii and Levenspiel (Ref. 1 pg 80):

$$u_{t\_star} = \left(\frac{18}{d_{p\_star}} + \frac{2.335 - 1.744\,\phi_s}{\sqrt{d_{p\_star}}}\right)^{-1}$$

Where u_{t_star} and d_{p_star} are dimensionless velocity and particle size given by:

$$d_{p\_star} = d_p\cdot\left[\frac{\rho_g\cdot(\rho_s - \rho_g)\cdot g}{\mu^2}\right]^{\frac{1}{3}} \qquad u_{t\_star} = u_t\cdot\left[\frac{\rho_g^2}{\mu\cdot(\rho_s - \rho_g)\cdot g}\right]^{\frac{1}{3}}$$

Substituting these terms and rearranging for u.t gives the following relation as a function of the other parameters:

$$u_t(d_p,\mu,\rho_g,\rho_s,\phi_s) := \left[\left[\frac{\rho_g^{\,2}}{\mu\cdot(\rho_s-\rho_g)\cdot g}\right]^{\frac{1}{3}}\right]^{-1}\cdot\left[\frac{18}{\left[d_p\cdot\left[\frac{\rho_g\cdot(\rho_s-\rho_g)\cdot g}{\mu^2}\right]^{\frac{1}{3}}\right]}+\frac{2.335-1.744\,\phi_s}{\sqrt{\left[d_p\cdot\left[\frac{\rho_g\cdot(\rho_s-\rho_g)\cdot g}{\mu^2}\right]^{\frac{1}{3}}\right]}}\right]^{-1}$$

Find maximum diameter of particles elutriated from sampler based on actual velocity. The equivalent spherical diameter is used for the correlations and is defined as the diameter of a sphere having the same volume as the particle. For the maximum size of asbestos fibers and the fiber length to diameter ratio from the assumptions, the equivalent spherical diameter for the asbestos fibers is:

$$\frac{\pi}{6}\cdot D_{equivSphere}^{\,3} = \left[\frac{\pi}{4}\cdot D_{asbestos}^{\,2}\cdot(FiberLtoD\cdot D_{asbestos})\right] \qquad D_{equivSphere} = \left(\frac{3}{2}\cdot FiberLtoD\right)^{\frac{1}{3}}\cdot D_{Asbestos}$$

$$\left(\left(\frac{3}{2}\cdot 10\right)^{\frac{1}{3}}\right) = \blacksquare \qquad \left(\left(\frac{3}{2}\cdot 8.\right)^{\frac{1}{3}}\right) = 2.2894 \qquad \left(\left(\frac{3}{2}\cdot 8.6\right)^{\frac{1}{3}}\right) = 2.3453$$

Solving for the equivalent spherical diameter gives:

$\left(\frac{D_{equivSphere}}{D_{asbestos}} = 2.4662\right)$ for L/D of 10, and $\left(\frac{D_{equivSphere}}{D_{asbestos}} = 2.29\right)$ for L/D of 8

To ensure that all asbestos particles are elutriated, set the freeboard velocity to that required to elutriate the largest asbestos particles.

$$D_{sph\_asbestosMax} := \left(\frac{3}{2}\cdot FiberLtoD\right)^{\frac{1}{3}}\cdot D_{asbestosMax} \qquad D_{sph\_asbestosMax} = 11.5\text{micron}$$

$$u_{mintopofcone} := u_t(D_{sph\_asbestosMax},\mu_{air20},\rho_{air20},\rho_{amphibole},\phi_{asbestos})$$

$$u_{mintopofcone} = 2.1\ \frac{cm}{sec}$$

1.5.1 Determine Maximum Size Spheres And Asbestos Fibers Elutriated From Sampler For A Given Air Flow Rate

The velocity in the sampler decreases as the diameter increases towards the top of the vessel. Fibers and particles with a settling velocity less than the velocity in the freeboard at the top of the sampler will be elutriated out of the bed while larger particles will settle out of the gas stream and remain in the sampler. Some particles may also be thrown out of the fluidized bed to the top of the vessel and be captured in the outlet, but this will depend on how vigorously the bed is fluidized.

Determine size elutriated vs velocity for a range of equivalent spherical particle sizes, and flowrate for the diameter at the top of the conical vessel:

$D_{elut} := .5 \cdot micron, 2.5 \cdot micron .. 30 \cdot micron$

$D_{testunit} := 19.7 \cdot cm$

$D_{testunit} = 7.8\,in$

Equivalent Sperical Particle Diameter

$D_{elut} =$

0.5	micror
2.5	
4.5	
6.5	
8.5	
10.5	
12.5	
14.5	
16.5	
18.5	
20.5	
22.5	
24.5	
26.5	
28.5	

Elutriation velocity (terminal velocity) for particles having the same equivalent diameter, density, and sphericity of asbestos fibers

$u_t(D_{elut}, \mu_{air20}, \rho_{air20INL}, \rho_{amphibole}, \phi_{asbestos})$

0.1	$\frac{cm}{sec}$
0.5	
0.9	
1.3	
1.6	
2	
2.4	
2.8	
3.1	
3.5	
3.9	
4.3	
4.6	
5	
5.3	

Total flow through top of the conical bed vessel at room temperature and pressure (alpm)

$u_t(D_{elut}, \mu_{air20}, \rho_{air20INL}, \rho_{amphibole}, \phi_{asbestos}) \cdot \pi \cdot \frac{D_{testunit}^2}{4}$

1.8	$\frac{L}{min}$
9	
16.1	
23.1	
30.1	
37	
43.9	
50.7	
57.5	
64.3	
71	
77.7	
84.4	
91.1	
97.7	

Sperical Particle Diameter

$D_{elut} =$

0.5	micror
2.5	
4.5	
6.5	
8.5	
10.5	
12.5	
14.5	
16.5	
18.5	
20.5	
22.5	
24.5	
26.5	
28.5	

Elutriation velocity (terminal velocity) for water droplets of the same diameter

$\left(u_t\left(D_{elut}, \mu_{air20}, \rho_{air20INL}, 1 \cdot \frac{gm}{cm^3}, 1\right)\right)$

0.048	$\frac{cm}{sec}$
0.240	
0.431	
0.622	
0.811	
1.000	
1.189	
1.377	
1.564	
1.752	
1.939	
2.125	
2.311	
2.497	
2.683	

The optimal flow into the sampler based on initial tests with sand, combined with the test sampler conical bed size, gives a velocity at the top of the sampler of:

$Q_{testflow} := 37 \cdot \frac{L}{min}$ alpm $\qquad D_{testunit} = 19.7\,cm$

$H_{testunit} := 15.24\,cm \qquad H_{testunit} = 6\,in$

For the actual height of the test bed unit and typical test flow rate, the velocity at the top of the sampler is

$$u_{testflow} := \frac{Q_{testflow}}{\frac{\pi}{4} \cdot D_{testunit}^{2}} \qquad u_{testflow} = 2\,\frac{cm}{sec}$$

The maximum asbestos size elutriated from the conical sampler vessel can then be iteratively determined to find the size that has the same terminal velocity as the actual velocity at the top of the vessel.

$D_{asbestosMaxElut} := 4.9 micron \qquad L_{asbestosMaxElut} := L_{asbestosMax} \cdot D_{asbestosMaxElut}$

$D_{equiv\_Max\_asb} := (2.29) \cdot D_{asbestosMaxElut} \qquad D_{equiv\_Max\_asb} = 11.2 micron$

$u_{equiv\_Dp\_Max\_asb\_elut} := u_t\left(D_{equiv\_Max\_asb}, \mu_{air20}, \rho_{air20INL}, \rho_{amphibole}, \phi_{asbestos}\right)$

$u_{equiv\_Dp\_Max\_asb\_elut} = 2.2\,\frac{cm}{sec}$

1.6 Calculation of Minimum Spouting Velocity for the Conical Bed

Bi et. al (Ref. 5) reviewed several correlations for minimum spouting velocity and derived a semi-empirical equation from the Ergun equation for the minimum spouting velocity based on the inlet diameter:

$$Re_{i\_ms} = if\left[\frac{D_b}{D_i} < 1.66, 0.202 \cdot \sqrt{Ar \cdot \frac{D_b}{D_i} \cdot \left[\left(\frac{D_b}{D_i}\right)^2 + \frac{D_b}{D_i} + 1\right]} \cdot \frac{1}{3}, \left[0.30 - 0.27 \cdot \left(\frac{D_i}{D_b}\right)^2\right] \cdot \sqrt{Ar \cdot \frac{D_b}{D_i} \cdot \left[\left(\frac{D_b}{D_i}\right)^2 + \frac{D_b}{D_i} + 1\right]} \cdot \frac{1}{3}\right]$$

Inserting the equations for the Reynold's number Re and the Arrhenius number Ar and solving for velocity gives:

$$u_{i\_ms}\left(d_p, \rho_g, \mu, D_b, D_i, \rho_s\right) := \frac{\mu}{d_p \cdot \rho_g} \cdot if\left[\frac{D_b}{D_i} < 1.66, 0.202 \cdot \sqrt{\frac{d_p^{3} \cdot \rho_g \cdot (\rho_s - \rho_g) \cdot g}{\mu^2} \cdot \frac{D_b}{D_i} \cdot \left[\left(\frac{D_b}{D_i}\right)^2 + \frac{D_b}{D_i} + 1\right]} \cdot \frac{1}{3}, \left[0.30 - 0.27 \cdot \left(\frac{D_i}{D_b}\right)^2\right] \cdot \sqrt{\frac{d_p^{3} \cdot \rho_g \cdot (\rho_s - \rho_g) \cdot g}{\mu^2} \cdot \frac{D_b}{D_i} \cdot \left[\left(\frac{D_b}{D_i}\right)^2 + \frac{D_b}{D_i} + 1\right]} \cdot \frac{1}{3}\right]$$

1.6.1 Calculate Flows for Selected Bed Distributor Open Area/Diameter

Selecting and inlet opening diameter of 3 mm, then for a 30 deg bed

$D_i := 3 \cdot mm$ $\gamma = 30\,deg$ $D_i = 0.1\,in$

The ratio of top bed diameter to inlet diameter is:

$r_{bed\_30deg} = 1.9\,cm$ $\frac{2 \cdot r_{bed\_30deg}}{D_i} = 12.8$

The minimum spouting velocity for the average soil size based on the inlet opening diameter is:

$u_{ms\_30deg} := u_{i\_ms}\left(D_{soilHMPD}, \rho_{air20INL}, \mu_{air20}, 2 \cdot r_{bed\_30deg}, D_i, \rho_{soil\_p}\right)$

$u_{ms\_30deg} = 4.2 \times 10^3 \frac{cm}{sec}$

The minimum air flow for the calculated minimum spouting velocity is:

$Q_{ms\_30deg} := u_{ms\_30deg} \cdot D_i^2 \cdot \frac{\pi}{4}$

$Q_{ms\_30deg} = 17.7 \frac{L}{min}$ $Q_{ms\_30deg} = 0.6 \frac{ft^3}{min}$

The superficial velocity at the top of the sample bed (not the top of the vessel) at the minimum spouting flow is:

$u_{bms\_30deg} := u_{ms\_30deg} \cdot \frac{D_i^2}{\left(2 \cdot r_{bed\_30deg}\right)^2}$ $u_{bms\_30deg} = 25.5 \frac{cm}{sec}$

Minimum spouting velocity and air flow for a bed composed entirely of 1/4" rocks with the same density as the soil in a standard cylindrical fluidized bed is:

$u_{ms\_30deg\_max} := u_{i\_ms}\left(D_{soilMax}, \rho_{air20INL}, \mu_{air20}, 2 \cdot r_{bed\_30deg}, D_i, \rho_{soil\_p}\right)$

$u_{ms\_30deg\_max} = 1.1 \times 10^4 \frac{cm}{sec}$ $u_{ms\_30deg\_max} = 105.1 \frac{m}{s}$

Velocity at the top of the bed (not the top of the vessel) and air flow for the minimum spouting velocity for a bed of all 1/4" rocks are then:

$u_{bms\_30deg\_max} := u_{ms\_30deg\_max} \cdot \frac{D_i^2}{\left(2 \cdot r_{bed\_30deg}\right)^2}$ $u_{bms\_30deg\_max} = 64.2 \frac{cm}{sec}$

$$Q_{ms\_30deg\_max} := u_{ms\_30deg\_max} \cdot D_i^2 \cdot \frac{\pi}{4}$$

$$Q_{ms\_30deg\_max} = 44.6 \frac{L}{min} \qquad Q_{ms\_30deg\_max} = 1.6 \frac{ft^3}{min}$$

The superficial velocity is reduced as the diameter of the cone increases with the cone height. The minimum velocity is at the top of the cone. If this velocity is set at the elutriation velocity for the maximum size asbestos fibers, then the height of the cone calculated for the minimum spouting velocity for the maximum size bed particles is then:

$$D_{topofcone\_30deg} := \sqrt{\frac{4 \cdot Q_{ms\_30deg\_max}}{\pi \cdot u_{mintopofcone}}}$$

$$D_{topofcone\_30deg} = 21.3\,cm \qquad D_{topofcone\_30deg} = 8.4\,in$$

Cone height needed when fluidizing 1/4" rocks is then:

$$H_{cone\_30deg} := \frac{D_{topofcone\_30deg}}{2} \cdot \frac{1}{\tan(\gamma)}$$

$$H_{cone\_30deg} = 18.4\,cm \qquad H_{bed\_30deg} = 3.3\,cm \qquad D_{topofcone\_30deg} = 21.3\,cm$$

In reality, the particulates in the soil sample will not all be 1/4", so the flow needed to cause the bed to spout will usually be less than this and the diameter at the top of the cone and corresponding height will not need to be this large.

1.8 Bed and Distributor Design Pressure Drops

For cylindrical beds, fluidization occurs at the point when the pressure drop through the packed bed is equal to the hydraulic pressure in the bottom of the bed. This is because after the bed becomes fluidized, it behaves as a fluid, and as such has a pressure due to the height of the 'liquid' column.

For spouted beds, the bed pressure drop starts out less than that for a fluidized bed and increases as the velocity increases up until the entire bed is fluidized rather than spouting.

The pressure drops for fluidized beds of the same height as the conical beds, and therefore the maximum pressure drop for the conical bed is:

$H_{bed\_30deg} = 3.3\,cm$

$dP_{fb\_30deg} := H_{bed\_30deg} \cdot g \cdot \rho_{soil\_bulk}$ $\qquad \rho_{soil\_bulk} = 1.6 \frac{gm}{cm^3}$ $\qquad g = 980.7 \frac{cm}{sec^2}$

$dP_{fb\_30deg} = 2\,in\_wc$

These are fairly small and thus the absolute pressure in the freeboard above the bed and the corresponding gas density will not be significantly different than that in the inlet air, provided that the pressure drop across the distributor at the inlet to the cone does not also have a significant pressure drop.

Distributor pressure drop.

1.9 Freeboard Height Above the Bed

The spout erupts to a significant height above the surface of the spouting bed. Therefore, either the height of the vessel must be greater than the disengaging height or a baffle plate is needed above the bed to ensure that particles thrown above the bed are not entrained in the outlet. Kunii and Levenspiel (Ref. 1) give the following relationship for the Transport Disengaging Height based on a Froude number of 10e-3.

$$TDH = \frac{u_o^2}{g \cdot 10^{-3}}$$

$$H_{freeboard\_30deg} := \frac{u_{mintopofcone}^2}{g \cdot 10^{-3}}$$

$H_{freeboard\_30deg} = 4.5\ cm$ $\qquad H_{freeboard\_30deg} = 1.8\,in$

The height of the portion of the cone above the bed is much greater than the calculated TDH, so no additional height is needed at the top of the cone for disengagement of bed particles.

1.10 Time to Entrain Particulate

The maximum time needed to elutriate all the fine particulates from the bed can be estimated by assuming that the vessel is perfectly mixed. This is conservative, since flow in the top of the vessel will be something between plug flow and perfectly mixed flow. From Branan (Ref. 8), the purging cycle time to obtain a ratio of initial to final concentration of 1000 to 1 in a perfectly mixed vessel (Ref. 8 pg 272) is:

$R_{i\_to\_f} := 1000$

$V_{fluidbed} := \frac{\pi}{3} \cdot \frac{D_{topofcone\_30deg}^{2}}{4} \cdot H_{cone\_30deg}$

$V_{fluidbed} = 2.2\,L$

$Q_{ms\_30deg} = 17.7 \frac{L}{min}$

Number of bed volumes required for purging is

$N_{volumes} := \frac{\log(R_{i\_to\_f})}{0.4227}$ $N_{volumes} = 7.1$

Maximum purge time at the minimum spouting velocity for 1 mm bed particles is

$T_{purgingMin} := \frac{N_{volumes} \cdot V_{fluidbed}}{Q_{ms\_30deg}}$ $T_{purgingMin} = 52.5\,sec$

Purge time at the optimal velocity based on the initial tests is

$T_{purging} := \frac{N_{volumes} \cdot V_{fluidbed}}{Q_{testflow}}$ $T_{purging} = 25.1\,sec$

Therefore, a purge time of 1 minute will be more than adequate to elutriate the asbestos.

1.11 Tubing Size

Size tubing inside diameter based on typical design velocities for 0-30 psig air (Ref. 8)

$u_{airdesign} := 4000 \frac{ft}{min}$ $u_{airdesign} = 66.7 \frac{ft}{s}$ $u_{airdesign} = 2 \times 10^{3} \frac{cm}{sec}$

$D_{tubing} := \sqrt{\frac{4 \cdot Q_{ms\_30deg\_max}}{u_{airdesign} \cdot \pi}}$ $D_{tubing} = 0.7\,cm$

Velocity for 1/4" ID tubing

$u_{0.25in\_tubing} := \frac{4 Q_{ms\_30deg\_max}}{\pi \cdot (0.25in)^{2}}$ $u_{0.25in\_tubing} = 4.6 \times 10^{3} \frac{ft}{min}$

Velocity for 3/8" ID tubing

$u_{0.375in\_tubing} := \frac{4 Q_{ms\_30deg\_max}}{\pi \cdot (0.375in)^{2}}$ $u_{0.375in\_tubing} = 2.1 \times 10^{3} \frac{ft}{min}$

2. Summary and Recommended Spouted Conical Bed Design

For soil and asbestos properties of

$D_{soilHMPD} = 1\,mm$ $D_{soilMax} = 0.3\,in$ $\rho_{soil\_p} = 2.6\,\frac{gm}{cm^3}$

$D_{asbestos} = 0.5\,micron$ $D_{asbestosMax} = 4.9\,micron$

$\frac{L_{asbestosMin}}{D_{asbestos}} = 8.6$

$\rho_{amphibole} = 3\,\frac{gm}{cm^3}$ $X_{fines} + X_{asbestos} = 2\,\%$

For an estimated maximum desired filter loading, the sample size is calculated to be

$m_{filter\_max} = 0.4\,gm$

$m_{sample} = 20\,gm$ $V_{sample} = 12.8\,mL$ $H_{bed\_30deg} = 3.3\,cm$

Per Millipore literature, the maximum flowrate for their 0.45 μm pore size 25 mm dia MCE filters is

$Q_{25mm\_filter} = 19.6\frac{L}{min}$

Based upon the desire to elutriate the maximum asbestos particle size and smaller, the velocity at the top of the vessel should be greater than:

$u_{mintopofcone} = 2.1\,\frac{cm}{sec}$

The conical spouted bed for fluidizing from 1 mm to 1/4 in. (6.35 mm) particles should have a 30 deg angle from the vertical and have inlet air flow rates of:

$\gamma = 30\,deg$

$Q_{ms\_30deg} = 17.7\frac{L}{min}$ $Q_{ms\_30deg\_max} = 44.6\frac{L}{min}$

$Q_{ms\_30deg} = 0.6\frac{ft^3}{min}$ $Q_{ms\_30deg\_max} = 1.6\frac{ft^3}{min}$

The maximum time to purge and elutriate the fine particulates from the conical sample vessel at the minimum spouting velocity for 1 mm particles is

$T_{purgingMin} = 52.5\,sec$

This flow is about 50% higher than the desired filter flowrate, but should still give reasonably low pressure drop across the filter.

The bed height, cone height, freeboard diameter and freeboard height are:

$H_{bed\_30deg} = 3.3\,cm$

$H_{cone\_30deg} = 18.4\,cm$ $H_{cone\_30deg} = 7.3\,in$

$D_{topofcone\_30deg} = 21.3\,cm$ $D_{topofcone\_30deg} = 8.4\,in$

Maximum bed pressure drop is:

$dP_{fb\_30deg} = 2\,in\_wc$

The conical bed sampler dimensions for the test unit are shown in Figure 1. The sample separator is mostly wasted space due to the large diameter needed to reduce the velocity at the top of the vessel to that needed to allow particles larger than the asbestos fibers to settle out. A cyclone or similar device could be added to the outlet so that the velocity in the freeboard can be increased (diameter decreased) and the overall dimensions reduced.

Alternatively, if it is decided that entrainment of particulate larger than asbestos up to a certain size is acceptable for the filter collection and subsequent analysis, then the bed diameter and height can be decreased without the need for a cyclone.

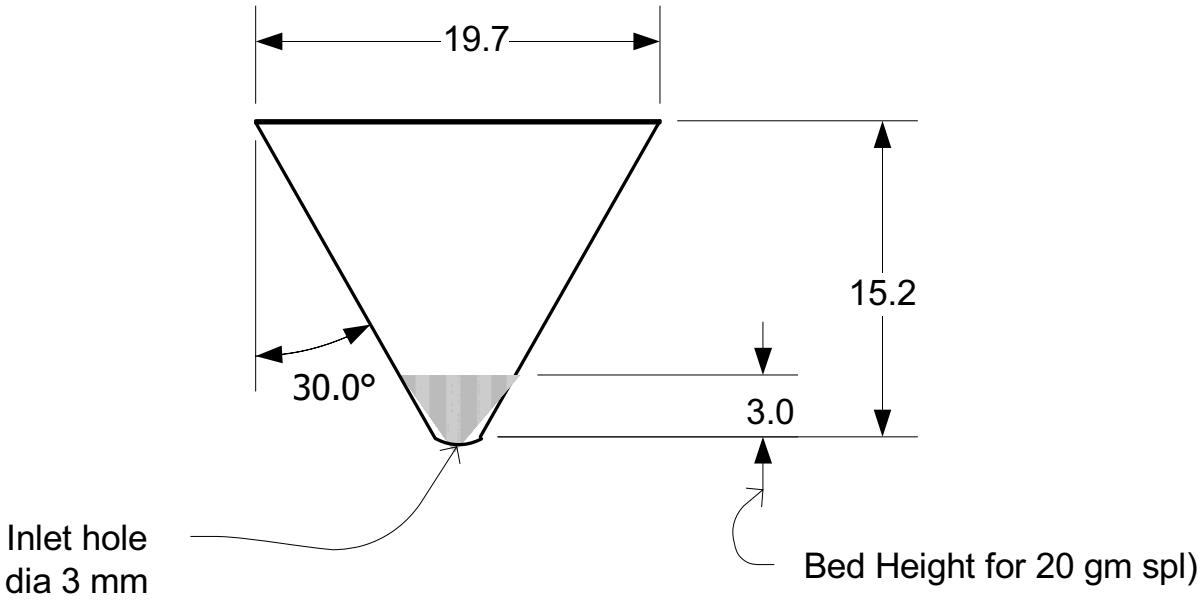

Figure 1: Conical Spouted Bed Test Unit Dimensions
(Dimensions in Centimeters)

3. References:

D. Kunii, and O. Levenspiel, Fluidization Engineering, Second Edition, Butterworth-Heinemann: Newton, MA, 1991.
R. H. Perry,and C. H. Chilton, Chemical Engineer's Handbook, 5th ed., New York: McGraw-Hill, 1987.
F. Krieth and W. Z. Black, Basic Heat Transfer, New York: Harper and Row, 1980.
CRC Handbook of Chemistry and Physics, 62nd ed., Chemical Rubber Co., 1981.
H. T. Bi, A. Macchi, J. Chaouki and R. Legros, "Minimum Spouting Velocity of Conical Spouted Beds,"Canadian Journal of Chemical Engineering, Vol. 75, April 1997, pp 460-465.
K. E. Wright, INL, E-mail to B. H. O'Brien, "Sizes to segregate," January 16, 2006.
A. Perry, "A Discussion of Asbestos Dection Techniques for Air and Soil," prepared for the U.S. EPA Office of Solid Waste and Emergency Reponse, August 2004.
C. Branan, Rules of Thumb for Chemical Engineers, Second Edition, Houston: Gulf Publishing, 1998.

Appendix B

Assembling the Fluidized Bed

Materials Required

- Fluidized bed apparatus (steel funnel with 3mm orifice and ½" NPT male thread on inlet)
- Steel lid, drilled to accommodate luer fittings (fittings listed by size and part number below)
- Lexan support stand with 4 wing nuts
- Inlet HEPA filter (such as part number 5169K72 and 9179K14 from McMaster Carr)
- Neoprene rubber gasket (such as part number 97725K42 from McMaster Carr)
- Rotameter (0-60 lpm)
- Filter Cassettes (such as part number 225-231 from SKC)
- Ball valve (1/2" NPT female, ½" NPT female)
- Vacuum tubing, ½" ID x ¼" wall
- Tygon tubing, 1/8" ID
- Tubing, 1/4" ID
- Vacuum pump (such as Welch dry vacuum #2581)
- Luer Fittings (Part numbers listed for fittings correspond to Cole-Parmer)
    - 1- Male luer plug (K-45505-58)
    - 3- Male luer x male luer (K-45505-72)
    - 3- Stopcocks (K-30600-02)
    - 3- Female luer x ¼ - 28 UNF (K-45502-66)
    - 1- Female luer x 1/8" hose barb (K-45502-04)
    - 3- Male luer lock x 1/8" hose barb (K-45505-04)
    - 3- Male luer slip x 1/8" hose barb (K-45505-26)
- 1 Multi barb elbow x male 1/8" ID x ½" NPT
- 1 Multi barb straight x male 1/8" ID x ½" NPT
- Teflon tape (<1/4" wide)
- Zip ties (~6-8" long)

PRELIMINARY ASSEMBLY

HEPA FILTER ASSEMBLY

1. Replace the nylon filter that comes in the inlet filter cartridge with the HEPA filter.
2. Put a multibarb elbow (1/8" x ½" NPT) on the filter cartridge outlet to fluidized bed.
3. Attach about 12-15" ¼"ID tubing to multibarb elbow, and connect it to the inlet of the fluidized bed.

FUNNEL SET-UP

1. Attach the ball valve to the NPT inlet of the funnel.
2. Attach a straight barb elbow (1/8" x ½" NPT) to the inlet to the ball valve.
3. Put the funnel in the hole in the steel base of the lexan stand.
4. Attach the tubing on the outlet of the HEPA filter to the inlet barb of the funnel.
5. Using zip ties, attach the rotameter to one leg of the lexan stand.

GASKET ALTERATION

1. Trim the gasket such that the outer diameter remains the same, but the width of the gasket is about ½" (thus the inner diameter will be about 1" larger).

MANIFOLD ASSEMBLY

1. Attach the three stopcocks together:
    a. orient one stopcock so that it looks like a "T".
    b. connect all three stopcocks in series by attaching the male luer lock of the right side of the "T" to the female receiver side on the left side of the "T" of another stopcock.
    c. repeat with all three stopcocks so that the tops of the "T's" are all attached and the base of the "T's" all point down.

2. Hold the stopcocks so that the base of the “T’s” point down and the valves face you. Put the male plug into the left side of the “T” in the stopcock on the far left. Put the female luer-hose barb into the luer lock of the right side of the “T” in the stopcock on the far right.

3. Attach one male luer lock x 1/8” barb to each of the intake ports on the 3 stopcocks.

4. Cut three 1-inch sections of 1/8” ID tygon tubing and attach each section to the barb end of the male luer lock x 1/8” barb on the stopcocks.

5. Into each free end of tubing, insert the barbed end of a male luer slip x 1/8” barb. This assembly constitutes the manifold.

LID ASSEMBLY

1. Obtain the three female luer x ¼” - 28 UNF fittings. Wrap each with Teflon tape and screw into the three holes in the lid.

2. Put a male luer x male luer into each of the female luer x ¼” - 28 UNF fittings.

FINAL ASSEMBLY

1. Put the gasket on the lip of the funnel so that it covers the whole lip.

2. Put the lid on the funnel such that the fittings extend upward and right-to-left (rather than front-to- back). Make sure the gasket is not moved out of place.

3. Put one wing nut on each all-thread and tighten each iteratively until nut is finger tight.

4. Put one cassette on each male luer extending out of the lid such that the inlet of the cassette faces the lid and the outlet of the cowl extends upward.

5. Attach the manifold so the male leur fitting of each inlet goes into the outlet of each cassette.

6. Affix one end of tygon tubing to the outlet of the manifold and the other end to the inlet of the rotameter.

7. Attach one end of the vacuum tubing to the outlet of the rotameter and the other end to the inlet of the vacuum pump.

Appendix C

Use of the Fluidized Bed

USE OF THE FLUIDIZED BED FOR SEPARATION OF ASBESTOS FROM NON-ASBESTOS MATRIX AND QUALITATIVE ANALYSIS

1. Assemble the fluidized bed as described in Appendix B.

2. Turn on the vacuum pump and open the ball valve on the bottom of the funnel.

3. Adjust the rotameter so that flow is 40 lpm. If the vacuum pump has adjustment, this may require opening or closing down the adjustment valve to provide the required 40 lpm. Note: The specific amount of vacuum provided is not particularly important as long as adequate flow is maintained.

4. Turn off the vacuum and close the ball valve on the bottom of the funnel.

5. Using a riffle splitter, split the sample to 20g ± 2g. Record the weight of the sample used.

6. Remove the 4 wing nuts holding the lid down, remove the lid, and put the sample in the funnel.

7. Being careful not to dislodge the gasket, replace the lid and the 4 wing nuts.

8. Turn on the vacuum and open the ball valve on the bottom of the funnel. Start a stopwatch.

9. At the end of 5 minutes, close the ball valve and turn off the funnel. Note: Complete fluidization should occur within the first 30 seconds, so running the fluidized bed 10-15 seconds more or less than 5 minutes should pose no problem.

10. Remove one of the filter cowls to the right or left of the center cowl. Using established methods (e.g. NIOSH 7400), prepare the filter for viewing under phase contrast microscopy.

11. Examine the filter using phase contrast microscopy to determine whether it is <50% loaded. If it is <50% loaded, take the CENTER filter cowl off the fluidized bed and perform ISO 10312 analysis on it. Proceed to step 13.

12. If in step 11, the filter > 50% loaded, use the riffle splitter to obtain a smaller sample weight (note the weight). Proceed to step 13.

13. Clean the fluidized bed

Cleaning the Fluidized Bed

1. Remove the collection cowls and the fittings that connect the cowls to the lid. Dispose of the outer two cowls and save the middle cowl for analysis.

2. Remove the ball valve and dispose of it.

3. Dispose of excess sample in the funnel.

4. Wipe the interior of the funnel, the lid, and both sides of the gasket with a damp paper towel.

5. Run deionized water through the funnel for about a minute. Make sure to run water in both directions through the orifice at the bottom.

6. Run deionized water across both sides of the lid and both sides of the gasket.

7. Rinse all equipment with ethanol (this allows it to dry quicker).

8. Reassemble when dry using a new ball valve and fittings between the lid and cowls.

Appendix D

Mathematical Foundation for the Release of Asbestos into a Confined Volume

Release of Asbestos into a Confined Volume of Air

Carl D. Palmer and Karen Wright
Idaho National Laboratory

Consider a confined volume with dimensions $\Delta x_c \times \Delta y_c \times \Delta z_c$ containing a volume of soil with dimensions $\Delta x_{soil} \times \Delta y_{soil} \times \Delta z_{soil}$ (Figure 6**).** The areas of the confined volume and the soil normal to the z-direction are $A_c = (\Delta x_c)(\Delta y_c)$ and $A_{soil} = (\Delta x_{soil})(\Delta y_{soil})$, respectively. The mass of soil within the box, M_{soil}, is

$$M_{soil} = \rho_{b,soil} A_{soil} \Delta z_{soil} \quad (1)$$

If the concentration of asbestos in the soil, $C_{asb,soil}$, is given in fibers per gram of soil, the number of releasable fibers, N_{fiber}, can be written as

$$N_{fiber} = C_{asb,soil} M_{soil} = C_{asb,soil} \rho_{b,soil} A_{soil} \Delta z_{soil} \quad (2)$$

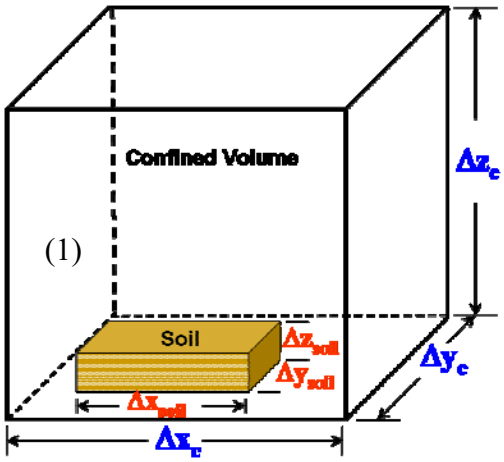

Figure 6. Volume of soil in a confined volume.

The concentration of asbestos fibers in air, $C_{asb,air}$, can be estimated by

$$C_{asb,air} = \frac{N_{fibers} E_r}{V_{air}} = \frac{N_{fibers} E_r}{A_c \Delta z_c - A_{soil} \Delta z_{soil} (\mathbf{1} - \theta_s)} \quad (3)$$

where E_r is the efficiency of particle release (i.e., the fraction of the total number of fibers in the soil released to the air) and θ_s is the saturated water content (porosity) of the soil. Substituting Eq. (2) into Eq. (3) we obtain

$$C_{asb,air} = \frac{E_r C_{abs,soil} \rho_{b,soil} A_{soil} \Delta z_{soil}}{A_c \Delta z_c - A_{soil} \Delta z_{soil} (\mathbf{1} - \theta_s)} \quad (4)$$

or after rearranging Eq. (4)

$$C_{asb,air} = \frac{E_r C_{abs,soil} \rho_{b,soil}}{\left(\frac{A_c}{A_{soil}}\right)\left(\frac{\Delta z_c}{\Delta z_{soil}}\right) - (\mathbf{1} - \theta_s)} \quad (5)$$

The $\rho_{b,soil}$ and θ_s are material properties of the soil that can either be measured or reasonably estimated. The dimensionless ratios $\left(A_c / A_{soil}\right)$, $\left(\Delta z_c / \Delta z_{soil}\right)$ and E_r are activity-based parameters that need to be developed from careful, detailed field measurements.

In this derivation, we have assumed that the airflow is sufficiently large relative to the confined air volume that essentially all of the particles have been removed and collected on the filter over the time period of interest. In an alternative approach, the air flow rate may be relatively small and not all of the particles are removed over the sampling interval. Assume there is complete mixing in the confined volume as air is added. Further, assume that there is no loss of particles except by the airflow out of the

confined volume (i.e., particles are not adhering to the sides of the container or settling in the chamber). The change in the number of particles per unit time is

$$\frac{dN_{asb,air}}{dt} = -\left(\frac{Q}{V_c}\right) N_{asb,air} \tag{6}$$

where $N_{asb,air}$ are the number of asbestos fibers in the air in the confined space, Q is the air flow in liters per unit time and V_c is the volume of air in the confined space which is

$$V_c = A_c \Delta z_c - A_{soil} \Delta z_{soil} (\mathbf{1} - \theta_s) \tag{7}$$

At t = 0, the number of fibers in the air is $N_{0,air}$. Equation (6) can be rearranged and integrated to yield

$$\int_{N_{\mathbf{0},air}}^{N_{abs,air}} \frac{dN_{abs,air}}{N_{abs,air}} = -\int_{\mathbf{0}}^{t} \frac{Q}{V_c} dt \tag{8}$$

If Q is constant over the sampling interval, the number of fibers in the air within the confined space at time t is

$$N_{abs,air}(t) = -N_{\mathbf{0},air} e^{-(Q/V_c)t} = -E_r N_{fibers} e^{-(Q/V_c)t} \tag{9}$$

If all of the fibers that leave the confined volume are captured by the filter, the number of fibers on the filter at time t, $N_{filter}(t)$ is

$$N_{filter}(t) = N_{\mathbf{0},air} - N_{\mathbf{0},air} e^{-(Q/V_c)t} = N_{\mathbf{0},air} \left(\mathbf{1} - e^{-(Q/V_c)t}\right) = E_r N_{fibers} \left(\mathbf{1} - e^{-(Q/V_c)t}\right) \tag{10}$$

Eq. (10) can be solved for $N_{0,air}$:

$$N_{\mathbf{0},air} = \frac{N_{filter}}{\left(\mathbf{1} - e^{-(Q/V_c)t}\right)} \tag{11}$$

Dividing both sides of Eq. (11) by V_c, we obtain the concentration of fibers at time t = 0:

$$\frac{N_{\mathbf{0},air}}{V_c} = C_{\mathbf{0},air} = \frac{N_{filter}}{V_c \left(\mathbf{1} - e^{-(Q/V_c)t}\right)} \tag{12}$$

Substituting Eqs. (1) and (7) into Eq. (12) and taking the limit as $t \to \infty$, one obtains Eq. (5). Similarly, by dividing Eq. (11) through by the mass of soil, M_{soil}, we can obtain the concentration of releasable fibers in the soil ($C_{abs,r,soil}$) or the total number of fibers in the soil ($C_{abs,soil}$):

$$\frac{N_{\mathbf{0},air}}{M_{soil}} = C_{abs,r,soil} = E_r C_{abs,soil} = \frac{N_{filter}}{M_{soil} \left(\mathbf{1} - e^{-(Q/V_c)t}\right)} \tag{13}$$

Substituting Eq. (1) into Eq. (13) and taking the limit as $t \to \infty$, one obtains an expression for $C_{asb,soil}$ that can also be obtained from Eq.(2). Based on these equations, the expectation is that the asbestos concentrations in the air within the confined volume should decrease exponentially with time (Figure 7).

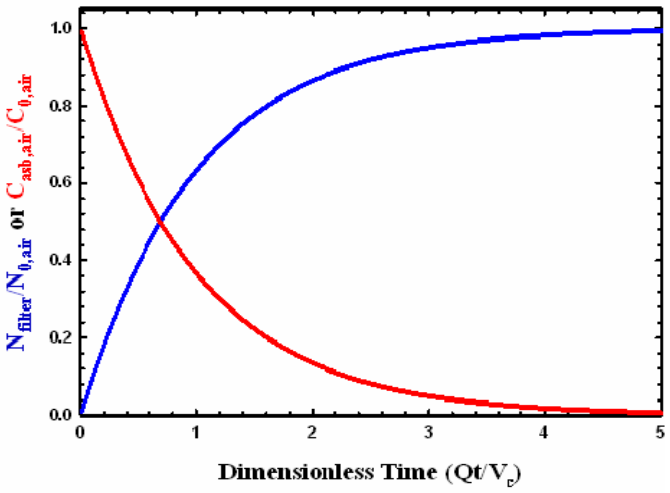

Figure 7. **Relative concentration of fibers in the air in the confined volume (red line) and the relative number of fibers captured by the filters as a function of dimensionless time.**

The cumulative number of asbestos fibers on the filters should increase in an exponential function of dimensionless time.

If a filter is placed in the system for a specific time interval, Δt, the number of fibers collected on that filter ($N_{filter}(t+\Delta t)-N_{filter}(t)$) can be obtained by application of Eq. (11). It follows that

$$\begin{aligned} N_{filter}(t+\Delta t) - N_{filter}(t) &= \left[N_{0.air} - N_{0.air}e^{-(Q/V_c)(t+\Delta t)}\right] - \left[N_{0.air} - N_{0.air}e^{-(Q/V_c)t}\right] \\ &= N_{0.air}e^{-(Q/V_c)t}\left(1 - e^{-(Q/V_c)\Delta t}\right) \end{aligned} \tag{14}$$

Thus, for the same sample sampling interval, the number of fibers collected should decrease with time Figure 8.

It should be pointed out that the air flow rate, Q, does not have to be constant. If the functional form of Q(t) is known, it can be substituted into (8) and integrated. One of the more common situations that will be encountered will be when Q is varied in a stepwise fashion. The integration can then be obtained in the same stepwise fashion to yield a series of recursive equations:

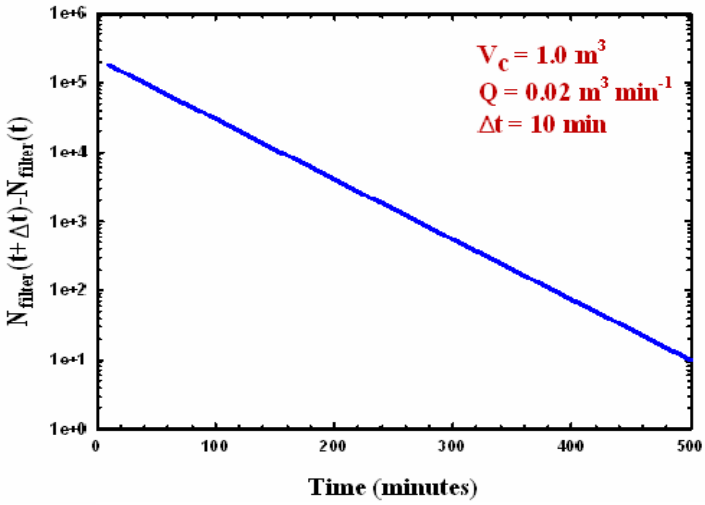

Figure 8. **Number of fibers captured by a filter over the time interval from t to t+Δt for Δt = 10 minutes and for t = 0 to 500 minutes**

Appendix E

TEM DATA for Fluidized Bed

Lab/Cor, Inc.
7619 6th Ave Nw
Seattle, WA 98117

Analysis Report Cover

Final Report

A Professional Service Corporation in the Northwest

Phone: (206) 781-0155
Fax: (206) 789-8424
http://www.labcor.net

Job Number: 070434 **SEA**

Report Number: 070434R06

Report Date: 6/7/2007

Client: Idaho National Laboratory

Address: PO Box 1625 MS 2107
Idaho Falls, ID 83415-2107

Project Name: RARE

Project Num:

PO Number:

Sub Project:

Enclosed please find results for samples submitted to our laboratory. A list of samples and analyses follows:

Lab/Cor Sample #	Client Sample # and Description	Analysis	Analysis Notes	Date Received:
070434 - S1	cleaning blank #1 -	ISO 10312, Direct		4/23/2007
070434 - S2	cleaning blank #2 -	ISO 10312, Direct		4/23/2007
070434 - S3	cleaning blank #3 -	ISO 10312, Direct		4/23/2007
070434 - S4	cleaning blank #4 -	ISO 10312, Direct		4/23/2007
070434 - S5	Lab blank #1 -	ISO 10312, Direct		4/23/2007
070434 - S6	Lab blank #2 -	ISO 10312, Direct		4/23/2007
070434 - S7	Lot blank #1 -	ISO 10312, Direct		4/23/2007
070434 - S8	Lot blank #2 -	ISO 10312, Direct		4/23/2007
070434 - S9	cleaning protocol 1 -	ISO 10312, Direct		4/23/2007
070434 - S10	cleaning protocol 2 -	ISO 10312, Direct		4/23/2007
070434 - S11	Sand blank -	ISO 10312, Direct		4/23/2007
070434 - S12	FB-4-R1 -	ISO 10312, Direct		4/23/2007
070434 - S13	FB-4-R2 -	ISO 10312, Direct		4/23/2007
070434 - S14	FB-4-R3 -	ISO 10312, Direct		4/23/2007
070434 - S15	FB-4-R4 -	ISO 10312, Direct		4/23/2007
070434 - S16	FB-4-R5 -	ISO 10312, Direct		4/23/2007
070434 - S17	FB-4-R6 -	ISO 10312, Direct		4/23/2007
070434 - S18	FB-4-R7 -	ISO 10312, Direct		4/23/2007
070434 - S19	FB-3-R1 -	ISO 10312, Direct		4/23/2007
070434 - S20	FB-3-R2 -	ISO 10312, Direct		4/23/2007
070434 - S21	FB-3-R3 -	ISO 10312, Direct		4/23/2007
070434 - S22	FB-3-R4 -	ISO 10312, Direct		4/23/2007
070434 - S23	FB-3-R5 -	ISO 10312, Direct		4/23/2007
070434 - S24	FB-3-R6 -	ISO 10312, Direct		4/23/2007
070434 - S25	FB-3-R7 -	ISO 10312, Direct		4/23/2007
070434 - S26	FB-2-R1 -	ISO 10312, Direct		4/23/2007
070434 - S27	FB-2-R2 -	ISO 10312, Direct		4/23/2007
070434 - S28	FB-2-R3 -	ISO 10312, Direct		4/23/2007
070434 - S29	FB-2-R4 -	ISO 10312, Direct		4/23/2007
070434 - S30	FB-2-R5 -	ISO 10312, Direct		4/23/2007
070434 - S31	FB-2-R6 -	ISO 10312, Direct		4/23/2007
070434 - S32	FB-2-R7 -	ISO 10312, Direct		4/23/2007
070434 - S33	FB-1-R1 -	ISO 10312, Direct		4/23/2007
070434 - S34	FB-1-R2 -	ISO 10312, Direct		4/23/2007
070434 - S35	FB-1-R3 -	ISO 10312, Direct		4/23/2007
070434 - S36	FB-1-R4 -	ISO 10312, Direct		4/23/2007
070434 - S37	FB-1-R5 -	ISO 10312, Direct		4/23/2007

Lab/Cor, Inc.
7619 6th Ave Nw
Seattle, WA 98117

Final Report

Phone: (206) 781-0155
Fax: (206) 789-8424
http://www.labcor.net

A Professional Service Corporation in the Northwest

Job Number: 070434 **SEA**
Client: Idaho National Laboratory
Project Name: RARE

Report Number: 070434R06
Report Date: 6/7/2007

070434 - S38	FB-1-R6 -	ISO 10312, Direct	4/23/2007
070434 - S39	FB-1-R7 -	ISO 10312, Direct	4/23/2007

ISO 10312, Direct - Preparation and analysis of the above samples was conducted in accordance with the ISO method 10312 (Direct) for the identification of asbestos. Briefly, the samples were collapsed with acetone, then etched in a low temperature plasma etcher to remove the top surface of the filter and other organics. The samples were carbon coated at high vacuum with a thin layer of carbon, placed on 200 mesh copper grids and allowed to dissolve in acetone until cleared of filter debris.

TEM analysis was performed using a transmission electron microscope equipped with an EDS X ray analyzer. The air samples were analyzed at various approximate screen magnifications of 5,000x for PCM equivalent structures, 10,000x for asbestos structures greater than 5.0 micrometer lengths, and 20,000x for asbestos structures greater than 0.5 micrometer lengths. An accelerating voltage of 100 KV was applied. The sizing of grid openings was performed on the microscope at a magnification of approximately 550X.

Disclaimer The results reported relate only to the samples tested or analyzed. Interpretation of these results is the sole responsibility of the client.

If further clarification of these results is needed, please call us. Thank you for allowing the staff at Lab/Cor, Inc. the opportunity to provide you with the analytical services.

Sincerely,

John Harris, M.P.H.
Laboratory Director

Lab/Cor, Inc.
7619 6th Ave Nw
Seattle, WA 98117

Final Report

Phone: (206) 781-0155
Fax: (206) 789-8424
http://www.labcor.net

A Professional Service Corporation in the Northwest

ISO 10312, Direct Summary Data

Job Number: 070434 **SEA**
Client: Idaho National Laboratory
Project Name: RARE

Report Number: 070434R06
Date Received: 4/23/2007

Lab/Cor Sample No.: S1

Client Sample No.: cleaning blank #1
Description:

Analyst(s)	Analysis Date
KM	4/30/2007

Volume (L) : 0
Lab Filter Area (mm2) : 385
Grid Openings Analyzed : 35
Average Grid Opening Area : 0.009
Area Analyzed (mm2) : 0.315
Analytical Sens. (struc/cc) : NA
Dectection Limit. (struc/cc) : NA

Structure Type	Filter Density (s/mm2)	Concen-tration* (struc/cc)	95% Confidence Interval (struc/cc)	Structure Count[1] Prim/Total	
Primary Asbestos Structures	0	Not Applicable	Not Applicable	0	
Total Asbestos Structures	0	Not Applicable	Not Applicable		0
PCM Equivalent Fibers-ISO	0	Not Applicable	Not Applicable		0
PCM Equivalent Fibers-NIOSH	0	Not Applicable	Not Applicable		0
PCM Equivalent Structures-ISO	0	Not Applicable	Not Applicable	0	
PCM Equivalent Structures-NIOSH	0	Not Applicable	Not Applicable	0	
Asbestos Structures >5um and 3:1	0	Not Applicable	Not Applicable	0	
Asbestos Fibers and Bundles > 5um and 3:1	0	Not Applicable	Not Applicable		0

[1] Concentration and 95% Confidence Level are calculated based upon the number showing under the Structure Count header.

Lab/Cor Sample No.: S2

Client Sample No.: cleaning blank #2
Description:

Analyst(s)	Analysis Date
KM	4/30/2007

Volume (L) : 0
Lab Filter Area (mm2) : 385
Grid Openings Analyzed : 35
Average Grid Opening Area : 0.009
Area Analyzed (mm2) : 0.315
Analytical Sens. (struc/cc) : NA
Dectection Limit. (struc/cc) : NA

Structure Type	Filter Density (s/mm2)	Concen-tration* (struc/cc)	95% Confidence Interval (struc/cc)	Structure Count[1] Prim/Total	
Primary Asbestos Structures	0	Not Applicable	Not Applicable	0	
Total Asbestos Structures	0	Not Applicable	Not Applicable		0
PCM Equivalent Fibers-ISO	0	Not Applicable	Not Applicable		0
PCM Equivalent Fibers-NIOSH	0	Not Applicable	Not Applicable		0
PCM Equivalent Structures-ISO	0	Not Applicable	Not Applicable	0	
PCM Equivalent Structures-NIOSH	0	Not Applicable	Not Applicable	0	
Asbestos Structures >5um and 3:1	0	Not Applicable	Not Applicable	0	
Asbestos Fibers and Bundles > 5um and 3:1	0	Not Applicable	Not Applicable		0

[1] Concentration and 95% Confidence Level are calculated based upon the number showing under the Structure Count header.

* One-sided upper 95% Poisson confidence limits may be used to calculate sample concentrations ([Struc count] * [Analytical Sensitivity]) when the structure count is below 4. The limits are: 0 str - 2.99, 1 str - 4.74, 2 str - 6.3, 3 str - 7.75

Lab/Cor, Inc.
7619 6th Ave Nw
Seattle, WA 98117

Final Report

Phone: (206) 781-0155
Fax: (206) 789-8424
http://www.labcor.net

A Professional Service Corporation in the Northwest

ISO 10312, Direct Summary Data

Job Number: 070434 **SEA**
Client: Idaho National Laboratory
Project Name: RARE

Report Number: 070434R06
Date Received: 4/23/2007

Lab/Cor Sample No.: S3

Client Sample No.: cleaning blank #3
Description:

Analyst(s)	Analysis Date
KM	5/1/2007

Volume (L) : 0
Lab Filter Area (mm2) : 385
Grid Openings Analyzed : 35
Average Grid Opening Area : 0.009
Area Analyzed (mm2) : 0.315
Analytical Sens. (struc/cc) : NA
Dectection Limit. (struc/cc) : NA

Structure Type	Filter Density (s/mm2)	Concen-tration* (struc/cc)	95% Confidence Interval (struc/cc)	Structure Count[1] Prim	Total
Primary Asbestos Structures	3.2	Not Applicable	Not Applicable	1	
Total Asbestos Structures	3.2	Not Applicable	Not Applicable		1
PCM Equivalent Fibers-ISO	3.2	Not Applicable	Not Applicable		1
PCM Equivalent Fibers-NIOSH	3.2	Not Applicable	Not Applicable		1
PCM Equivalent Structures-ISO	3.2	Not Applicable	Not Applicable	1	
PCM Equivalent Structures-NIOSH	3.2	Not Applicable	Not Applicable	1	
Asbestos Structures >5um and 3:1	3.2	Not Applicable	Not Applicable	1	
Asbestos Fibers and Bundles > 5um and 3:1	3.2	Not Applicable	Not Applicable		1

[1] Concentration and 95% Confidence Level are calculated based upon the number showing under the Structure Count header.

Lab/Cor Sample No.: S4

Client Sample No.: cleaning blank #4
Description:

Analyst(s)	Analysis Date
KM	5/1/2007

Volume (L) : 0
Lab Filter Area (mm2) : 385
Grid Openings Analyzed : 35
Average Grid Opening Area : 0.009
Area Analyzed (mm2) : 0.315
Analytical Sens. (struc/cc) : NA
Dectection Limit. (struc/cc) : NA

Structure Type	Filter Density (s/mm2)	Concen-tration* (struc/cc)	95% Confidence Interval (struc/cc)	Structure Count[1] Prim	Total
Primary Asbestos Structures	0	Not Applicable	Not Applicable	0	
Total Asbestos Structures	0	Not Applicable	Not Applicable		0
PCM Equivalent Fibers-ISO	0	Not Applicable	Not Applicable		0
PCM Equivalent Fibers-NIOSH	0	Not Applicable	Not Applicable		0
PCM Equivalent Structures-ISO	0	Not Applicable	Not Applicable	0	
PCM Equivalent Structures-NIOSH	0	Not Applicable	Not Applicable	0	
Asbestos Structures >5um and 3:1	0	Not Applicable	Not Applicable	0	
Asbestos Fibers and Bundles > 5um and 3:1	0	Not Applicable	Not Applicable		0

[1] Concentration and 95% Confidence Level are calculated based upon the number showing under the Structure Count header.

* One-sided upper 95% Poisson confidence limits may be used to calculate sample concentrations ([Struc count] * [Analytical Sensitivity]) when the structure count is below 4. The limits are: 0 str - 2.99, 1 str - 4.74, 2 str - 6.3, 3 str - 7.75

Lab/Cor, Inc.
7619 6th Ave Nw
Seattle, WA 98117

Final Report

Phone: (206) 781-0155
Fax: (206) 789-8424
http://www.labcor.net

A Professional Service Corporation in the Northwest

ISO 10312, Direct Summary Data

Job Number: 070434 **SEA**
Client: Idaho National Laboratory
Project Name: RARE

Report Number: 070434R06
Date Received: 4/23/2007

Lab/Cor Sample No.: S5

Client Sample No.: Lab blank #1
Description:

Analyst(s)	Analysis Date
KM	5/1/2007

Volume (L) : 0
Lab Filter Area (mm2) : 385
Grid Openings Analyzed : 35
Average Grid Opening Area : 0.009
Area Analyzed (mm2) : 0.315
Analytical Sens. (struc/cc) : NA
Dectection Limit. (struc/cc) : NA

Structure Type	Filter Density (s/mm2)	Concen-tration* (struc/cc)	95% Confidence Interval (struc/cc)	Structure Count[1] Prim/Total	
Primary Asbestos Structures	0	Not Applicable	Not Applicable	0	
Total Asbestos Structures	0	Not Applicable	Not Applicable		0
PCM Equivalent Fibers-ISO	0	Not Applicable	Not Applicable		0
PCM Equivalent Fibers-NIOSH	0	Not Applicable	Not Applicable		0
PCM Equivalent Structures-ISO	0	Not Applicable	Not Applicable	0	
PCM Equivalent Structures-NIOSH	0	Not Applicable	Not Applicable	0	
Asbestos Structures >5um and 3:1	0	Not Applicable	Not Applicable	0	
Asbestos Fibers and Bundles > 5um and 3:1	0	Not Applicable	Not Applicable		0

[1] Concentration and 95% Confidence Level are calculated based upon the number showing under the Structure Count header.

Lab/Cor Sample No.: S6

Client Sample No.: Lab blank #2
Description:

Analyst(s)	Analysis Date
KM	5/1/2007

Volume (L) : 0
Lab Filter Area (mm2) : 385
Grid Openings Analyzed : 35
Average Grid Opening Area : 0.009
Area Analyzed (mm2) : 0.315
Analytical Sens. (struc/cc) : NA
Dectection Limit. (struc/cc) : NA

Structure Type	Filter Density (s/mm2)	Concen-tration* (struc/cc)	95% Confidence Interval (struc/cc)	Structure Count[1] Prim/Total	
Primary Asbestos Structures	0	Not Applicable	Not Applicable	0	
Total Asbestos Structures	0	Not Applicable	Not Applicable		0
PCM Equivalent Fibers-ISO	0	Not Applicable	Not Applicable		0
PCM Equivalent Fibers-NIOSH	0	Not Applicable	Not Applicable		0
PCM Equivalent Structures-ISO	0	Not Applicable	Not Applicable	0	
PCM Equivalent Structures-NIOSH	0	Not Applicable	Not Applicable	0	
Asbestos Structures >5um and 3:1	0	Not Applicable	Not Applicable	0	
Asbestos Fibers and Bundles > 5um and 3:1	0	Not Applicable	Not Applicable		0

[1] Concentration and 95% Confidence Level are calculated based upon the number showing under the Structure Count header.

* One-sided upper 95% Poisson confidence limits may be used to calculate sample concentrations ([Struc count] * [Analytical Sensitivity]) when the structure count is below 4. The limits are: 0 str - 2.99, 1 str - 4.74, 2 str - 6.3, 3 str - 7.75

Lab/Cor, Inc.
7619 6th Ave Nw
Seattle, WA 98117

Final Report

Phone: (206) 781-0155
Fax: (206) 789-8424
http://www.labcor.net

A Professional Service Corporation in the Northwest

ISO 10312, Direct Summary Data

Job Number: 070434 **SEA**
Client: Idaho National Laboratory
Project Name: RARE

Report Number: 070434R06
Date Received: 4/23/2007

Lab/Cor Sample No.: S7

Client Sample No.: Lot blank #1
Description:

Analyst(s)	Analysis Date
KM	5/1/2007

Volume (L) : 0
Lab Filter Area (mm2) : 385
Grid Openings Analyzed : 35
Average Grid Opening Area : 0.009
Area Analyzed (mm2) : 0.315
Analytical Sens. (struc/cc) : NA
Dectection Limit. (struc/cc) : NA

Structure Type	Filter Density (s/mm2)	Concen-tration* (struc/cc)	95% Confidence Interval (struc/cc)	Structure Count[1] Prim/Total	
Primary Asbestos Structures	0	Not Applicable	Not Applicable	0	
Total Asbestos Structures	0	Not Applicable	Not Applicable		0
PCM Equivalent Fibers-ISO	0	Not Applicable	Not Applicable		0
PCM Equivalent Fibers-NIOSH	0	Not Applicable	Not Applicable		0
PCM Equivalent Structures-ISO	0	Not Applicable	Not Applicable	0	
PCM Equivalent Structures-NIOSH	0	Not Applicable	Not Applicable	0	
Asbestos Structures >5um and 3:1	0	Not Applicable	Not Applicable	0	
Asbestos Fibers and Bundles > 5um and 3:1	0	Not Applicable	Not Applicable		0

[1] Concentration and 95% Confidence Level are calculated based upon the number showing under the Structure Count header.

Lab/Cor Sample No.: S8

Client Sample No.: Lot blank #2
Description:

Analyst(s)	Analysis Date
KM	5/1/2007

Volume (L) : 0
Lab Filter Area (mm2) : 385
Grid Openings Analyzed : 35
Average Grid Opening Area : 0.009
Area Analyzed (mm2) : 0.315
Analytical Sens. (struc/cc) : NA
Dectection Limit. (struc/cc) : NA

Structure Type	Filter Density (s/mm2)	Concen-tration* (struc/cc)	95% Confidence Interval (struc/cc)	Structure Count[1] Prim/Total	
Primary Asbestos Structures	0	Not Applicable	Not Applicable	0	
Total Asbestos Structures	0	Not Applicable	Not Applicable		0
PCM Equivalent Fibers-ISO	0	Not Applicable	Not Applicable		0
PCM Equivalent Fibers-NIOSH	0	Not Applicable	Not Applicable		0
PCM Equivalent Structures-ISO	0	Not Applicable	Not Applicable	0	
PCM Equivalent Structures-NIOSH	0	Not Applicable	Not Applicable	0	
Asbestos Structures >5um and 3:1	0	Not Applicable	Not Applicable	0	
Asbestos Fibers and Bundles > 5um and 3:1	0	Not Applicable	Not Applicable		0

[1] Concentration and 95% Confidence Level are calculated based upon the number showing under the Structure Count header.

* One-sided upper 95% Poisson confidence limits may be used to calculate sample concentrations ([Struc count] * [Analytical Sensitivity]) when the structure count is below 4. The limits are: 0 str - 2.99, 1 str - 4.74, 2 str - 6.3, 3 str - 7.75

Lab/Cor, Inc.
7619 6th Ave Nw
Seattle, WA 98117

Final Report

Phone: (206) 781-0155
Fax: (206) 789-8424
http://www.labcor.net

A Professional Service Corporation in the Northwest

ISO 10312, Direct Summary Data

Job Number: 070434 **SEA**
Client: Idaho National Laboratory
Project Name: RARE

Report Number: 070434R06
Date Received: 4/23/2007

Lab/Cor Sample No.: S9

Client Sample No.: cleaning protocol 1
Description:

Analyst(s)	Analysis Date
KM	5/1/2007

Volume (L) : 0
Lab Filter Area (mm2) : 385
Grid Openings Analyzed : 35
Average Grid Opening Area : 0.009
Area Analyzed (mm2) : 0.315
Analytical Sens. (struc/cc) : NA
Dectection Limit. (struc/cc) : NA

Structure Type	Filter Density (s/mm2)	Concen-tration* (struc/cc)	95% Confidence Interval (struc/cc)	Structure Count[1] Prim/Total	
Primary Asbestos Structures	0	Not Applicable	Not Applicable	0	
Total Asbestos Structures	0	Not Applicable	Not Applicable		0
PCM Equivalent Fibers-ISO	0	Not Applicable	Not Applicable		0
PCM Equivalent Fibers-NIOSH	0	Not Applicable	Not Applicable		0
PCM Equivalent Structures-ISO	0	Not Applicable	Not Applicable	0	
PCM Equivalent Structures-NIOSH	0	Not Applicable	Not Applicable	0	
Asbestos Structures >5um and 3:1	0	Not Applicable	Not Applicable	0	
Asbestos Fibers and Bundles > 5um and 3:1	0	Not Applicable	Not Applicable		0

[1] Concentration and 95% Confidence Level are calculated based upon the number showing under the Structure Count header.

Lab/Cor Sample No.: S10

Client Sample No.: cleaning protocol 2
Description:

Analyst(s)	Analysis Date
KM	5/1/2007

Volume (L) : 0
Lab Filter Area (mm2) : 385
Grid Openings Analyzed : 35
Average Grid Opening Area : 0.009
Area Analyzed (mm2) : 0.315
Analytical Sens. (struc/cc) : NA
Dectection Limit. (struc/cc) : NA

Structure Type	Filter Density (s/mm2)	Concen-tration* (struc/cc)	95% Confidence Interval (struc/cc)	Structure Count[1] Prim/Total	
Primary Asbestos Structures	6.3	Not Applicable	Not Applicable	2	
Total Asbestos Structures	6.3	Not Applicable	Not Applicable		2
PCM Equivalent Fibers-ISO	6.3	Not Applicable	Not Applicable		2
PCM Equivalent Fibers-NIOSH	6.3	Not Applicable	Not Applicable		2
PCM Equivalent Structures-ISO	3.2	Not Applicable	Not Applicable	1	
PCM Equivalent Structures-NIOSH	3.2	Not Applicable	Not Applicable	1	
Asbestos Structures >5um and 3:1	6.3	Not Applicable	Not Applicable	2	
Asbestos Fibers and Bundles > 5um and 3:1	6.3	Not Applicable	Not Applicable		2

[1] Concentration and 95% Confidence Level are calculated based upon the number showing under the Structure Count header.

* One-sided upper 95% Poisson confidence limits may be used to calculate sample concentrations ([Struc count] * [Analytical Sensitivity]) when the structure count is below 4. The limits are: 0 str - 2.99, 1 str - 4.74, 2 str - 6.3, 3 str - 7.75

Lab/Cor, Inc.
7619 6th Ave Nw
Seattle, WA 98117

Final Report

Phone: (206) 781-0155
Fax: (206) 789-8424
http://www.labcor.net

A Professional Service Corporation in the Northwest

ISO 10312, Direct Summary Data

Job Number: 070434 **SEA**
Client: Idaho National Laboratory
Project Name: RARE

Report Number: 070434R06
Date Received: 4/23/2007

Lab/Cor Sample No.: S11

Client Sample No.: Sand blank
Description:

Analyst(s)	Analysis Date
KM	5/1/2007

Volume (L) : 0
Lab Filter Area (mm2) : 385
Grid Openings Analyzed : 35
Average Grid Opening Area : 0.009
Area Analyzed (mm2) : 0.315
Analytical Sens. (struc/cc) : NA
Dectection Limit. (struc/cc) : NA

Structure Type	Filter Density (s/mm2)	Concen-tration* (struc/cc)	95% Confidence Interval (struc/cc)	Structure Count[1] Prim/Total	
Primary Asbestos Structures	0	Not Applicable	Not Applicable	0	
Total Asbestos Structures	0	Not Applicable	Not Applicable		0
PCM Equivalent Fibers-ISO	0	Not Applicable	Not Applicable		0
PCM Equivalent Fibers-NIOSH	0	Not Applicable	Not Applicable		0
PCM Equivalent Structures-ISO	0	Not Applicable	Not Applicable	0	
PCM Equivalent Structures-NIOSH	0	Not Applicable	Not Applicable	0	
Asbestos Structures >5um and 3:1	0	Not Applicable	Not Applicable	0	
Asbestos Fibers and Bundles > 5um and 3:1	0	Not Applicable	Not Applicable		0

[1] Concentration and 95% Confidence Level are calculated based upon the number showing under the Structure Count header.

Lab/Cor Sample No.: S12

Client Sample No.: FB-4-R1
Description:

Analyst(s)	Analysis Date
KM	5/7/2007

Volume (L) : 0
Lab Filter Area (mm2) : 385
Grid Openings Analyzed : 35
Average Grid Opening Area : 0.009
Area Analyzed (mm2) : 0.315
Analytical Sens. (struc/cc) : NA
Dectection Limit. (struc/cc) : NA

Structure Type	Filter Density (s/mm2)	Concen-tration* (struc/cc)	95% Confidence Interval (struc/cc)	Structure Count[1] Prim/Total	
Primary Asbestos Structures	54	Not Applicable	Not Applicable	17	
Total Asbestos Structures	66.7	Not Applicable	Not Applicable		21
PCM Equivalent Fibers-ISO	15.9	Not Applicable	Not Applicable		5
PCM Equivalent Fibers-NIOSH	15.9	Not Applicable	Not Applicable		5
PCM Equivalent Structures-ISO	9.5	Not Applicable	Not Applicable	3	
PCM Equivalent Structures-NIOSH	12.7	Not Applicable	Not Applicable	4	
Asbestos Structures >5um and 3:1	19	Not Applicable	Not Applicable	6	
Asbestos Fibers and Bundles > 5um and 3:1	19	Not Applicable	Not Applicable		6

[1] Concentration and 95% Confidence Level are calculated based upon the number showing under the Structure Count header.

* One-sided upper 95% Poisson confidence limits may be used to calculate sample concentrations ([Struc count] * [Analytical Sensitivity]) when the structure count is below 4. The limits are: 0 str - 2.99, 1 str - 4.74, 2 str - 6.3, 3 str - 7.75

Lab/Cor, Inc.
7619 6th Ave Nw
Seattle, WA 98117

Final Report

Phone: (206) 781-0155
Fax: (206) 789-8424
http://www.labcor.net

A Professional Service Corporation in the Northwest

ISO 10312, Direct Summary Data

Job Number: 070434 **SEA**
Client: Idaho National Laboratory
Project Name: RARE

Report Number: 070434R06
Date Received: 4/23/2007

Lab/Cor Sample No.: S13

Client Sample No.: FB-4-R2
Description:

Analyst(s)	Analysis Date
KM	5/7/2007
KM	5/8/2007

Volume (L) : 0
Lab Filter Area (mm2) : 385
Grid Openings Analyzed : 35
Average Grid Opening Area : 0.009
Area Analyzed (mm2) : 0.315
Analytical Sens. (struc/cc) : NA
Dectection Limit. (struc/cc) : NA

Structure Type	Filter Density (s/mm2)	Concen-tration* (struc/cc)	95% Confidence Interval (struc/cc)	Structure Count[1] Prim/Total	
Primary Asbestos Structures	22.2	Not Applicable	Not Applicable	7	
Total Asbestos Structures	22.2	Not Applicable	Not Applicable		7
PCM Equivalent Fibers-ISO	12.7	Not Applicable	Not Applicable		4
PCM Equivalent Fibers-NIOSH	12.7	Not Applicable	Not Applicable		4
PCM Equivalent Structures-ISO	12.7	Not Applicable	Not Applicable	4	
PCM Equivalent Structures-NIOSH	12.7	Not Applicable	Not Applicable	4	
Asbestos Structures >5um and 3:1	9.5	Not Applicable	Not Applicable	3	
Asbestos Fibers and Bundles > 5um and 3:1	9.5	Not Applicable	Not Applicable		3

[1] Concentration and 95% Confidence Level are calculated based upon the number showing under the Structure Count header.

Lab/Cor Sample No.: S14

Client Sample No.: FB-4-R3
Description:

Analyst(s)	Analysis Date
KM	5/8/2007

Volume (L) : 0
Lab Filter Area (mm2) : 385
Grid Openings Analyzed : 35
Average Grid Opening Area : 0.009
Area Analyzed (mm2) : 0.315
Analytical Sens. (struc/cc) : NA
Dectection Limit. (struc/cc) : NA

Structure Type	Filter Density (s/mm2)	Concen-tration* (struc/cc)	95% Confidence Interval (struc/cc)	Structure Count[1] Prim/Total	
Primary Asbestos Structures	34.9	Not Applicable	Not Applicable	11	
Total Asbestos Structures	34.9	Not Applicable	Not Applicable		11
PCM Equivalent Fibers-ISO	15.9	Not Applicable	Not Applicable		5
PCM Equivalent Fibers-NIOSH	15.9	Not Applicable	Not Applicable		5
PCM Equivalent Structures-ISO	9.5	Not Applicable	Not Applicable	3	
PCM Equivalent Structures-NIOSH	9.5	Not Applicable	Not Applicable	3	
Asbestos Structures >5um and 3:1	15.9	Not Applicable	Not Applicable	5	
Asbestos Fibers and Bundles > 5um and 3:1	12.7	Not Applicable	Not Applicable		4

[1] Concentration and 95% Confidence Level are calculated based upon the number showing under the Structure Count header.

* One-sided upper 95% Poisson confidence limits may be used to calculate sample concentrations ([Struc count] * [Analytical Sensitivity]) when the structure count is below 4. The limits are: 0 str - 2.99, 1 str - 4.74, 2 str - 6.3, 3 str - 7.75

Lab/Cor, Inc.
7619 6th Ave Nw
Seattle, WA 98117

Final Report

Phone: (206) 781-0155
Fax: (206) 789-8424
http://www.labcor.net

A Professional Service Corporation in the Northwest

ISO 10312, Direct Summary Data

Job Number: 070434 **SEA**
Client: Idaho National Laboratory
Project Name: RARE

Report Number: 070434R06
Date Received: 4/23/2007

Lab/Cor Sample No.: S15

Client Sample No.: FB-4-R4
Description:

Analyst(s)	Analysis Date
KM	5/9/2007

Volume (L) : 0
Lab Filter Area (mm2) : 385
Grid Openings Analyzed : 35
Average Grid Opening Area : 0.009
Area Analyzed (mm2) : 0.315
Analytical Sens. (struc/cc) : NA
Dectection Limit. (struc/cc) : NA

Structure Type	Filter Density (s/mm2)	Concen-tration* (struc/cc)	95% Confidence Interval (struc/cc)	Structure Count[1] Prim	Total
Primary Asbestos Structures	12.7	Not Applicable	Not Applicable	4	
Total Asbestos Structures	12.7	Not Applicable	Not Applicable		4
PCM Equivalent Fibers-ISO	3.2	Not Applicable	Not Applicable		1
PCM Equivalent Fibers-NIOSH	3.2	Not Applicable	Not Applicable		1
PCM Equivalent Structures-ISO	3.2	Not Applicable	Not Applicable	1	
PCM Equivalent Structures-NIOSH	3.2	Not Applicable	Not Applicable	1	
Asbestos Structures >5um and 3:1	6.3	Not Applicable	Not Applicable	2	
Asbestos Fibers and Bundles > 5um and 3:1	3.2	Not Applicable	Not Applicable		1

[1] Concentration and 95% Confidence Level are calculated based upon the number showing under the Structure Count header.

Lab/Cor Sample No.: S16

Client Sample No.: FB-4-R5
Description:

Analyst(s)	Analysis Date
KM	5/9/2007

Volume (L) : 0
Lab Filter Area (mm2) : 385
Grid Openings Analyzed : 35
Average Grid Opening Area : 0.009
Area Analyzed (mm2) : 0.315
Analytical Sens. (struc/cc) : NA
Dectection Limit. (struc/cc) : NA

Structure Type	Filter Density (s/mm2)	Concen-tration* (struc/cc)	95% Confidence Interval (struc/cc)	Structure Count[1] Prim	Total
Primary Asbestos Structures	15.9	Not Applicable	Not Applicable	5	
Total Asbestos Structures	15.9	Not Applicable	Not Applicable		5
PCM Equivalent Fibers-ISO	9.5	Not Applicable	Not Applicable		3
PCM Equivalent Fibers-NIOSH	9.5	Not Applicable	Not Applicable		3
PCM Equivalent Structures-ISO	6.3	Not Applicable	Not Applicable	2	
PCM Equivalent Structures-NIOSH	6.3	Not Applicable	Not Applicable	2	
Asbestos Structures >5um and 3:1	12.7	Not Applicable	Not Applicable	4	
Asbestos Fibers and Bundles > 5um and 3:1	9.5	Not Applicable	Not Applicable		3

[1] Concentration and 95% Confidence Level are calculated based upon the number showing under the Structure Count header.

* One-sided upper 95% Poisson confidence limits may be used to calculate sample concentrations ([Struc count] * [Analytical Sensitivity]) when the structure count is below 4. The limits are: 0 str - 2.99, 1 str - 4.74, 2 str - 6.3, 3 str - 7.75

Lab/Cor, Inc.
7619 6th Ave Nw
Seattle, WA 98117

Final Report

Phone: (206) 781-0155
Fax: (206) 789-8424
http://www.labcor.net

A Professional Service Corporation in the Northwest

ISO 10312, Direct Summary Data

Job Number: 070434 **SEA**
Client: Idaho National Laboratory
Project Name: RARE

Report Number: 070434R06
Date Received: 4/23/2007

Lab/Cor Sample No.: S17

Client Sample No.: FB-4-R6
Description:

Analyst(s)	Analysis Date
KM	5/10/2007
KM	5/11/2007

Volume (L) : 0
Lab Filter Area (mm2) : 385
Grid Openings Analyzed : 35
Average Grid Opening Area : 0.009
Area Analyzed (mm2) : 0.315
Analytical Sens. (struc/cc) : NA
Dectection Limit. (struc/cc) : NA

Structure Type	Filter Density (s/mm2)	Concen-tration* (struc/cc)	95% Confidence Interval (struc/cc)	Structure Count[1] Prim	Total
Primary Asbestos Structures	31.7	Not Applicable	Not Applicable	10	
Total Asbestos Structures	31.7	Not Applicable	Not Applicable		10
PCM Equivalent Fibers-ISO	6.3	Not Applicable	Not Applicable		2
PCM Equivalent Fibers-NIOSH	6.3	Not Applicable	Not Applicable		2
PCM Equivalent Structures-ISO	3.2	Not Applicable	Not Applicable	1	
PCM Equivalent Structures-NIOSH	3.2	Not Applicable	Not Applicable	1	
Asbestos Structures >5um and 3:1	9.5	Not Applicable	Not Applicable	3	
Asbestos Fibers and Bundles > 5um and 3:1	6.3	Not Applicable	Not Applicable		2

[1] Concentration and 95% Confidence Level are calculated based upon the number showing under the Structure Count header.

Lab/Cor Sample No.: S18

Client Sample No.: FB-4-R7
Description:

Analyst(s)	Analysis Date
KM	5/11/2007

Volume (L) : 0
Lab Filter Area (mm2) : 385
Grid Openings Analyzed : 35
Average Grid Opening Area : 0.009
Area Analyzed (mm2) : 0.315
Analytical Sens. (struc/cc) : NA
Dectection Limit. (struc/cc) : NA

Structure Type	Filter Density (s/mm2)	Concen-tration* (struc/cc)	95% Confidence Interval (struc/cc)	Structure Count[1] Prim	Total
Primary Asbestos Structures	9.5	Not Applicable	Not Applicable	3	
Total Asbestos Structures	9.5	Not Applicable	Not Applicable		3
PCM Equivalent Fibers-ISO	0	Not Applicable	Not Applicable		0
PCM Equivalent Fibers-NIOSH	0	Not Applicable	Not Applicable		0
PCM Equivalent Structures-ISO	0	Not Applicable	Not Applicable	0	
PCM Equivalent Structures-NIOSH	0	Not Applicable	Not Applicable	0	
Asbestos Structures >5um and 3:1	3.2	Not Applicable	Not Applicable	1	
Asbestos Fibers and Bundles > 5um and 3:1	0	Not Applicable	Not Applicable		0

[1] Concentration and 95% Confidence Level are calculated based upon the number showing under the Structure Count header.

* One-sided upper 95% Poisson confidence limits may be used to calculate sample concentrations ([Struc count] * [Analytical Sensitivity]) when the structure count is below 4. The limits are: 0 str - 2.99, 1 str - 4.74, 2 str - 6.3, 3 str - 7.75

Lab/Cor, Inc.
7619 6th Ave Nw
Seattle, WA 98117

Final Report

Phone: (206) 781-0155
Fax: (206) 789-8424
http://www.labcor.net

A Professional Service Corporation in the Northwest

ISO 10312, Direct Summary Data

Job Number: 070434 **SEA**
Client: Idaho National Laboratory
Project Name: RARE

Report Number: 070434R06
Date Received: 4/23/2007

Lab/Cor Sample No.: S19

Client Sample No.: FB-3-R1
Description:

Analyst(s)	Analysis Date
KM	5/16/2007
KM	5/17/2007

Volume (L) : 0
Lab Filter Area (mm2) : 385
Grid Openings Analyzed : 35
Average Grid Opening Area : 0.009
Area Analyzed (mm2) : 0.315
Analytical Sens. (struc/cc) : NA
Dectection Limit. (struc/cc) : NA

Structure Type	Filter Density (s/mm2)	Concen-tration* (struc/cc)	95% Confidence Interval (struc/cc)	Structure Count[1] Prim/Total	
Primary Asbestos Structures	0	Not Applicable	Not Applicable	0	
Total Asbestos Structures	0	Not Applicable	Not Applicable		0
PCM Equivalent Fibers-ISO	0	Not Applicable	Not Applicable		0
PCM Equivalent Fibers-NIOSH	0	Not Applicable	Not Applicable		0
PCM Equivalent Structures-ISO	0	Not Applicable	Not Applicable	0	
PCM Equivalent Structures-NIOSH	0	Not Applicable	Not Applicable	0	
Asbestos Structures >5um and 3:1	0	Not Applicable	Not Applicable	0	
Asbestos Fibers and Bundles > 5um and 3:1	0	Not Applicable	Not Applicable		0

[1] Concentration and 95% Confidence Level are calculated based upon the number showing under the Structure Count header.

Lab/Cor Sample No.: S20

Client Sample No.: FB-3-R2
Description:

Analyst(s)	Analysis Date
KM	5/17/2007

Volume (L) : 0
Lab Filter Area (mm2) : 385
Grid Openings Analyzed : 35
Average Grid Opening Area : 0.009
Area Analyzed (mm2) : 0.315
Analytical Sens. (struc/cc) : NA
Dectection Limit. (struc/cc) : NA

Structure Type	Filter Density (s/mm2)	Concen-tration* (struc/cc)	95% Confidence Interval (struc/cc)	Structure Count[1] Prim/Total	
Primary Asbestos Structures	168.3	Not Applicable	Not Applicable	53	
Total Asbestos Structures	177.8	Not Applicable	Not Applicable		56
PCM Equivalent Fibers-ISO	85.7	Not Applicable	Not Applicable		27
PCM Equivalent Fibers-NIOSH	85.7	Not Applicable	Not Applicable		27
PCM Equivalent Structures-ISO	66.7	Not Applicable	Not Applicable	21	
PCM Equivalent Structures-NIOSH	66.7	Not Applicable	Not Applicable	21	
Asbestos Structures >5um and 3:1	76.2	Not Applicable	Not Applicable	24	
Asbestos Fibers and Bundles > 5um and 3:1	69.8	Not Applicable	Not Applicable		22

[1] Concentration and 95% Confidence Level are calculated based upon the number showing under the Structure Count header.

* One-sided upper 95% Poisson confidence limits may be used to calculate sample concentrations ([Struc count] * [Analytical Sensitivity]) when the structure count is below 4. The limits are: 0 str - 2.99, 1 str - 4.74, 2 str - 6.3, 3 str - 7.75

Lab/Cor, Inc.
7619 6th Ave Nw
Seattle, WA 98117

Final Report

Phone: (206) 781-0155
Fax: (206) 789-8424
http://www.labcor.net

A Professional Service Corporation in the Northwest

ISO 10312, Direct Summary Data

Job Number: 070434 **SEA**
Client: Idaho National Laboratory
Project Name: RARE

Report Number: 070434R06
Date Received: 4/23/2007

Lab/Cor Sample No.: S21

Client Sample No.: FB-3-R3
Description:

Analyst(s)	Analysis Date
KM	5/21/2007

Volume (L) : 0
Lab Filter Area (mm2) : 385
Grid Openings Analyzed : 35
Average Grid Opening Area : 0.009
Area Analyzed (mm2) : 0.315
Analytical Sens. (struc/cc) : NA
Dectection Limit. (struc/cc) : NA

Structure Type	Filter Density (s/mm2)	Concen-tration* (struc/cc)	95% Confidence Interval (struc/cc)	Structure Count[1] Prim/Total	
Primary Asbestos Structures	0	Not Applicable	Not Applicable	0	
Total Asbestos Structures	0	Not Applicable	Not Applicable		0
PCM Equivalent Fibers-ISO	0	Not Applicable	Not Applicable		0
PCM Equivalent Fibers-NIOSH	0	Not Applicable	Not Applicable		0
PCM Equivalent Structures-ISO	0	Not Applicable	Not Applicable	0	
PCM Equivalent Structures-NIOSH	0	Not Applicable	Not Applicable	0	
Asbestos Structures >5um and 3:1	0	Not Applicable	Not Applicable	0	
Asbestos Fibers and Bundles > 5um and 3:1	0	Not Applicable	Not Applicable		0

[1] Concentration and 95% Confidence Level are calculated based upon the number showing under the Structure Count header.

Lab/Cor Sample No.: S22

Client Sample No.: FB-3-R4
Description:

Analyst(s)	Analysis Date
KM	5/21/2007
KM	5/22/2007

Volume (L) : 0
Lab Filter Area (mm2) : 385
Grid Openings Analyzed : 35
Average Grid Opening Area : 0.009
Area Analyzed (mm2) : 0.315
Analytical Sens. (struc/cc) : NA
Dectection Limit. (struc/cc) : NA

Structure Type	Filter Density (s/mm2)	Concen-tration* (struc/cc)	95% Confidence Interval (struc/cc)	Structure Count[1] Prim/Total	
Primary Asbestos Structures	0	Not Applicable	Not Applicable	0	
Total Asbestos Structures	0	Not Applicable	Not Applicable		0
PCM Equivalent Fibers-ISO	0	Not Applicable	Not Applicable		0
PCM Equivalent Fibers-NIOSH	0	Not Applicable	Not Applicable		0
PCM Equivalent Structures-ISO	0	Not Applicable	Not Applicable	0	
PCM Equivalent Structures-NIOSH	0	Not Applicable	Not Applicable	0	
Asbestos Structures >5um and 3:1	0	Not Applicable	Not Applicable	0	
Asbestos Fibers and Bundles > 5um and 3:1	0	Not Applicable	Not Applicable		0

[1] Concentration and 95% Confidence Level are calculated based upon the number showing under the Structure Count header.

* One-sided upper 95% Poisson confidence limits may be used to calculate sample concentrations ([Struc count] * [Analytical Sensitivity]) when the structure count is below 4. The limits are: 0 str - 2.99, 1 str - 4.74, 2 str - 6.3, 3 str - 7.75

Lab/Cor, Inc.
7619 6th Ave Nw
Seattle, WA 98117

Final Report

Phone: (206) 781-0155
Fax: (206) 789-8424
http://www.labcor.net

A Professional Service Corporation in the Northwest

ISO 10312, Direct Summary Data

Job Number: 070434 **SEA**
Client: Idaho National Laboratory
Project Name: RARE

Report Number: 070434R06
Date Received: 4/23/2007

Lab/Cor Sample No.: S23

Client Sample No.: FB-3-R5
Description:

Analyst(s)	Analysis Date
KM	5/22/2007

Volume (L) : 0
Lab Filter Area (mm2) : 385
Grid Openings Analyzed : 35
Average Grid Opening Area : 0.009
Area Analyzed (mm2) : 0.315
Analytical Sens. (struc/cc) : NA
Dectection Limit. (struc/cc) : NA

Structure Type	Filter Density (s/mm2)	Concen-tration* (struc/cc)	95% Confidence Interval (struc/cc)	Structure Count[1] Prim	Total
Primary Asbestos Structures	76.2	Not Applicable	Not Applicable	24	
Total Asbestos Structures	76.2	Not Applicable	Not Applicable		24
PCM Equivalent Fibers-ISO	50.8	Not Applicable	Not Applicable		16
PCM Equivalent Fibers-NIOSH	54	Not Applicable	Not Applicable		17
PCM Equivalent Structures-ISO	44.4	Not Applicable	Not Applicable	14	
PCM Equivalent Structures-NIOSH	50.8	Not Applicable	Not Applicable	16	
Asbestos Structures >5um and 3:1	50.8	Not Applicable	Not Applicable	16	
Asbestos Fibers and Bundles > 5um and 3:1	44.4	Not Applicable	Not Applicable		14

[1] Concentration and 95% Confidence Level are calculated based upon the number showing under the Structure Count header.

Lab/Cor Sample No.: S24

Client Sample No.: FB-3-R6
Description:

Analyst(s)	Analysis Date
KM	5/24/2007

Volume (L) : 0
Lab Filter Area (mm2) : 385
Grid Openings Analyzed : 35
Average Grid Opening Area : 0.009
Area Analyzed (mm2) : 0.315
Analytical Sens. (struc/cc) : NA
Dectection Limit. (struc/cc) : NA

Structure Type	Filter Density (s/mm2)	Concen-tration* (struc/cc)	95% Confidence Interval (struc/cc)	Structure Count[1] Prim	Total
Primary Asbestos Structures	0	Not Applicable	Not Applicable	0	
Total Asbestos Structures	0	Not Applicable	Not Applicable		0
PCM Equivalent Fibers-ISO	0	Not Applicable	Not Applicable		0
PCM Equivalent Fibers-NIOSH	0	Not Applicable	Not Applicable		0
PCM Equivalent Structures-ISO	0	Not Applicable	Not Applicable	0	
PCM Equivalent Structures-NIOSH	0	Not Applicable	Not Applicable	0	
Asbestos Structures >5um and 3:1	0	Not Applicable	Not Applicable	0	
Asbestos Fibers and Bundles > 5um and 3:1	0	Not Applicable	Not Applicable		0

[1] Concentration and 95% Confidence Level are calculated based upon the number showing under the Structure Count header.

* One-sided upper 95% Poisson confidence limits may be used to calculate sample concentrations ([Struc count] * [Analytical Sensitivity]) when the structure count is below 4. The limits are: 0 str - 2.99, 1 str - 4.74, 2 str - 6.3, 3 str - 7.75

Lab/Cor, Inc.
7619 6th Ave Nw
Seattle, WA 98117

Final Report

Phone: (206) 781-0155
Fax: (206) 789-8424
http://www.labcor.net

A Professional Service Corporation in the Northwest

ISO 10312, Direct Summary Data

Job Number: 070434 **SEA**
Client: Idaho National Laboratory
Project Name: RARE

Report Number: 070434R06
Date Received: 4/23/2007

Lab/Cor Sample No.: S25

Client Sample No.: FB-3-R7
Description:

Analyst(s)	Analysis Date
KM	5/24/2007
KM	5/25/2007

Volume (L) : 0
Lab Filter Area (mm2) : 385
Grid Openings Analyzed : 35
Average Grid Opening Area : 0.009
Area Analyzed (mm2) : 0.315
Analytical Sens. (struc/cc) : NA
Dectection Limit. (struc/cc) : NA

Structure Type	Filter Density (s/mm2)	Concen-tration* (struc/cc)	95% Confidence Interval (struc/cc)	Structure Count[1] Prim	Total
Primary Asbestos Structures	60.3	Not Applicable	Not Applicable	19	
Total Asbestos Structures	63.5	Not Applicable	Not Applicable		20
PCM Equivalent Fibers-ISO	31.7	Not Applicable	Not Applicable		10
PCM Equivalent Fibers-NIOSH	28.6	Not Applicable	Not Applicable		9
PCM Equivalent Structures-ISO	15.9	Not Applicable	Not Applicable	5	
PCM Equivalent Structures-NIOSH	15.9	Not Applicable	Not Applicable	5	
Asbestos Structures >5um and 3:1	31.7	Not Applicable	Not Applicable	10	
Asbestos Fibers and Bundles > 5um and 3:1	31.7	Not Applicable	Not Applicable		10

[1] Concentration and 95% Confidence Level are calculated based upon the number showing under the Structure Count header.

Lab/Cor Sample No.: S26

Client Sample No.: FB-2-R1
Description:

Analyst(s)	Analysis Date
KM	5/25/2007

Volume (L) : 0
Lab Filter Area (mm2) : 385
Grid Openings Analyzed : 35
Average Grid Opening Area : 0.009
Area Analyzed (mm2) : 0.315
Analytical Sens. (struc/cc) : NA
Dectection Limit. (struc/cc) : NA

Structure Type	Filter Density (s/mm2)	Concen-tration* (struc/cc)	95% Confidence Interval (struc/cc)	Structure Count[1] Prim	Total
Primary Asbestos Structures	634.9	Not Applicable	Not Applicable	200	
Total Asbestos Structures	666.7	Not Applicable	Not Applicable		210
PCM Equivalent Fibers-ISO	342.9	Not Applicable	Not Applicable		108
PCM Equivalent Fibers-NIOSH	358.7	Not Applicable	Not Applicable		113
PCM Equivalent Structures-ISO	244.4	Not Applicable	Not Applicable	77	
PCM Equivalent Structures-NIOSH	257.1	Not Applicable	Not Applicable	81	
Asbestos Structures >5um and 3:1	307.9	Not Applicable	Not Applicable	97	
Asbestos Fibers and Bundles > 5um and 3:1	276.2	Not Applicable	Not Applicable		87

[1] Concentration and 95% Confidence Level are calculated based upon the number showing under the Structure Count header.

* One-sided upper 95% Poisson confidence limits may be used to calculate sample concentrations ([Struc count] * [Analytical Sensitivity]) when the structure count is below 4. The limits are: 0 str - 2.99, 1 str - 4.74, 2 str - 6.3, 3 str - 7.75

Lab/Cor, Inc.
7619 6th Ave Nw
Seattle, WA 98117

Final Report

Phone: (206) 781-0155
Fax: (206) 789-8424
http://www.labcor.net

A Professional Service Corporation in the Northwest

ISO 10312, Direct Summary Data

Job Number: 070434 **SEA**
Client: Idaho National Laboratory
Project Name: RARE

Report Number: 070434R06
Date Received: 4/23/2007

Lab/Cor Sample No.: S27

Client Sample No.: FB-2-R2
Description:

Analyst(s)	Analysis Date
KM	5/30/2007

Volume (L) : 0
Lab Filter Area (mm2) : 385
Grid Openings Analyzed : 35
Average Grid Opening Area : 0.009
Area Analyzed (mm2) : 0.315
Analytical Sens. (struc/cc) : NA
Dectection Limit. (struc/cc) : NA

Structure Type	Filter Density (s/mm2)	Concen-tration* (struc/cc)	95% Confidence Interval (struc/cc)	Structure Count[1] Prim/Total	
Primary Asbestos Structures	498.4	Not Applicable	Not Applicable	157	
Total Asbestos Structures	527	Not Applicable	Not Applicable		166
PCM Equivalent Fibers-ISO	298.4	Not Applicable	Not Applicable		94
PCM Equivalent Fibers-NIOSH	320.6	Not Applicable	Not Applicable		101
PCM Equivalent Structures-ISO	238.1	Not Applicable	Not Applicable	75	
PCM Equivalent Structures-NIOSH	269.8	Not Applicable	Not Applicable	85	
Asbestos Structures >5um and 3:1	273	Not Applicable	Not Applicable	86	
Asbestos Fibers and Bundles > 5um and 3:1	257.1	Not Applicable	Not Applicable		81

[1] Concentration and 95% Confidence Level are calculated based upon the number showing under the Structure Count header.

Lab/Cor Sample No.: S28

Client Sample No.: FB-2-R3
Description:

Analyst(s)	Analysis Date
KM	6/1/2007
KM	6/4/2007

Volume (L) : 0
Lab Filter Area (mm2) : 385
Grid Openings Analyzed : 35
Average Grid Opening Area : 0.009
Area Analyzed (mm2) : 0.315
Analytical Sens. (struc/cc) : NA
Dectection Limit. (struc/cc) : NA

Structure Type	Filter Density (s/mm2)	Concen-tration* (struc/cc)	95% Confidence Interval (struc/cc)	Structure Count[1] Prim/Total	
Primary Asbestos Structures	660.3	Not Applicable	Not Applicable	208	
Total Asbestos Structures	663.5	Not Applicable	Not Applicable		209
PCM Equivalent Fibers-ISO	257.1	Not Applicable	Not Applicable		81
PCM Equivalent Fibers-NIOSH	273	Not Applicable	Not Applicable		86
PCM Equivalent Structures-ISO	244.4	Not Applicable	Not Applicable	77	
PCM Equivalent Structures-NIOSH	260.3	Not Applicable	Not Applicable	82	
Asbestos Structures >5um and 3:1	257.1	Not Applicable	Not Applicable	81	
Asbestos Fibers and Bundles > 5um and 3:1	231.7	Not Applicable	Not Applicable		73

[1] Concentration and 95% Confidence Level are calculated based upon the number showing under the Structure Count header.

* One-sided upper 95% Poisson confidence limits may be used to calculate sample concentrations ([Struc count] * [Analytical Sensitivity]) when the structure count is below 4. The limits are: 0 str - 2.99, 1 str - 4.74, 2 str - 6.3, 3 str - 7.75

Lab/Cor, Inc.
7619 6th Ave Nw
Seattle, WA 98117

Final Report

Phone: (206) 781-0155
Fax: (206) 789-8424
http://www.labcor.net

A Professional Service Corporation in the Northwest

ISO 10312, Direct Summary Data

Job Number: 070434 **SEA**
Client: Idaho National Laboratory
Project Name: RARE

Report Number: 070434R06
Date Received: 4/23/2007

Lab/Cor Sample No.: S29

Client Sample No.: FB-2-R4
Description:

Analyst(s)	Analysis Date
KM	6/4/2007

Volume (L) : 0
Lab Filter Area (mm2) : 385
Grid Openings Analyzed : 35
Average Grid Opening Area : 0.009
Area Analyzed (mm2) : 0.315
Analytical Sens. (struc/cc) : NA
Dectection Limit. (struc/cc) : NA

Structure Type	Filter Density (s/mm2)	Concen-tration* (struc/cc)	95% Confidence Interval (struc/cc)	Structure Count[1] Prim	Total
Primary Asbestos Structures	619	Not Applicable	Not Applicable	195	
Total Asbestos Structures	647.6	Not Applicable	Not Applicable		204
PCM Equivalent Fibers-ISO	323.8	Not Applicable	Not Applicable		102
PCM Equivalent Fibers-NIOSH	342.9	Not Applicable	Not Applicable		108
PCM Equivalent Structures-ISO	288.9	Not Applicable	Not Applicable	91	
PCM Equivalent Structures-NIOSH	307.9	Not Applicable	Not Applicable	97	
Asbestos Structures >5um and 3:1	292.1	Not Applicable	Not Applicable	92	
Asbestos Fibers and Bundles > 5um and 3:1	285.7	Not Applicable	Not Applicable		90

[1] Concentration and 95% Confidence Level are calculated based upon the number showing under the Structure Count header.

Lab/Cor Sample No.: S30

Client Sample No.: FB-2-R5
Description:

Analyst(s)	Analysis Date
KM	6/5/2007

Volume (L) : 0
Lab Filter Area (mm2) : 385
Grid Openings Analyzed : 35
Average Grid Opening Area : 0.009
Area Analyzed (mm2) : 0.315
Analytical Sens. (struc/cc) : NA
Dectection Limit. (struc/cc) : NA

Structure Type	Filter Density (s/mm2)	Concen-tration* (struc/cc)	95% Confidence Interval (struc/cc)	Structure Count[1] Prim	Total
Primary Asbestos Structures	504.8	Not Applicable	Not Applicable	159	
Total Asbestos Structures	511.1	Not Applicable	Not Applicable		161
PCM Equivalent Fibers-ISO	228.6	Not Applicable	Not Applicable		72
PCM Equivalent Fibers-NIOSH	225.4	Not Applicable	Not Applicable		71
PCM Equivalent Structures-ISO	215.9	Not Applicable	Not Applicable	68	
PCM Equivalent Structures-NIOSH	212.7	Not Applicable	Not Applicable	67	
Asbestos Structures >5um and 3:1	209.5	Not Applicable	Not Applicable	66	
Asbestos Fibers and Bundles > 5um and 3:1	209.5	Not Applicable	Not Applicable		66

[1] Concentration and 95% Confidence Level are calculated based upon the number showing under the Structure Count header.

* One-sided upper 95% Poisson confidence limits may be used to calculate sample concentrations ([Struc count] * [Analytical Sensitivity]) when the structure count is below 4. The limits are: 0 str - 2.99, 1 str - 4.74, 2 str - 6.3, 3 str - 7.75

Lab/Cor, Inc.
7619 6th Ave Nw
Seattle, WA 98117

Final Report

Phone: (206) 781-0155
Fax: (206) 789-8424
http://www.labcor.net

A Professional Service Corporation in the Northwest

ISO 10312, Direct Summary Data

Job Number: 070434 **SEA**
Client: Idaho National Laboratory
Project Name: RARE

Report Number: 070434R06
Date Received: 4/23/2007

Lab/Cor Sample No.: S31

Client Sample No.: FB-2-R6
Description:

Analyst(s)	Analysis Date
KM	6/5/2007
KM	6/6/2007

Volume (L) : 0
Lab Filter Area (mm2) : 385
Grid Openings Analyzed : 10
Average Grid Opening Area : 0.009
Area Analyzed (mm2) : 0.09
Analytical Sens. (struc/cc) : NA
Dectection Limit. (struc/cc) : NA

Structure Type	Filter Density (s/mm2)	Concen-tration* (struc/cc)	95% Confidence Interval (struc/cc)	Structure Count[1] Prim	Total
Primary Asbestos Structures	500	Not Applicable	Not Applicable	45	
Total Asbestos Structures	500	Not Applicable	Not Applicable		45
PCM Equivalent Fibers-ISO	177.8	Not Applicable	Not Applicable		16
PCM Equivalent Fibers-NIOSH	177.8	Not Applicable	Not Applicable		16
PCM Equivalent Structures-ISO	155.6	Not Applicable	Not Applicable	14	
PCM Equivalent Structures-NIOSH	155.6	Not Applicable	Not Applicable	14	
Asbestos Structures >5um and 3:1	166.7	Not Applicable	Not Applicable	15	
Asbestos Fibers and Bundles > 5um and 3:1	155.6	Not Applicable	Not Applicable		14

[1] Concentration and 95% Confidence Level are calculated based upon the number showing under the Structure Count header.

Lab/Cor Sample No.: S32

Client Sample No.: FB-2-R7
Description:

Analyst(s)	Analysis Date
KM	6/6/2007

Volume (L) : 0
Lab Filter Area (mm2) : 385
Grid Openings Analyzed : 10
Average Grid Opening Area : 0.009
Area Analyzed (mm2) : 0.09
Analytical Sens. (struc/cc) : NA
Dectection Limit. (struc/cc) : NA

Structure Type	Filter Density (s/mm2)	Concen-tration* (struc/cc)	95% Confidence Interval (struc/cc)	Structure Count[1] Prim	Total
Primary Asbestos Structures	755.6	Not Applicable	Not Applicable	68	
Total Asbestos Structures	755.6	Not Applicable	Not Applicable		68
PCM Equivalent Fibers-ISO	422.2	Not Applicable	Not Applicable		38
PCM Equivalent Fibers-NIOSH	422.2	Not Applicable	Not Applicable		38
PCM Equivalent Structures-ISO	388.9	Not Applicable	Not Applicable	35	
PCM Equivalent Structures-NIOSH	388.9	Not Applicable	Not Applicable	35	
Asbestos Structures >5um and 3:1	433.3	Not Applicable	Not Applicable	39	
Asbestos Fibers and Bundles > 5um and 3:1	411.1	Not Applicable	Not Applicable		37

[1] Concentration and 95% Confidence Level are calculated based upon the number showing under the Structure Count header.

* One-sided upper 95% Poisson confidence limits may be used to calculate sample concentrations ([Struc count] * [Analytical Sensitivity]) when the structure count is below 4. The limits are: 0 str - 2.99, 1 str - 4.74, 2 str - 6.3, 3 str - 7.75

Lab/Cor, Inc.
7619 6th Ave Nw
Seattle, WA 98117

Final Report

Phone: (206) 781-0155
Fax: (206) 789-8424
http://www.labcor.net

A Professional Service Corporation in the Northwest

ISO 10312, Direct Summary Data

Job Number: 070434 **SEA**
Client: Idaho National Laboratory
Project Name: RARE

Report Number: 070434R06
Date Received: 4/23/2007

Lab/Cor Sample No.: S33

Client Sample No.: FB-1-R1
Description:

Analyst(s)	Analysis Date
KM	6/6/2007

Volume (L) : 0
Lab Filter Area (mm2) : 385
Grid Openings Analyzed : 10
Average Grid Opening Area : 0.009
Area Analyzed (mm2) : 0.09
Analytical Sens. (struc/cc) : NA
Dectection Limit. (struc/cc) : NA

Structure Type	Filter Density (s/mm2)	Concen-tration* (struc/cc)	95% Confidence Interval (struc/cc)	Structure Count[1] Prim	Total
Primary Asbestos Structures	311.1	Not Applicable	Not Applicable	28	
Total Asbestos Structures	344.4	Not Applicable	Not Applicable		31
PCM Equivalent Fibers-ISO	222.2	Not Applicable	Not Applicable		20
PCM Equivalent Fibers-NIOSH	222.2	Not Applicable	Not Applicable		20
PCM Equivalent Structures-ISO	188.9	Not Applicable	Not Applicable	17	
PCM Equivalent Structures-NIOSH	211.1	Not Applicable	Not Applicable	19	
Asbestos Structures >5um and 3:1	222.2	Not Applicable	Not Applicable	20	
Asbestos Fibers and Bundles > 5um and 3:1	211.1	Not Applicable	Not Applicable		19

[1] Concentration and 95% Confidence Level are calculated based upon the number showing under the Structure Count header.

Lab/Cor Sample No.: S34

Client Sample No.: FB-1-R2
Description:

Analyst(s)	Analysis Date
KM	6/6/2007

Volume (L) : 0
Lab Filter Area (mm2) : 385
Grid Openings Analyzed : 35
Average Grid Opening Area : 0.009
Area Analyzed (mm2) : 0.315
Analytical Sens. (struc/cc) : NA
Dectection Limit. (struc/cc) : NA

Structure Type	Filter Density (s/mm2)	Concen-tration* (struc/cc)	95% Confidence Interval (struc/cc)	Structure Count[1] Prim	Total
Primary Asbestos Structures	0	Not Applicable	Not Applicable	0	
Total Asbestos Structures	0	Not Applicable	Not Applicable		0
PCM Equivalent Fibers-ISO	0	Not Applicable	Not Applicable		0
PCM Equivalent Fibers-NIOSH	0	Not Applicable	Not Applicable		0
PCM Equivalent Structures-ISO	0	Not Applicable	Not Applicable	0	
PCM Equivalent Structures-NIOSH	0	Not Applicable	Not Applicable	0	
Asbestos Structures >5um and 3:1	0	Not Applicable	Not Applicable	0	
Asbestos Fibers and Bundles > 5um and 3:1	0	Not Applicable	Not Applicable		0

[1] Concentration and 95% Confidence Level are calculated based upon the number showing under the Structure Count header.

* One-sided upper 95% Poisson confidence limits may be used to calculate sample concentrations ([Struc count] * [Analytical Sensitivity]) when the structure count is below 4. The limits are: 0 str - 2.99, 1 str - 4.74, 2 str - 6.3, 3 str - 7.75

Lab/Cor, Inc.
7619 6th Ave Nw
Seattle, WA 98117

Final Report

Phone: (206) 781-0155
Fax: (206) 789-8424
http://www.labcor.net

A Professional Service Corporation in the Northwest

ISO 10312, Direct Summary Data

Job Number: 070434 **SEA**
Client: Idaho National Laboratory
Project Name: RARE

Report Number: 070434R06
Date Received: 4/23/2007

Lab/Cor Sample No.: S35

Client Sample No.: FB-1-R3
Description:

Analyst(s)	Analysis Date
KM	6/6/2007

Volume (L) : 0
Lab Filter Area (mm2) : 385
Grid Openings Analyzed : 10
Average Grid Opening Area : 0.009
Area Analyzed (mm2) : 0.09
Analytical Sens. (struc/cc) : NA
Dectection Limit. (struc/cc) : NA

Structure Type	Filter Density (s/mm2)	Concen-tration* (struc/cc)	95% Confidence Interval (struc/cc)	Structure Count[1] Prim/Total	
Primary Asbestos Structures	355.6	Not Applicable	Not Applicable	32	
Total Asbestos Structures	355.6	Not Applicable	Not Applicable		32
PCM Equivalent Fibers-ISO	211.1	Not Applicable	Not Applicable		19
PCM Equivalent Fibers-NIOSH	222.2	Not Applicable	Not Applicable		20
PCM Equivalent Structures-ISO	211.1	Not Applicable	Not Applicable	19	
PCM Equivalent Structures-NIOSH	222.2	Not Applicable	Not Applicable	20	
Asbestos Structures >5um and 3:1	200	Not Applicable	Not Applicable	18	
Asbestos Fibers and Bundles > 5um and 3:1	200	Not Applicable	Not Applicable		18

[1] Concentration and 95% Confidence Level are calculated based upon the number showing under the Structure Count header.

Lab/Cor Sample No.: S36

Client Sample No.: FB-1-R4
Description:

Analyst(s)	Analysis Date
KM	6/6/2007
KM	6/7/2007

Volume (L) : 0
Lab Filter Area (mm2) : 385
Grid Openings Analyzed : 10
Average Grid Opening Area : 0.009
Area Analyzed (mm2) : 0.09
Analytical Sens. (struc/cc) : NA
Dectection Limit. (struc/cc) : NA

Structure Type	Filter Density (s/mm2)	Concen-tration* (struc/cc)	95% Confidence Interval (struc/cc)	Structure Count[1] Prim/Total	
Primary Asbestos Structures	366.7	Not Applicable	Not Applicable	33	
Total Asbestos Structures	366.7	Not Applicable	Not Applicable		33
PCM Equivalent Fibers-ISO	166.7	Not Applicable	Not Applicable		15
PCM Equivalent Fibers-NIOSH	188.9	Not Applicable	Not Applicable		17
PCM Equivalent Structures-ISO	133.3	Not Applicable	Not Applicable	12	
PCM Equivalent Structures-NIOSH	166.7	Not Applicable	Not Applicable	15	
Asbestos Structures >5um and 3:1	166.7	Not Applicable	Not Applicable	15	
Asbestos Fibers and Bundles > 5um and 3:1	166.7	Not Applicable	Not Applicable		15

[1] Concentration and 95% Confidence Level are calculated based upon the number showing under the Structure Count header.

* One-sided upper 95% Poisson confidence limits may be used to calculate sample concentrations ([Struc count] * [Analytical Sensitivity]) when the structure count is below 4. The limits are: 0 str - 2.99, 1 str - 4.74, 2 str - 6.3, 3 str - 7.75

Lab/Cor, Inc.
7619 6th Ave Nw
Seattle, WA 98117

Final Report

Phone: (206) 781-0155
Fax: (206) 789-8424
http://www.labcor.net

A Professional Service Corporation in the Northwest

ISO 10312, Direct Summary Data

Job Number: 070434 **SEA**
Client: Idaho National Laboratory
Project Name: RARE

Report Number: 070434R06
Date Received: 4/23/2007

Lab/Cor Sample No.: S37

Client Sample No.: FB-1-R5
Description:

Analyst(s)	Analysis Date
KM	6/7/2007

Volume (L) : 0
Lab Filter Area (mm2) : 385
Grid Openings Analyzed : 10
Average Grid Opening Area : 0.009
Area Analyzed (mm2) : 0.09
Analytical Sens. (struc/cc) : NA
Dectection Limit. (struc/cc) : NA

Structure Type	Filter Density (s/mm2)	Concen-tration* (struc/cc)	95% Confidence Interval (struc/cc)	Structure Count[1] Prim	Total
Primary Asbestos Structures	288.9	Not Applicable	Not Applicable	26	
Total Asbestos Structures	288.9	Not Applicable	Not Applicable		26
PCM Equivalent Fibers-ISO	144.4	Not Applicable	Not Applicable		13
PCM Equivalent Fibers-NIOSH	144.4	Not Applicable	Not Applicable		13
PCM Equivalent Structures-ISO	122.2	Not Applicable	Not Applicable	11	
PCM Equivalent Structures-NIOSH	133.3	Not Applicable	Not Applicable	12	
Asbestos Structures >5um and 3:1	144.4	Not Applicable	Not Applicable	13	
Asbestos Fibers and Bundles > 5um and 3:1	144.4	Not Applicable	Not Applicable		13

[1] Concentration and 95% Confidence Level are calculated based upon the number showing under the Structure Count header.

Lab/Cor Sample No.: S38

Client Sample No.: FB-1-R6
Description:

Analyst(s)	Analysis Date
KM	6/7/2007

Volume (L) : 0
Lab Filter Area (mm2) : 385
Grid Openings Analyzed : 10
Average Grid Opening Area : 0.009
Area Analyzed (mm2) : 0.09
Analytical Sens. (struc/cc) : NA
Dectection Limit. (struc/cc) : NA

Structure Type	Filter Density (s/mm2)	Concen-tration* (struc/cc)	95% Confidence Interval (struc/cc)	Structure Count[1] Prim	Total
Primary Asbestos Structures	277.8	Not Applicable	Not Applicable	25	
Total Asbestos Structures	277.8	Not Applicable	Not Applicable		25
PCM Equivalent Fibers-ISO	166.7	Not Applicable	Not Applicable		15
PCM Equivalent Fibers-NIOSH	166.7	Not Applicable	Not Applicable		15
PCM Equivalent Structures-ISO	177.8	Not Applicable	Not Applicable	16	
PCM Equivalent Structures-NIOSH	177.8	Not Applicable	Not Applicable	16	
Asbestos Structures >5um and 3:1	177.8	Not Applicable	Not Applicable	16	
Asbestos Fibers and Bundles > 5um and 3:1	155.6	Not Applicable	Not Applicable		14

[1] Concentration and 95% Confidence Level are calculated based upon the number showing under the Structure Count header.

* One-sided upper 95% Poisson confidence limits may be used to calculate sample concentrations ([Struc count] * [Analytical Sensitivity]) when the structure count is below 4. The limits are: 0 str - 2.99, 1 str - 4.74, 2 str - 6.3, 3 str - 7.75

Lab/Cor, Inc.
7619 6th Ave Nw
Seattle, WA 98117

Final Report

Phone: (206) 781-0155
Fax: (206) 789-8424
http://www.labcor.net

A Professional Service Corporation in the Northwest

ISO 10312, Direct Summary Data

Job Number: 070434 **SEA**
Client: Idaho National Laboratory
Project Name: RARE

Report Number: 070434R06
Date Received: 4/23/2007

Lab/Cor Sample No.: S39
Client Sample No.: FB-1-R7
Description:

Analyst(s)	Analysis Date
KM	6/7/2007

Volume (L) : 0
Lab Filter Area (mm2) : 385
Grid Openings Analyzed : 10
Average Grid Opening Area : 0.009
Area Analyzed (mm2) : 0.09
Analytical Sens. (struc/cc) : NA
Dectection Limit. (struc/cc) : NA

Structure Type	Filter Density (s/mm2)	Concen-tration* (struc/cc)	95% Confidence Interval (struc/cc)	Structure Count[1] Prim/Total	
Primary Asbestos Structures	288.9	Not Applicable	Not Applicable	26	
Total Asbestos Structures	300	Not Applicable	Not Applicable		27
PCM Equivalent Fibers-ISO	166.7	Not Applicable	Not Applicable		15
PCM Equivalent Fibers-NIOSH	166.7	Not Applicable	Not Applicable		15
PCM Equivalent Structures-ISO	144.4	Not Applicable	Not Applicable	13	
PCM Equivalent Structures-NIOSH	144.4	Not Applicable	Not Applicable	13	
Asbestos Structures >5um and 3:1	144.4	Not Applicable	Not Applicable	13	
Asbestos Fibers and Bundles > 5um and 3:1	133.3	Not Applicable	Not Applicable		12

[1] Concentration and 95% Confidence Level are calculated based upon the number showing under the Structure Count header.

Reviewed by:

John Harris, M.P.H.
Laboratory Director

* One-sided upper 95% Poisson confidence limits may be used to calculate sample concentrations ([Struc count] * [Analytical Sensitivity]) when the structure count is below 4. The limits are: 0 str - 2.99, 1 str - 4.74, 2 str - 6.3, 3 str - 7.75

Lab/Cor, Inc.
7619 6th Ave Nw
Seattle, WA 98117

Final Report

Phone: (206) 781-0155
Fax: (206) 789-8424
http://www.labcor.net

A Professional Service Corporation in the Northwest

ISO 10312, Direct Raw Data

Job Number: 070434 **SEA**
Client: Idaho National Laboratory
Project Name: RARE

Report Number: 070434R06
Date Received: 4/23/2007

Client Sample No: **cleaning blank #1** Lab/Cor Sample No: **S1**
Client Description: **Date Sampled: 4/16/2007**

Gr	No.	Loc.	ID	Prim	Tot	Class	Len	Wid	Asp	Analyte	Elements	Comment	Count Categories
G1	1	A2				NSD							
G1	2	C2				NSD							
G1	3	E2				NSD							
G1	4	G2				NSD							
G1	5	I2				NSD							
G1	6	J4				NSD							
G1	7	H4				NSD							
G1	8	F4				NSD							
G1	9	D4				NSD							
G1	10	B4				NSD							
G1	11	A7				NSD							
G1	12	C7				NSD							
G1	13	E7				NSD							
G1	14	G7				NSD							
G1	15	I7				NSD							
G1	16	J9				NSD							
G1	17	H9				NSD							
G1	18	F9				NSD							
G1	19	D9				NSD							
G1	20	B9				NSD							
G2	21	A2				NSD							
G2	22	C2				NSD							
G2	23	E2				NSD							
G2	24	G2				NSD							
G2	25	I2				NSD							
G2	26	J4				NSD							
G2	27	H4				NSD							
G2	28	F4				NSD							
G2	29	D4				NSD							
G2	30	B4				NSD							
G2	31	A7				NSD							
G2	32	C7				NSD							
G2	33	E7				NSD							
G2	34	G7				NSD							

Count Categories

AFB>5, 3:1	Asbestos Fibers and Bundles > 5um and 3:1	AS>5, 3:1	Asbestos Structures >5um and 3:1
PAS	Primary Asbestos Structures	PCMEF-ISO	PCM Equivalent Fibers-ISO
PCMEF-US	PCM Equivalent Fibers-NIOSH	PCMES-ISO	PCM Equivalent Structures-ISO
PCMES-US	PCM Equivalent Structures-NIOSH	TAS	Total Asbestos Structures

Lab/Cor, Inc.
7619 6th Ave Nw
Seattle, WA 98117

Final Report

Phone: (206) 781-0155
Fax: (206) 789-8424
http://www.labcor.net

A Professional Service Corporation in the Northwest

ISO 10312, Direct Raw Data

Job Number: 070434 **SEA**
Client: Idaho National Laboratory
Project Name: RARE

Report Number: 070434R06
Date Received: 4/23/2007

Client Sample No: **cleaning blank #1** Lab/Cor Sample No: **S1**
Client Description: **Date Sampled: 4/16/2007**

Gr	No.	Loc.	ID	Prim	Tot	Class	Len	Wid	Asp	Analyte	Elements	Comment	Count Categories
G2	35	I7				NSD							

Count Categories

AFB>5, 3:1	Asbestos Fibers and Bundles > 5um and 3:1	AS>5, 3:1	Asbestos Structures >5um and 3:1
PAS	Primary Asbestos Structures	PCMEF-ISO	PCM Equivalent Fibers-ISO
PCMEF-US	PCM Equivalent Fibers-NIOSH	PCMES-ISO	PCM Equivalent Structures-ISO
PCMES-US	PCM Equivalent Structures-NIOSH	TAS	Total Asbestos Structures

Lab/Cor, Inc.
7619 6th Ave Nw
Seattle, WA 98117

Final Report

Phone: (206) 781-0155
Fax: (206) 789-8424
http://www.labcor.net

A Professional Service Corporation in the Northwest

ISO 10312, Direct Raw Data

Job Number: 070434 **SEA**
Client: Idaho National Laboratory
Project Name: RARE

Report Number: 070434R06
Date Received: 4/23/2007

Client Sample No: **cleaning blank #2** Lab/Cor Sample No: **S2**
Client Description: **Date Sampled: 4/16/2007**

Gr	No.	Loc.	ID	Prim	Tot	Class	Len	Wid	Asp	Analyte	Elements	Comment	Count Categories
G1	1	A2				NSD							
G1	2	C2				NSD							
G1	3	E2				NSD							
G1	4	G2				NSD							
G1	5	I2				NSD							
G1	6	J4				NSD							
G1	7	H4				NSD							
G1	8	F4				NSD							
G1	9	D4				NSD							
G1	10	B4				NSD							
G1	11	A7				NSD							
G1	12	C7				NSD							
G1	13	E7				NSD							
G1	14	G7				NSD							
G1	15	I7				NSD							
G1	16	H9				NSD							
G1	17	F9				NSD							
G1	18	D9				NSD							
G1	19	B9				NSD							
G2	20	A2				NSD							
G2	21	C2				NSD							
G2	22	E2				NSD							
G2	23	G2				NSD							
G2	24	I2				NSD							
G2	25	J4				NSD							
G2	26	H4				NSD							
G2	27	F4				NSD							
G2	28	D4				NSD							
G2	29	B4				NSD							
G2	30	A7				NSD							
G2	31	C7				NSD							
G2	32	E7				NSD							
G2	33	G7				NSD							
G2	34	I7				NSD							

Count Categories

AFB>5, 3:1	Asbestos Fibers and Bundles > 5um and 3:1	AS>5, 3:1	Asbestos Structures >5um and 3:1
PAS	Primary Asbestos Structures	PCMEF-ISO	PCM Equivalent Fibers-ISO
PCMEF-US	PCM Equivalent Fibers-NIOSH	PCMES-ISO	PCM Equivalent Structures-ISO
PCMES-US	PCM Equivalent Structures-NIOSH	TAS	Total Asbestos Structures

Lab/Cor, Inc.
7619 6th Ave Nw
Seattle, WA 98117

Final Report

Phone: (206) 781-0155
Fax: (206) 789-8424
http://www.labcor.net

A Professional Service Corporation in the Northwest

ISO 10312, Direct Raw Data

Job Number: 070434 **SEA**
Client: Idaho National Laboratory
Project Name: RARE

Report Number: 070434R06
Date Received: 4/23/2007

Client Sample No: **cleaning blank #2** Lab/Cor Sample No: **S2**
Client Description: **Date Sampled: 4/16/2007**

Gr	No.	Loc.	ID	Prim	Tot	Class	Len	Wid	Asp	Analyte	Elements	Comment	Count Categories
G2	35	H9				NSD							

Count Categories

AFB>5, 3:1	Asbestos Fibers and Bundles > 5um and 3:1	AS>5, 3:1	Asbestos Structures >5um and 3:1
PAS	Primary Asbestos Structures	PCMEF-ISO	PCM Equivalent Fibers-ISO
PCMEF-US	PCM Equivalent Fibers-NIOSH	PCMES-ISO	PCM Equivalent Structures-ISO
PCMES-US	PCM Equivalent Structures-NIOSH	TAS	Total Asbestos Structures

Lab/Cor, Inc.
7619 6th Ave Nw
Seattle, WA 98117

Final Report

Phone: (206) 781-0155
Fax: (206) 789-8424
http://www.labcor.net

A Professional Service Corporation in the Northwest

ISO 10312, Direct Raw Data

Job Number: 070434 **SEA**
Client: Idaho National Laboratory
Project Name: RARE

Report Number: 070434R06
Date Received: 4/23/2007

Client Sample No: **cleaning blank #3** Lab/Cor Sample No: **S3**
Client Description: **Date Sampled: 4/16/2007**

Gr	No.	Loc.	ID	Prim	Tot	Class	Len	Wid	Asp	Analyte	Elements	Comment	Count Categories
G1	1	A2				NSD							
G1	2	C2	AZQ	1	1	F	7.7	1.5	5.1	Tremolite	MG,AL,SI, CA,FE		AS>5, 3:1, AFB>5, 3:1, PCMES-US, PCMEF-US, PCMEF-ISO, PCMES-ISO

ItemType	ItemNum	Confirmed	Comment
Brightfield	J3382 BF		
Diffraction	J3382	KM 5/1/2007	ZONE AXIS [5 1 4]
Spectra	J2830		

G1	3	E2				NSD							
G1	4	G2				NSD							
G1	5	I2				NSD							
G1	6	J4				NSD							
G1	7	H4				NSD							
G1	8	F4				NSD							
G1	9	D4				NSD							
G1	10	B4				NSD							
G1	11	A7				NSD							
G1	12	C7				NSD							
G1	13	E7				NSD							
G1	14	G7				NSD							
G1	15	I7				NSD							
G1	16	J9				NSD							
G1	17	H9				NSD							
G1	18	F9				NSD							
G1	19	D9				NSD							
G1	20	B9				NSD							
G2	21	A2				NSD							
G2	22	C2				NSD							
G2	23	E2				NSD							
G2	24	G2				NSD							
G2	25	I2				NSD							
G2	26	J4				NSD							
G2	27	H4				NSD							
G2	28	F4				NSD							
G2	29	D4				NSD							

Count Categories

AFB>5, 3:1	Asbestos Fibers and Bundles > 5um and 3:1	AS>5, 3:1	Asbestos Structures >5um and 3:1
PAS	Primary Asbestos Structures	PCMEF-ISO	PCM Equivalent Fibers-ISO
PCMEF-US	PCM Equivalent Fibers-NIOSH	PCMES-ISO	PCM Equivalent Structures-ISO
PCMES-US	PCM Equivalent Structures-NIOSH	TAS	Total Asbestos Structures

Lab/Cor, Inc.
7619 6th Ave Nw
Seattle, WA 98117

Final Report

Phone: (206) 781-0155
Fax: (206) 789-8424
http://www.labcor.net

A Professional Service Corporation in the Northwest

ISO 10312, Direct Raw Data

Job Number: 070434 **SEA**
Client: Idaho National Laboratory
Project Name: RARE

Report Number: 070434R06
Date Received: 4/23/2007

Client Sample No: **cleaning blank #3** Lab/Cor Sample No: **S3**
Client Description: **Date Sampled: 4/16/2007**

Gr	No.	Loc.	ID	Prim	Tot	Class	Len	Wid	Asp	Analyte	Elements	Comment	Count Categories
G2	30	B4				NSD							
G2	31	A7				NSD							
G2	32	C7				NSD							
G2	33	E7				NSD							
G2	34	G7				NSD							
G2	35	I7				NSD							

Count Categories

AFB>5, 3:1	Asbestos Fibers and Bundles > 5um and 3:1	AS>5, 3:1	Asbestos Structures >5um and 3:1
PAS	Primary Asbestos Structures	PCMEF-ISO	PCM Equivalent Fibers-ISO
PCMEF-US	PCM Equivalent Fibers-NIOSH	PCMES-ISO	PCM Equivalent Structures-ISO
PCMES-US	PCM Equivalent Structures-NIOSH	TAS	Total Asbestos Structures

Lab/Cor, Inc.
7619 6th Ave Nw
Seattle, WA 98117

Final Report

Phone: (206) 781-0155
Fax: (206) 789-8424
http://www.labcor.net

A Professional Service Corporation in the Northwest

ISO 10312, Direct Raw Data

Job Number: 070434 **SEA**
Client: Idaho National Laboratory
Project Name: RARE

Report Number: 070434R06
Date Received: 4/23/2007

Client Sample No: **cleaning blank #4** Lab/Cor Sample No: **S4**
Client Description: **Date Sampled: 4/16/2007**

Gr	No.	Loc.	ID	Prim	Tot	Class	Len	Wid	Asp	Analyte	Elements	Comment	Count Categories
G1	1	A2				NSD							
G1	2	C2				NSD							
G1	3	E2				NSD							
G1	4	G2				NSD							
G1	5	I2				NSD							
G1	6	J4				NSD							
G1	7	H4				NSD							
G1	8	F4				NSD							
G1	9	D4				NSD							
G1	10	B4				NSD							
G1	11	A7				NSD							
G1	12	C7				NSD							
G1	13	E7				NSD							
G1	14	G7				NSD							
G1	15	I7				NSD							
G1	16	J9				NSD							
G1	17	H9				NSD							
G1	18	F9				NSD							
G1	19	D9				NSD							
G1	20	B9				NSD							
G2	21	A2				NSD							
G2	22	C2				NSD							
G2	23	E2				NSD							
G2	24	G2				NSD							
G2	25	I2				NSD							
G2	26	J4				NSD							
G2	27	H4				NSD							
G2	28	F4				NSD							
G2	29	D4				NSD							
G2	30	B4				NSD							
G2	31	A7				NSD							
G2	32	C7				NSD							
G2	33	E7				NSD							
G2	34	G7				NSD							

Count Categories

AFB>5, 3:1	Asbestos Fibers and Bundles > 5um and 3:1	AS>5, 3:1	Asbestos Structures >5um and 3:1
PAS	Primary Asbestos Structures	PCMEF-ISO	PCM Equivalent Fibers-ISO
PCMEF-US	PCM Equivalent Fibers-NIOSH	PCMES-ISO	PCM Equivalent Structures-ISO
PCMES-US	PCM Equivalent Structures-NIOSH	TAS	Total Asbestos Structures

Lab/Cor, Inc.
7619 6th Ave Nw
Seattle, WA 98117

Final Report

Phone: (206) 781-0155
Fax: (206) 789-8424
http://www.labcor.net

A Professional Service Corporation in the Northwest

ISO 10312, Direct Raw Data

Job Number: 070434 **SEA**
Client: Idaho National Laboratory
Project Name: RARE

Report Number: 070434R06
Date Received: 4/23/2007

Client Sample No: **cleaning blank #4** Lab/Cor Sample No: **S4**
Client Description: **Date Sampled: 4/16/2007**

Gr	No.	Loc.	ID	Prim	Tot	Class	Len	Wid	Asp	Analyte	Elements	Comment	Count Categories
G2	35	I7				NSD							

Count Categories

AFB>5, 3:1	Asbestos Fibers and Bundles > 5um and 3:1	AS>5, 3:1	Asbestos Structures >5um and 3:1
PAS	Primary Asbestos Structures	PCMEF-ISO	PCM Equivalent Fibers-ISO
PCMEF-US	PCM Equivalent Fibers-NIOSH	PCMES-ISO	PCM Equivalent Structures-ISO
PCMES-US	PCM Equivalent Structures-NIOSH	TAS	Total Asbestos Structures

Lab/Cor, Inc.
7619 6th Ave Nw
Seattle, WA 98117

Final Report

Phone: (206) 781-0155
Fax: (206) 789-8424
http://www.labcor.net

A Professional Service Corporation in the Northwest

ISO 10312, Direct Raw Data

Job Number: 070434 **SEA**
Client: Idaho National Laboratory
Project Name: RARE

Report Number: 070434R06
Date Received: 4/23/2007

Client Sample No: **Lab blank #1** Lab/Cor Sample No: **S5**
Client Description: **Date Sampled: 4/16/2007**

Gr	No.	Loc.	ID	Prim	Tot	Class	Len	Wid	Asp	Analyte	Elements	Comment	Count Categories
G1	1	A2				NSD							
G1	2	C2				NSD							
G1	3	E2				NSD							
G1	4	G2				NSD							
G1	5	I2				NSD							
G1	6	J4				NSD							
G1	7	H4				NSD							
G1	8	F4				NSD							
G1	9	D4				NSD							
G1	10	B4				NSD							
G1	11	B7				NSD							
G1	12	C7				NSD							
G1	13	E7				NSD							
G1	14	G7				NSD							
G1	15	I7				NSD							
G1	16	J8				NSD							
G1	17	H8				NSD							
G1	18	F8				NSD							
G1	19	D8				NSD							
G1	20	B8				NSD							
G2	21	A2				NSD							
G2	22	C2				NSD							
G2	23	E2				NSD							
G2	24	G2				NSD							
G2	25	I2				NSD							
G2	26	J4				NSD							
G2	27	H4				NSD							
G2	28	F4				NSD							
G2	29	D4				NSD							
G2	30	B4				NSD							
G2	31	A7				NSD							
G2	32	C7				NSD							
G2	33	E7				NSD							
G2	34	G7				NSD							

Count Categories

AFB>5, 3:1	Asbestos Fibers and Bundles > 5um and 3:1	AS>5, 3:1	Asbestos Structures >5um and 3:1
PAS	Primary Asbestos Structures	PCMEF-ISO	PCM Equivalent Fibers-ISO
PCMEF-US	PCM Equivalent Fibers-NIOSH	PCMES-ISO	PCM Equivalent Structures-ISO
PCMES-US	PCM Equivalent Structures-NIOSH	TAS	Total Asbestos Structures

Lab/Cor, Inc.
7619 6th Ave Nw
Seattle, WA 98117

Final Report

Phone: (206) 781-0155
Fax: (206) 789-8424
http://www.labcor.net

A Professional Service Corporation in the Northwest

ISO 10312, Direct Raw Data

Job Number: 070434 **SEA**
Client: Idaho National Laboratory
Project Name: RARE

Report Number: 070434R06
Date Received: 4/23/2007

Client Sample No: **Lab blank #1** Lab/Cor Sample No: **S5**
Client Description: **Date Sampled: 4/16/2007**

Gr	No.	Loc.	ID	Prim	Tot	Class	Len	Wid	Asp	Analyte	Elements	Comment	Count Categories
G2	35	I7				NSD							

Count Categories

AFB>5, 3:1	Asbestos Fibers and Bundles > 5um and 3:1	AS>5, 3:1	Asbestos Structures >5um and 3:1
PAS	Primary Asbestos Structures	PCMEF-ISO	PCM Equivalent Fibers-ISO
PCMEF-US	PCM Equivalent Fibers-NIOSH	PCMES-ISO	PCM Equivalent Structures-ISO
PCMES-US	PCM Equivalent Structures-NIOSH	TAS	Total Asbestos Structures

Lab/Cor, Inc.
7619 6th Ave Nw
Seattle, WA 98117

Final Report

Phone: (206) 781-0155
Fax: (206) 789-8424
http://www.labcor.net

A Professional Service Corporation in the Northwest

ISO 10312, Direct Raw Data

Job Number: 070434 **SEA**
Client: Idaho National Laboratory
Project Name: RARE

Report Number: 070434R06
Date Received: 4/23/2007

Client Sample No: **Lab blank #2** Lab/Cor Sample No: **S6**
Client Description: **Date Sampled: 4/16/2007**

Gr	No.	Loc.	ID	Prim	Tot	Class	Len	Wid	Asp	Analyte	Elements	Comment	Count Categories
G1	1	A2				NSD							
G1	2	C2				NSD							
G1	3	E2				NSD							
G1	4	G2				NSD							
G1	5	I2				NSD							
G1	6	J4				NSD							
G1	7	H4				NSD							
G1	8	F4				NSD							
G1	9	D4				NSD							
G1	10	B4				NSD							
G1	11	A7				NSD							
G1	12	C7				NSD							
G1	13	E7				NSD							
G1	14	G7				NSD							
G1	15	I7				NSD							
G1	16	J9				NSD							
G1	17	H9				NSD							
G1	18	F9				NSD							
G1	19	D9				NSD							
G1	20	B9				NSD							
G2	21	A2				NSD							
G2	22	C2				NSD							
G2	23	E2				NSD							
G2	24	G2				NSD							
G2	25	I2				NSD							
G2	26	J4				NSD							
G2	27	H4				NSD							
G2	28	F4				NSD							
G2	29	D4				NSD							
G2	30	B4				NSD							
G2	31	A7				NSD							
G2	32	C7				NSD							
G2	33	E7				NSD							
G2	34	G7				NSD							

Count Categories

AFB>5, 3:1	Asbestos Fibers and Bundles > 5um and 3:1	AS>5, 3:1	Asbestos Structures >5um and 3:1
PAS	Primary Asbestos Structures	PCMEF-ISO	PCM Equivalent Fibers-ISO
PCMEF-US	PCM Equivalent Fibers-NIOSH	PCMES-ISO	PCM Equivalent Structures-ISO
PCMES-US	PCM Equivalent Structures-NIOSH	TAS	Total Asbestos Structures

Lab/Cor, Inc.
7619 6th Ave Nw
Seattle, WA 98117

Final Report

Phone: (206) 781-0155
Fax: (206) 789-8424
http://www.labcor.net

A Professional Service Corporation in the Northwest

ISO 10312, Direct Raw Data

Job Number: 070434 **SEA**
Client: Idaho National Laboratory
Project Name: RARE

Report Number: 070434R06
Date Received: 4/23/2007

Client Sample No: **Lab blank #2** Lab/Cor Sample No: **S6**
Client Description: **Date Sampled: 4/16/2007**

Gr	No.	Loc.	ID	Prim	Tot	Class	Len	Wid	Asp	Analyte	Elements	Comment	Count Categories
G2	35	I7				NSD							

Count Categories

AFB>5, 3:1	Asbestos Fibers and Bundles > 5um and 3:1	AS>5, 3:1	Asbestos Structures >5um and 3:1
PAS	Primary Asbestos Structures	PCMEF-ISO	PCM Equivalent Fibers-ISO
PCMEF-US	PCM Equivalent Fibers-NIOSH	PCMES-ISO	PCM Equivalent Structures-ISO
PCMES-US	PCM Equivalent Structures-NIOSH	TAS	Total Asbestos Structures

Lab/Cor, Inc.
7619 6th Ave Nw
Seattle, WA 98117

Final Report

Phone: (206) 781-0155
Fax: (206) 789-8424
http://www.labcor.net

A Professional Service Corporation in the Northwest

ISO 10312, Direct Raw Data

Job Number: 070434 **SEA**
Client: Idaho National Laboratory
Project Name: RARE

Report Number: 070434R06
Date Received: 4/23/2007

Client Sample No: **Lot blank #1** Lab/Cor Sample No: **S7**
Client Description: **Date Sampled: 4/16/2007**

Gr	No.	Loc.	ID	Prim	Tot	Class	Len	Wid	Asp	Analyte	Elements	Comment	Count Categories
G1	1	A2				NSD							
G1	2	C2				NSD							
G1	3	E2				NSD							
G1	4	G2				NSD							
G1	5	I2				NSD							
G1	6	J4				NSD							
G1	7	H4				NSD							
G1	8	F4				NSD							
G1	9	D4				NSD							
G1	10	B4				NSD							
G1	11	A7				NSD							
G1	12	C7				NSD							
G1	13	E7				NSD							
G1	14	G7				NSD							
G1	15	I7				NSD							
G1	16	H9				NSD							
G1	17	F9				NSD							
G1	18	D9				NSD							
G1	19	B9				NSD							
G2	20	A2				NSD							
G2	21	C2				NSD							
G2	22	E2				NSD							
G2	23	G2				NSD							
G2	24	I2				NSD							
G2	25	J4				NSD							
G2	26	H4				NSD							
G2	27	F4				NSD							
G2	28	D4				NSD							
G2	29	B4				NSD							
G2	30	A7				NSD							
G2	31	C7				NSD							
G2	32	E7				NSD							
G2	33	G7				NSD							
G2	34	I7				NSD							

Count Categories

AFB>5, 3:1	Asbestos Fibers and Bundles > 5um and 3:1	AS>5, 3:1	Asbestos Structures >5um and 3:1
PAS	Primary Asbestos Structures	PCMEF-ISO	PCM Equivalent Fibers-ISO
PCMEF-US	PCM Equivalent Fibers-NIOSH	PCMES-ISO	PCM Equivalent Structures-ISO
PCMES-US	PCM Equivalent Structures-NIOSH	TAS	Total Asbestos Structures

Lab/Cor, Inc.
7619 6th Ave Nw
Seattle, WA 98117

Final Report

Phone: (206) 781-0155
Fax: (206) 789-8424
http://www.labcor.net

A Professional Service Corporation in the Northwest

ISO 10312, Direct Raw Data

Job Number: 070434 **SEA**
Client: Idaho National Laboratory
Project Name: RARE

Report Number: 070434R06
Date Received: 4/23/2007

Client Sample No: **Lot blank #1** Lab/Cor Sample No: **S7**
Client Description: **Date Sampled: 4/16/2007**

Gr	No.	Loc.	ID	Prim	Tot	Class	Len	Wid	Asp	Analyte	Elements	Comment	Count Categories
G2	35	H9				NSD							

Count Categories

AFB>5, 3:1	Asbestos Fibers and Bundles > 5um and 3:1	AS>5, 3:1	Asbestos Structures >5um and 3:1
PAS	Primary Asbestos Structures	PCMEF-ISO	PCM Equivalent Fibers-ISO
PCMEF-US	PCM Equivalent Fibers-NIOSH	PCMES-ISO	PCM Equivalent Structures-ISO
PCMES-US	PCM Equivalent Structures-NIOSH	TAS	Total Asbestos Structures

Lab/Cor, Inc.
7619 6th Ave Nw
Seattle, WA 98117

Final Report

Phone: (206) 781-0155
Fax: (206) 789-8424
http://www.labcor.net

A Professional Service Corporation in the Northwest

ISO 10312, Direct Raw Data

Job Number: 070434 **SEA**
Client: Idaho National Laboratory
Project Name: RARE

Report Number: 070434R06
Date Received: 4/23/2007

Client Sample No: **Lot blank #2** Lab/Cor Sample No: **S8**
Client Description: **Date Sampled: 4/16/2007**

Gr	No.	Loc.	ID	Prim	Tot	Class	Len	Wid	Asp	Analyte	Elements	Comment	Count Categories
G1	1	A2				NSD							
G1	2	C2				NSD							
G1	3	E2				NSD							
G1	4	G2				NSD							
G1	5	I2				NSD							
G1	6	J4				NSD							
G1	7	H4				NSD							
G1	8	F4				NSD							
G1	9	D4				NSD							
G1	10	B4				NSD							
G1	11	A7				NSD							
G1	12	C7				NSD							
G1	13	E7				NSD							
G1	14	G7				NSD							
G1	15	I7				NSD							
G1	16	J9				NSD							
G1	17	H9				NSD							
G1	18	F9				NSD							
G1	19	D9				NSD							
G1	20	B9				NSD							
G2	21	A2				NSD							
G2	22	C2				NSD							
G2	23	E2				NSD							
G2	24	G2				NSD							
G2	25	I2				NSD							
G2	26	J4				NSD							
G2	27	H4				NSD							
G2	28	F4				NSD							
G2	29	D4				NSD							
G2	30	B4				NSD							
G2	31	A7				NSD							
G2	32	C7				NSD							
G2	33	E7				NSD							
G2	34	G7				NSD							

Count Categories

AFB>5, 3:1	Asbestos Fibers and Bundles > 5um and 3:1	AS>5, 3:1	Asbestos Structures >5um and 3:1
PAS	Primary Asbestos Structures	PCMEF-ISO	PCM Equivalent Fibers-ISO
PCMEF-US	PCM Equivalent Fibers-NIOSH	PCMES-ISO	PCM Equivalent Structures-ISO
PCMES-US	PCM Equivalent Structures-NIOSH	TAS	Total Asbestos Structures

Lab/Cor, Inc.
7619 6th Ave Nw
Seattle, WA 98117

Final Report

Phone: (206) 781-0155
Fax: (206) 789-8424
http://www.labcor.net

A Professional Service Corporation in the Northwest

ISO 10312, Direct Raw Data

Job Number: 070434 **SEA**
Client: Idaho National Laboratory
Project Name: RARE

Report Number: 070434R06
Date Received: 4/23/2007

Client Sample No: **Lot blank #2** Lab/Cor Sample No: **S8**
Client Description: **Date Sampled: 4/16/2007**

Gr	No.	Loc.	ID	Prim	Tot	Class	Len	Wid	Asp	Analyte	Elements	Comment	Count Categories
G2	35	I7				NSD							

Count Categories

AFB>5, 3:1	Asbestos Fibers and Bundles > 5um and 3:1	AS>5, 3:1	Asbestos Structures >5um and 3:1
PAS	Primary Asbestos Structures	PCMEF-ISO	PCM Equivalent Fibers-ISO
PCMEF-US	PCM Equivalent Fibers-NIOSH	PCMES-ISO	PCM Equivalent Structures-ISO
PCMES-US	PCM Equivalent Structures-NIOSH	TAS	Total Asbestos Structures

Lab/Cor, Inc.
7619 6th Ave Nw
Seattle, WA 98117

Final Report

Phone: (206) 781-0155
Fax: (206) 789-8424
http://www.labcor.net

A Professional Service Corporation in the Northwest

ISO 10312, Direct Raw Data

Job Number: 070434 **SEA**
Client: Idaho National Laboratory
Project Name: RARE

Report Number: 070434R06
Date Received: 4/23/2007

Client Sample No: **cleaning protocol 1** Lab/Cor Sample No: **S9**
Client Description: **Date Sampled: 4/16/2007**

Gr	No.	Loc.	ID	Prim	Tot	Class	Len	Wid	Asp	Analyte	Elements	Comment	Count Categories
G1	1	A2				NSD							
G1	2	C2				NSD							
G1	3	E2				NSD							
G1	4	G2				NSD							
G1	5	I2				NSD							
G1	6	J4				NSD							
G1	7	H4				NSD							
G1	8	F4				NSD							
G1	9	D4				NSD							
G1	10	B4				NSD							
G1	11	A7				NSD							
G1	12	C7				NSD							
G1	13	E7				NSD							
G1	14	G7				NSD							
G1	15	I7				NSD							
G1	16	J9				NSD							
G1	17	H9				NSD							
G1	18	F9				NSD							
G1	19	D9				NSD							
G1	20	B9				NSD							
G2	21	A2				NSD							
G2	22	C2				NSD							
G2	23	E2				NSD							
G2	24	G2				NSD							
G2	25	I2				NSD							
G2	26	H4				NSD							
G2	27	F4				NSD							
G2	28	D4				NSD							
G2	29	B4				NSD							
G2	30	A7				NSD							
G2	31	C7				NSD							
G2	32	E7				NSD							
G2	33	G7				NSD							
G2	34	I7				NSD							

Count Categories

AFB>5, 3:1	Asbestos Fibers and Bundles > 5um and 3:1	AS>5, 3:1	Asbestos Structures >5um and 3:1
PAS	Primary Asbestos Structures	PCMEF-ISO	PCM Equivalent Fibers-ISO
PCMEF-US	PCM Equivalent Fibers-NIOSH	PCMES-ISO	PCM Equivalent Structures-ISO
PCMES-US	PCM Equivalent Structures-NIOSH	TAS	Total Asbestos Structures

Lab/Cor, Inc.
7619 6th Ave Nw
Seattle, WA 98117

Final Report

Phone: (206) 781-0155
Fax: (206) 789-8424
http://www.labcor.net

A Professional Service Corporation in the Northwest

ISO 10312, Direct Raw Data

Job Number: 070434 **SEA**
Client: Idaho National Laboratory
Project Name: RARE

Report Number: 070434R06
Date Received: 4/23/2007

Client Sample No: **cleaning protocol 1** Lab/Cor Sample No: **S9**
Client Description: **Date Sampled: 4/16/2007**

Gr	No.	Loc.	ID	Prim	Tot	Class	Len	Wid	Asp	Analyte	Elements	Comment	Count Categories
G2	35	H9				NSD							

Count Categories

AFB>5, 3:1	Asbestos Fibers and Bundles > 5um and 3:1	AS>5, 3:1	Asbestos Structures >5um and 3:1
PAS	Primary Asbestos Structures	PCMEF-ISO	PCM Equivalent Fibers-ISO
PCMEF-US	PCM Equivalent Fibers-NIOSH	PCMES-ISO	PCM Equivalent Structures-ISO
PCMES-US	PCM Equivalent Structures-NIOSH	TAS	Total Asbestos Structures

Lab/Cor, Inc.
7619 6th Ave Nw
Seattle, WA 98117

Final Report

Phone: (206) 781-0155
Fax: (206) 789-8424
http://www.labcor.net

A Professional Service Corporation in the Northwest

ISO 10312, Direct Raw Data

Job Number: 070434 **SEA**
Client: Idaho National Laboratory
Project Name: RARE

Report Number: 070434R06
Date Received: 4/23/2007

Client Sample No: **cleaning protocol 2** Lab/Cor Sample No: **S10**
Client Description: **Date Sampled: 4/16/2007**

Gr	No.	Loc.	ID	Prim	Tot	Class	Len	Wid	Asp	Analyte	Elements	Comment	Count Categories
G1	1	A2	AZQ	1	1	F	5.5	1.1	5	Tremolite	MG,SI,CA, FE		AS>5, 3:1, AFB>5, 3:1, PCMEF-US, PCMES-US, PCMEF-ISO, PCMES-ISO

ItemType	ItemNum	Confirmed	Comment
Brightfield	P2981 BF		
Diffraction	P2981	KM 5/1/2007	ZONE AXIS [4 1 2]
Spectra	P17895		

G1	2	C2				NSD							
G1	3	E2				NSD							
G1	4	G2				NSD							
G1	5	I2				NSD							
G1	6	H3				NSD							
G1	7	G3				NSD							
G1	8	F3				NSD							
G1	9	E3				NSD							
G1	10	D3				NSD							
G1	11	C3				NSD							
G1	12	B3				NSD							
G1	13	B2				NSD							
G1	14	H1				NSD							
G1	15	G1				NSD							
G1	16	F1				NSD							
G1	17	E1				NSD							
G1	18	D1				NSD							
G1	19	C1				NSD							
G1	20	B1				NSD							
G2	21	A2	ADQ	2		MD 1-1	8	6	1.3	Tremolite	MG,SI,CA, FE		AS>5, 3:1

ItemType	ItemNum	Confirmed	Comment
Brightfield	P2982 BF		
Diffraction	P2982	KM 5/1/2007	5.3A IMAGE
Spectra	P17896		

G2	21	A2	ADQ		2	MF	5.2	0.53	9.8	Tremolite			AFB>5, 3:1, PCMEF-US, PCMEF-ISO
G2	22	C2				NSD							
G2	23	E2				NSD							

Count Categories

AFB>5, 3:1	Asbestos Fibers and Bundles > 5um and 3:1	AS>5, 3:1	Asbestos Structures >5um and 3:1
PAS	Primary Asbestos Structures	PCMEF-ISO	PCM Equivalent Fibers-ISO
PCMEF-US	PCM Equivalent Fibers-NIOSH	PCMES-ISO	PCM Equivalent Structures-ISO
PCMES-US	PCM Equivalent Structures-NIOSH	TAS	Total Asbestos Structures

Lab/Cor, Inc.
7619 6th Ave Nw
Seattle, WA 98117

Final Report

Phone: (206) 781-0155
Fax: (206) 789-8424
http://www.labcor.net

A Professional Service Corporation in the Northwest

ISO 10312, Direct Raw Data

Job Number: 070434 **SEA**
Client: Idaho National Laboratory
Project Name: RARE

Report Number: 070434R06
Date Received: 4/23/2007

Client Sample No: **cleaning protocol 2** Lab/Cor Sample No: **S10**
Client Description: **Date Sampled: 4/16/2007**

Gr	No.	Loc.	ID	Prim	Tot	Class	Len	Wid	Asp	Analyte	Elements	Comment	Count Categories
G2	24	G2				NSD							
G2	25	I2				NSD							
G2	26	J4				NSD							
G2	27	H4				NSD							
G2	28	F4				NSD							
G2	29	D4				NSD							
G2	30	B4				NSD							
G2	31	A7				NSD							
G2	32	C7				NSD							
G2	33	E7				NSD							
G2	34	G7				NSD							
G2	35	I7				NSD							

Count Categories

AFB>5, 3:1	Asbestos Fibers and Bundles > 5um and 3:1	AS>5, 3:1	Asbestos Structures >5um and 3:1
PAS	Primary Asbestos Structures	PCMEF-ISO	PCM Equivalent Fibers-ISO
PCMEF-US	PCM Equivalent Fibers-NIOSH	PCMES-ISO	PCM Equivalent Structures-ISO
PCMES-US	PCM Equivalent Structures-NIOSH	TAS	Total Asbestos Structures

Lab/Cor, Inc.
7619 6th Ave Nw
Seattle, WA 98117

Final Report

Phone: (206) 781-0155
Fax: (206) 789-8424
http://www.labcor.net

A Professional Service Corporation in the Northwest

ISO 10312, Direct Raw Data

Job Number: 070434 **SEA**
Client: Idaho National Laboratory
Project Name: RARE

Report Number: 070434R06
Date Received: 4/23/2007

Client Sample No: **Sand blank** Lab/Cor Sample No: **S11**
Client Description: **Date Sampled: 4/16/2007**

Gr	No.	Loc.	ID	Prim	Tot	Class	Len	Wid	Asp	Analyte	Elements	Comment	Count Categories
G1	1	C2				NSD							
G1	2	E2				NSD							
G1	3	G2				NSD							
G1	4	I2				NSD							
G1	5	J4				NSD							
G1	6	H4				NSD							
G1	7	F4				NSD							
G1	8	D4				NSD							
G1	9	B4				NSD							
G1	10	A7				NSD							
G1	11	C7				NSD							
G1	12	E7				NSD							
G1	13	G7				NSD							
G1	14	I7				NSD							
G1	15	J9				NSD							
G1	16	H9				NSD							
G1	17	F9				NSD							
G1	18	D9				NSD							
G1	19	B9				NSD							
G2	20	A2				NSD							
G2	21	C2				NSD							
G2	22	E2				NSD							
G2	23	G2				NSD							
G2	24	I2				NSD							
G2	25	J4				NSD							
G2	26	H4				NSD							
G2	27	F4				NSD							
G2	28	D4				NSD							
G2	29	B4				NSD							
G2	30	A7				NSD							
G2	31	C7				NSD							
G2	32	E7				NSD							
G2	33	G7				NSD							
G2	34	I7				NSD							

Count Categories

AFB>5, 3:1	Asbestos Fibers and Bundles > 5um and 3:1	AS>5, 3:1	Asbestos Structures >5um and 3:1
PAS	Primary Asbestos Structures	PCMEF-ISO	PCM Equivalent Fibers-ISO
PCMEF-US	PCM Equivalent Fibers-NIOSH	PCMES-ISO	PCM Equivalent Structures-ISO
PCMES-US	PCM Equivalent Structures-NIOSH	TAS	Total Asbestos Structures

Lab/Cor, Inc.
7619 6th Ave Nw
Seattle, WA 98117

Final Report

Phone: (206) 781-0155
Fax: (206) 789-8424
http://www.labcor.net

A Professional Service Corporation in the Northwest

ISO 10312, Direct Raw Data

Job Number: 070434 **SEA**
Client: Idaho National Laboratory
Project Name: RARE

Report Number: 070434R06
Date Received: 4/23/2007

Client Sample No: **Sand blank** Lab/Cor Sample No: **S11**
Client Description: **Date Sampled: 4/16/2007**

Gr	No.	Loc.	ID	Prim	Tot	Class	Len	Wid	Asp	Analyte	Elements	Comment	Count Categories
G2	35	H9				NSD							

Count Categories

AFB>5, 3:1	Asbestos Fibers and Bundles > 5um and 3:1	AS>5, 3:1	Asbestos Structures >5um and 3:1
PAS	Primary Asbestos Structures	PCMEF-ISO	PCM Equivalent Fibers-ISO
PCMEF-US	PCM Equivalent Fibers-NIOSH	PCMES-ISO	PCM Equivalent Structures-ISO
PCMES-US	PCM Equivalent Structures-NIOSH	TAS	Total Asbestos Structures

Lab/Cor, Inc.
7619 6th Ave Nw
Seattle, WA 98117

Final Report

Phone: (206) 781-0155
Fax: (206) 789-8424
http://www.labcor.net

A Professional Service Corporation in the Northwest

ISO 10312, Direct Raw Data

Job Number: 070434 **SEA**
Client: Idaho National Laboratory
Project Name: RARE

Report Number: 070434R06
Date Received: 4/23/2007

Client Sample No: **FB-4-R1** Lab/Cor Sample No: **S12**
Client Description: **Date Sampled: 4/16/2007**

Gr	No.	Loc.	ID	Prim	Tot	Class	Len	Wid	Asp	Analyte	Elements	Comment	Count Categories
G1	1	E4	AZQ	1		MD 1-1	20.5	9	2.3	Tremolite	Mg, Si, Ca, Fe		AS>5, 3:1
						ItemType	ItemNum				Confirmed	Comment	
						Brightfield	J3389 BF						
						Diffraction	J3389				KM 5/7/2007	ZONE AXIS [-2 -1 1]	
						Spectra	J2849						
G1	1	E4	AZQ		1	MF	20	0.75	26.7	Tremolite			AFB>5, 3:1, PCMEF-US, PCMEF-ISO
G1	2	G4	AZQ	2	2	B	11.2	1.25	9	Tremolite			AFB>5, 3:1, AS>5, 3:1, PCMES-US, PCMEF-US, PCMES-ISO, PCMEF-ISO
G1	3	I4				NSD							
G1	4	A4				NSD							
G1	5	C4				NSD							
G1	6	A2				NSD							
G1	7	C2				NSD							
G1	8	E2	CDQ	3		CD 3-1	1.15	1	1.1	Chrysotile	Mg, Si		
						ItemType	ItemNum				Confirmed	Comment	
						Brightfield	J3391 BF						
						Diffraction	J3391				KM 5/7/2007		
						Spectra	J2851						
G1	8	E2	CDQ		3	CF	1.1	0.1	11	Chrysotile			
G1	8	E2	CDQ		4	CF	1	0.12	8.3	Chrysotile			
G1	8	E2	CDQ		5	CF	8	0.1	80	Chrysotile			AFB>5, 3:1
G1	8	E2	CD	4	6	B	1.2	0.2	6	Chrysotile			
G1	8	E2	CD	5	7	B	1.25	0.2	6.2	Chrysotile			
G1	9	G2				NSD							
G1	10	I2	ADQ	6	8	F	2.7	0.51	5.3	Tremolite	Mg, Si, Ca, Fe		
						ItemType	ItemNum				Confirmed	Comment	
						Brightfield	J3392 BF						
						Diffraction	J3392				KM 5/7/2007	5.3A IMAGE	
						Spectra	J2852						
G1	11	J7	CMQ	7		CD 2-0	2.2	1.2	1.8	Chrysotile	Mg, Si		
G1	11	J7	CMQ		9	CF	2.2	0.05	44	Chrysotile			
G1	11	J7	CMQ		10	CF	1.2	0.05	24	Chrysotile			

Count Categories

AFB>5, 3:1	Asbestos Fibers and Bundles > 5um and 3:1	AS>5, 3:1	Asbestos Structures >5um and 3:1
PAS	Primary Asbestos Structures	PCMEF-ISO	PCM Equivalent Fibers-ISO
PCMEF-US	PCM Equivalent Fibers-NIOSH	PCMES-ISO	PCM Equivalent Structures-ISO
PCMES-US	PCM Equivalent Structures-NIOSH	TAS	Total Asbestos Structures

Lab/Cor, Inc.
7619 6th Ave Nw
Seattle, WA 98117

Final Report

Phone: (206) 781-0155
Fax: (206) 789-8424
http://www.labcor.net

A Professional Service Corporation in the Northwest

ISO 10312, Direct Raw Data

Job Number: 070434 **SEA**
Client: Idaho National Laboratory
Project Name: RARE

Report Number: 070434R06
Date Received: 4/23/2007

Client Sample No: **FB-4-R1** Lab/Cor Sample No: **S12**
Client Description: **Date Sampled: 4/16/2007**

Gr	No.	Loc.	ID	Prim	Tot	Class	Len	Wid	Asp	Analyte	Elements	Comment	Count Categories
G1	12	H7	ADQ	8	11	F	16.75	0.8	20.9	Tremolite	Mg, Si, Ca, Fe		AS>5, 3:1, AFB>5, 3:1, PCMES-US, PCMEF-US, PCMEF-ISO, PCMES-ISO

ItemType	ItemNum	Confirmed	Comment
Brightfield	J3393 BF		
Diffraction	J3393	KM 5/7/2007	5.3A IMAGE
Spectra	J2853		

G1	13	F7				NSD							
G1	14	D7				NSD							
G1	15	B7	ADQ	9	12	F	4.5	0.82	5.5	Tremolite	Mg, Al, Si, Ca, Fe		

ItemType	ItemNum	Confirmed	Comment
Brightfield	J3394 BF		
Diffraction	J3394	KM 5/7/2007	5.3A IMAGE
Spectra	J2854		

G1	16	A9				NSD							
G1	17	C9	ADQ	10		MD 2-0	3	1.7	1.8	Tremolite	Mg, Si, Ca		

ItemType	ItemNum	Confirmed	Comment
Brightfield	J3395 BF		
Diffraction	J3395	KM 5/7/2007	5.3A IMAGE
Spectra	J2855		

G1	17	C9	ADQ		13	MB	2.5	0.4	6.2	Tremolite			
G1	17	C9	ADQ		14	MF	2	0.2	10	Tremolite			
G1	18	E9				NSD							
G1	19	G9				NSD							
G2	20	A2				NSD							
G2	21	C2				NSD							
G2	22	E2				NSD							
G2	23	G2				NSD							
G2	24	I2	CMQ	11	15	B	5.5	0.45	12.2	Chrysotile	Mg, Si		AFB>5, 3:1, AS>5, 3:1, PCMEF-US, PCMES-US, PCMEF-ISO, PCMES-ISO

ItemType	ItemNum	Confirmed	Comment
Brightfield	J3396 BF		

G2	25	J4				NSD							

Count Categories

AFB>5, 3:1	Asbestos Fibers and Bundles > 5um and 3:1	AS>5, 3:1	Asbestos Structures >5um and 3:1
PAS	Primary Asbestos Structures	PCMEF-ISO	PCM Equivalent Fibers-ISO
PCMEF-US	PCM Equivalent Fibers-NIOSH	PCMES-ISO	PCM Equivalent Structures-ISO
PCMES-US	PCM Equivalent Structures-NIOSH	TAS	Total Asbestos Structures

Lab/Cor, Inc.
7619 6th Ave Nw
Seattle, WA 98117

Final Report

Phone: (206) 781-0155
Fax: (206) 789-8424
http://www.labcor.net

A Professional Service Corporation in the Northwest

ISO 10312, Direct Raw Data

Job Number: 070434 **SEA**
Client: Idaho National Laboratory
Project Name: RARE

Report Number: 070434R06
Date Received: 4/23/2007

Client Sample No: **FB-4-R1** Lab/Cor Sample No: **S12**
Client Description: **Date Sampled: 4/16/2007**

Gr	No.	Loc.	ID	Prim	Tot	Class	Len	Wid	Asp	Analyte	Elements	Comment	Count Categories
G2	26	H4	ADQ	12		MD 1-1	16.5	4	4.1	Tremolite	Mg, Si, Ca, Fe		AS>5, 3:1, PCMES-US

ItemType	ItemNum	Confirmed	Comment
Brightfield	J3397 BF		
Spectra	J2856		

Gr	No.	Loc.	ID	Prim	Tot	Class	Len	Wid	Asp	Analyte	Elements	Comment	Count Categories
G2	26	H4	ADQ		16	MF	10	1.5	6.7	Tremolite			AFB>5, 3:1, PCMEF-US, PCMEF-ISO
G2	27	F4	AMQ	13	17	F	4	0.3	13.3	Tremolite	Mg, Si, Ca, Fe		
G2	28	A4	AMQ	14		MD 1-0	9	5.5	1.6	Tremolite	Mg, Si, Ca, Fe		AS>5, 3:1
G2	28	A4	AMQ		18	MB	3	0.22	13.6	Tremolite			
G2	29	D4				NSD							
G2	30	A7				NSD							
G2	31	C7				NSD							
G2	32	E7	AMQ	15	19	F	2.2	0.35	6.3	Tremolite	Mg, Si, Ca, Fe		
G2	33	G7	AMQ	16	20	F	2.5	0.5	5	Tremolite	Mg, Si, Ca, Fe		
G2	34	I7	CMQ	17	21	F	0.65	0.08	8.1	Chrysotile			
G2	35	H9				NSD							

Count Categories

AFB>5, 3:1	Asbestos Fibers and Bundles > 5um and 3:1	AS>5, 3:1	Asbestos Structures >5um and 3:1
PAS	Primary Asbestos Structures	PCMEF-ISO	PCM Equivalent Fibers-ISO
PCMEF-US	PCM Equivalent Fibers-NIOSH	PCMES-ISO	PCM Equivalent Structures-ISO
PCMES-US	PCM Equivalent Structures-NIOSH	TAS	Total Asbestos Structures

Lab/Cor, Inc.
7619 6th Ave Nw
Seattle, WA 98117

Final Report

Phone: (206) 781-0155
Fax: (206) 789-8424
http://www.labcor.net

A Professional Service Corporation in the Northwest

ISO 10312, Direct Raw Data

Job Number: 070434 **SEA**
Client: Idaho National Laboratory
Project Name: RARE

Report Number: 070434R06
Date Received: 4/23/2007

Client Sample No: **FB-4-R2** Lab/Cor Sample No: **S13**
Client Description: **Date Sampled: 4/16/2007**

Gr	No.	Loc.	ID	Prim	Tot	Class	Len	Wid	Asp	Analyte	Elements	Comment	Count Categories
G1	1	A2				NSD							
G1	2	C2				NSD							
G1	3	E2				NSD							
G1	4	G2				NSD							
G1	5	I2				NSD							
G1	6	J4	ADQ	1	1	F	2.2	0.4	5.5	Tremolite	Mg, Si, Ca, Fe		
G1	7	H4	ADQ	2	2	F	7.5	0.95	7.9	Tremolite	Mg, Si, Ca, Fe		AS>5, 3:1, AFB>5, 3:1, PCMEF-US, PCMES-US, PCMEF-ISO, PCMES-ISO
G1	8	F4				NSD							
G1	9	D4				NSD							
G1	10	B4				NSD							
G1	11	A7				NSD							
G1	12	C7				NSD							
G1	13	E7				NSD							
G1	14	G7	ADQ	3	3	F	2.35	0.65	3.6	Tremolite	Mg, Si, Ca, Fe		

ItemType	ItemNum	Confirmed	Comment
Brightfield	J3402 BF		
Spectra	J2858		

Gr	No.	Loc.	ID	Prim	Tot	Class	Len	Wid	Asp	Analyte	Elements	Comment	Count Categories
G1	14	G7	ADQ	4	4	F	10	0.85	11.8	Tremolite	Mg, Al, Si, Ca, Mn, Fe		AS>5, 3:1, AFB>5, 3:1, PCMEF-US, PCMES-US, PCMEF-ISO, PCMES-ISO

ItemType	ItemNum	Confirmed	Comment
Brightfield	J3404 BF		
Spectra	J2859		

Gr	No.	Loc.	ID	Prim	Tot	Class	Len	Wid	Asp	Analyte	Elements	Comment	Count Categories
G1	15	I7				NSD							
G1	16	A9				NSD							
G1	17	C9				NSD							
G1	18	E9				NSD							
G1	19	G9				NSD							
G1	20	I9				NSD							

Count Categories

AFB>5, 3:1	Asbestos Fibers and Bundles > 5um and 3:1	AS>5, 3:1	Asbestos Structures >5um and 3:1
PAS	Primary Asbestos Structures	PCMEF-ISO	PCM Equivalent Fibers-ISO
PCMEF-US	PCM Equivalent Fibers-NIOSH	PCMES-ISO	PCM Equivalent Structures-ISO
PCMES-US	PCM Equivalent Structures-NIOSH	TAS	Total Asbestos Structures

Lab/Cor, Inc.
7619 6th Ave Nw
Seattle, WA 98117

Final Report

Phone: (206) 781-0155
Fax: (206) 789-8424
http://www.labcor.net

A Professional Service Corporation in the Northwest

ISO 10312, Direct Raw Data

Job Number: 070434 **SEA**
Client: Idaho National Laboratory
Project Name: RARE

Report Number: 070434R06
Date Received: 4/23/2007

Client Sample No: **FB-4-R2** Lab/Cor Sample No: **S13**
Client Description: **Date Sampled: 4/16/2007**

Gr	No.	Loc.	ID	Prim	Tot	Class	Len	Wid	Asp	Analyte	Elements	Comment	Count Categories
G2	21	A2	NAM	5	5	F	2.25	0.3	7.5	Non Asbestos Mineral	Ti		
						ItemType	ItemNum				Confirmed	Comment	
						Brightfield	J3407 BF						
G2	22	C2				NSD							
G2	23	E2				NSD							
G2	24	G2	NAM	6	6	F	3.1	0.5	6.2	Non Asbestos Mineral	Fe		
						ItemType	ItemNum				Confirmed	Comment	
						Brightfield	J3408 BF						
G2	25	I2	ADQ	7		MD 1-0	4.2	2.7	1.6	Tremolite	Mg, Si, Ca, Fe		
						ItemType	ItemNum				Confirmed	Comment	
						Brightfield	J3409 BF						
						Diffraction	J3409				KM 5/8/2007	5.3A IMAGE	
						Spectra	J2860						
G2	25	I2	ADQ		7	MF	4	0.5	8	Tremolite			
G2	26	J4				NSD							
G2	27	H4				NSD							
G2	28	F4	AZQ	8	8	F	23.75	1.2	19.8	Tremolite	Mg, Si, Ca, Fe		AS>5, 3:1, AFB>5, 3:1, PCMEF-US, PCMES-US, PCMEF-ISO, PCMES-ISO
						ItemType	ItemNum				Confirmed	Comment	
						Brightfield	J3410 BF						
						Diffraction	J3410				KM 5/8/2007	ZONE AXIS [-2 0 3]	
						Spectra	J2861						
G2	29	D4				NSD							
G2	30	B4				NSD							
G2	31	A7				NSD							
G2	32	C7	NAM	9	9	F	6.8	1	6.8	Non Asbestos Mineral	S, Ca		

Count Categories

AFB>5, 3:1	Asbestos Fibers and Bundles > 5um and 3:1	AS>5, 3:1	Asbestos Structures >5um and 3:1
PAS	Primary Asbestos Structures	PCMEF-ISO	PCM Equivalent Fibers-ISO
PCMEF-US	PCM Equivalent Fibers-NIOSH	PCMES-ISO	PCM Equivalent Structures-ISO
PCMES-US	PCM Equivalent Structures-NIOSH	TAS	Total Asbestos Structures

Lab/Cor, Inc.
7619 6th Ave Nw
Seattle, WA 98117

Final Report

Phone: (206) 781-0155
Fax: (206) 789-8424
http://www.labcor.net

A Professional Service Corporation in the Northwest

ISO 10312, Direct Raw Data

Job Number: 070434 **SEA**
Client: Idaho National Laboratory
Project Name: RARE

Report Number: 070434R06
Date Received: 4/23/2007

Client Sample No: **FB-4-R2** Lab/Cor Sample No: **S13**
Client Description: **Date Sampled: 4/16/2007**

Gr	No.	Loc.	ID	Prim	Tot	Class	Len	Wid	Asp	Analyte	Elements	Comment	Count Categories
G2	32	C7	NAM	10		MD 1-0	2.5	0.5	5	Non Asbestos Mineral	Al, Si		
						ItemType	ItemNum				Confirmed	Comment	
						Brightfield	J3411 BF						
G2	32	C7	NAM		10	MF	1.1	0.1	11	Non Asbestos Mineral			
G2	33	E7				NSD							
G2	34	I7	AQ	11	11	F	6	1.25	4.8	Tremolite	Mg, Si , Ca, Fe		PCMEF-US, PCMES-US, PCMEF-ISO, PCMES-ISO
G2	35	G7				NSD							

Count Categories

AFB>5, 3:1	Asbestos Fibers and Bundles > 5um and 3:1	AS>5, 3:1	Asbestos Structures >5um and 3:1
PAS	Primary Asbestos Structures	PCMEF-ISO	PCM Equivalent Fibers-ISO
PCMEF-US	PCM Equivalent Fibers-NIOSH	PCMES-ISO	PCM Equivalent Structures-ISO
PCMES-US	PCM Equivalent Structures-NIOSH	TAS	Total Asbestos Structures

Lab/Cor, Inc.
7619 6th Ave Nw
Seattle, WA 98117

Final Report

Phone: (206) 781-0155
Fax: (206) 789-8424
http://www.labcor.net

A Professional Service Corporation in the Northwest

ISO 10312, Direct Raw Data

Job Number: 070434 **SEA**
Client: Idaho National Laboratory
Project Name: RARE

Report Number: 070434R06
Date Received: 4/23/2007

Client Sample No: **FB-4-R3** Lab/Cor Sample No: **S14**
Client Description: **Date Sampled: 4/16/2007**

Gr	No.	Loc.	ID	Prim	Tot	Class	Len	Wid	Asp	Analyte	Elements	Comment	Count Categories
G1	1	A2				NSD							
G1	2	C2				NSD							
G1	3	E2	ADQ	1	1	F	4.6	1.15	4	Tremolite	Mg, Si, Ca		
						ItemType	ItemNum				Confirmed	Comment	
						Brightfield	J3412 BF						
						Diffraction	J3412				KM 5/8/2007	5.3A IMAGE	
						Spectra	J2862						
G1	3	E2	AZQ	2	2	F	7.4	0.75	9.9	Tremolite	Mg, Al, Si, Ca, Fe		AS>5, 3:1, AFB>5, 3:1, PCMEF-US, PCMES-US, PCMEF-ISO, PCMES-ISO
						ItemType	ItemNum				Confirmed	Comment	
						Brightfield	J3413 BF						
						Diffraction	J3413				KM 5/8/2007	ZONE AXIS [2 1 1]	
						Spectra	J2863						
G1	4	G2				NSD							
G1	5	I2				NSD							
G1	6	J4				NSD							
G1	7	H4				NSD							
G1	8	F4	ADQ	3	3	F	4.85	1.2	4	Tremolite	Mg, Si, Ca		
						ItemType	ItemNum				Confirmed	Comment	
						Spectra	J2864						
G1	9	D4	ADQ	4	4	F	11	1	11	Tremolite	Mg, Si, Ca, Fe		AS>5, 3:1, AFB>5, 3:1, PCMEF-US, PCMES-US, PCMEF-ISO, PCMES-ISO
G1	10	B4				NSD							
G1	11	A7				NSD							
G1	12	C7				NSD							
G1	13	E7				NSD							
G1	14	G7	ADQ	5	5	F	2.2	5.1	0.4	Tremolite	Mg, Si, Ca, Fe		
G1	15	J7				NSD							
G1	16	J9				NSD							
G1	17	H9	ADQ	6	6	F	30	2.5	12	Tremolite	Mg, Si, Ca, Fe		AS>5, 3:1, AFB>5, 3:1, PCMEF-US, PCMES-US, PCMEF-ISO, PCMES-ISO
						ItemType	ItemNum				Confirmed	Comment	
						Brightfield	J3414 BF						

Count Categories

AFB>5, 3:1	Asbestos Fibers and Bundles > 5um and 3:1	AS>5, 3:1	Asbestos Structures >5um and 3:1
PAS	Primary Asbestos Structures	PCMEF-ISO	PCM Equivalent Fibers-ISO
PCMEF-US	PCM Equivalent Fibers-NIOSH	PCMES-ISO	PCM Equivalent Structures-ISO
PCMES-US	PCM Equivalent Structures-NIOSH	TAS	Total Asbestos Structures

Lab/Cor, Inc.
7619 6th Ave Nw
Seattle, WA 98117

Final Report

Phone: (206) 781-0155
Fax: (206) 789-8424
http://www.labcor.net

A Professional Service Corporation in the Northwest

ISO 10312, Direct Raw Data

Job Number: 070434 **SEA**
Client: Idaho National Laboratory
Project Name: RARE

Report Number: 070434R06
Date Received: 4/23/2007

Client Sample No: **FB-4-R3** Lab/Cor Sample No: **S14**
Client Description: **Date Sampled: 4/16/2007**

Gr	No.	Loc.	ID	Prim	Tot	Class	Len	Wid	Asp	Analyte	Elements	Comment	Count Categories
G1	17	H9	ADQ	7		MD 1-1	20	9	2.2	Tremolite	Mg, Si, Ca, Fe		AS>5, 3:1
G1	17	H9	ADQ		7	MF	6.2	1.35	4.6	Tremolite			PCMEF-US, PCMEF-ISO
G1	18	F9	ADQ	8	8	F	1.7	0.2	8.5	Tremolite			
G1	19	D9				NSD							
G1	20	B9				NSD							
G2	21	A2				NSD							
G2	22	C2				NSD							
G2	23	E2				NSD							
G2	24	G2				NSD							
G2	25	I2				NSD							
G2	26	I4	ADQ	9		MD 1-0	4	1.8	2.2	Tremolite	Mg, Si, Ca, Fe		
G2	26	I4	ADQ		9	MF	4	0.6	6.7	Tremolite			
G2	27	H4				NSD							
G2	28	F4	ADQ	10	10	F	4.35	0.65	6.7	Tremolite	Mg, Si, Ca, Fe		
G2	29	D4	NAM	11	11	F	8.35	0.45	18.6	Non Asbestos Mineral	Al, Si		

ItemType	ItemNum	Confirmed	Comment
Brightfield	J3415 BF		

Gr	No.	Loc.	ID	Prim	Tot	Class	Len	Wid	Asp	Analyte	Elements	Comment	Count Categories
G2	30	B4				NSD							
G2	31	A7				NSD							
G2	32	C7				NSD							
G2	33	E7	ADQ	12		MD 1-1	8.5	7.5	1.1	Tremolite	Mg, Si, Ca, Fe		AS>5, 3:1
G2	33	E7	ADQ		12	MF	5.85	0.9	6.5	Tremolite			AFB>5, 3:1, PCMEF-US, PCMEF-ISO
G2	34	G7				NSD							
G2	35	I7				NSD							

Count Categories

AFB>5, 3:1	Asbestos Fibers and Bundles > 5um and 3:1	AS>5, 3:1	Asbestos Structures >5um and 3:1
PAS	Primary Asbestos Structures	PCMEF-ISO	PCM Equivalent Fibers-ISO
PCMEF-US	PCM Equivalent Fibers-NIOSH	PCMES-ISO	PCM Equivalent Structures-ISO
PCMES-US	PCM Equivalent Structures-NIOSH	TAS	Total Asbestos Structures

Lab/Cor, Inc.
7619 6th Ave Nw
Seattle, WA 98117

Final Report

Phone: (206) 781-0155
Fax: (206) 789-8424
http://www.labcor.net

A Professional Service Corporation in the Northwest

ISO 10312, Direct Raw Data

Job Number: 070434 **SEA**
Client: Idaho National Laboratory
Project Name: RARE

Report Number: 070434R06
Date Received: 4/23/2007

Client Sample No: **FB-4-R4** Lab/Cor Sample No: **S15**
Client Description: **Date Sampled: 4/16/2007**

Gr	No.	Loc.	ID	Prim	Tot	Class	Len	Wid	Asp	Analyte	Elements	Comment	Count Categories
G1	1	A2				NSD							
G1	2	C2				NSD							
G1	3	E2				NSD							
G1	4	G2				NSD							
G1	5	I2				NSD							
G1	6	J4				NSD							
G1	7	H4				NSD							
G1	8	F4				NSD							
G1	9	D4	AZQ	1		MD 1-0	5.7	3.8	1.5	Tremolite	Mg, Si, K, Ca, Fe		AS>5, 3:1

ItemType	ItemNum	Confirmed	Comment
Brightfield	J3416 BF		
Diffraction	J3416	KM 5/9/2007	ZONE AXIS [2 1 2]
Spectra	J2865		

Gr	No.	Loc.	ID	Prim	Tot	Class	Len	Wid	Asp	Analyte	Elements	Comment	Count Categories
G1	9	D4	AZQ		1	MF	4.4	0.5	8.8	Tremolite			
G1	10	B4				NSD							
G1	11	A7				NSD							
G1	12	C7	ADQ	2	2	F	3.1	0.75	4.1	Tremolite	Mg, Si, Ca, Fe		
G1	13	E7				NSD							
G1	14	G7				NSD							
G1	15	I7				NSD							
G1	16	J9				NSD							
G1	17	H9				NSD							
G1	18	F9	ADQ	3	3	F	4.5	0.65	6.9	Tremolite	Mg, Al, Si, Ca, Fe		
G1	19	D9				NSD							
G1	20	B9				NSD							
G2	21	A2	ADQ	4	4	F	15	1	15	Tremolite	Mg, Si, Ca, Fe		AS>5, 3:1, AFB>5, 3:1, PCMEF-US, PCMES-US, PCMEF-ISO, PCMES-ISO
G2	22	C2				NSD							
G2	23	E2				NSD							
G2	24	G2				NSD							
G2	25	I2				NSD							
G2	26	J4				NSD							

Count Categories

AFB>5, 3:1	Asbestos Fibers and Bundles > 5um and 3:1	AS>5, 3:1	Asbestos Structures >5um and 3:1
PAS	Primary Asbestos Structures	PCMEF-ISO	PCM Equivalent Fibers-ISO
PCMEF-US	PCM Equivalent Fibers-NIOSH	PCMES-ISO	PCM Equivalent Structures-ISO
PCMES-US	PCM Equivalent Structures-NIOSH	TAS	Total Asbestos Structures

Lab/Cor, Inc.
7619 6th Ave Nw
Seattle, WA 98117

Final Report

Phone: (206) 781-0155
Fax: (206) 789-8424
http://www.labcor.net

A Professional Service Corporation in the Northwest

ISO 10312, Direct Raw Data

Job Number: 070434 **SEA**
Client: Idaho National Laboratory
Project Name: RARE

Report Number: 070434R06
Date Received: 4/23/2007

Client Sample No: **FB-4-R4** Lab/Cor Sample No: **S15**
Client Description: **Date Sampled: 4/16/2007**

Gr	No.	Loc.	ID	Prim	Tot	Class	Len	Wid	Asp	Analyte	Elements	Comment	Count Categories
G2	27	H4				NSD							
G2	28	F4				NSD							
G2	29	D4				NSD							
G2	30	B4				NSD							
G2	31	A7				NSD							
G2	32	C7				NSD							
G2	33	E7				NSD							
G2	34	G7				NSD							
G2	35	I7				NSD							

Count Categories

AFB>5, 3:1	Asbestos Fibers and Bundles > 5um and 3:1	AS>5, 3:1	Asbestos Structures >5um and 3:1
PAS	Primary Asbestos Structures	PCMEF-ISO	PCM Equivalent Fibers-ISO
PCMEF-US	PCM Equivalent Fibers-NIOSH	PCMES-ISO	PCM Equivalent Structures-ISO
PCMES-US	PCM Equivalent Structures-NIOSH	TAS	Total Asbestos Structures

Lab/Cor, Inc.
7619 6th Ave Nw
Seattle, WA 98117

Final Report

Phone: (206) 781-0155
Fax: (206) 789-8424
http://www.labcor.net

A Professional Service Corporation in the Northwest

ISO 10312, Direct Raw Data

Job Number: 070434 **SEA**
Client: Idaho National Laboratory
Project Name: RARE

Report Number: 070434R06
Date Received: 4/23/2007

Client Sample No: **FB-4-R5** Lab/Cor Sample No: **S16**
Client Description: **Date Sampled: 4/16/2007**

Gr	No.	Loc.	ID	Prim	Tot	Class	Len	Wid	Asp	Analyte	Elements	Comment	Count Categories
G1	1	A2				NSD							
G1	2	C2				NSD							
G1	3	E2				NSD							
G1	4	G2				NSD							
G1	5	I2	AZQ	1		MD 1-1	6.7	4.85	1.4	Tremolite	Mg, Al, Si, Ca, Fe		AS>5, 3:1

ItemType	ItemNum	Confirmed	Comment
Brightfield	J3417 BF		
Diffraction	J3417	KM 5/9/2007	ZONE AXIS [5 1 2]
Spectra	J2866		

Gr	No.	Loc.	ID	Prim	Tot	Class	Len	Wid	Asp	Analyte	Elements	Comment	Count Categories
G1	5	I2	AZQ		1	MF	6.7	1.25	5.4	Tremolite			AFB>5, 3:1, PCMEF-US, PCMEF-ISO
G1	6	J4				NSD							
G1	7	H4				NSD							
G1	8	F4				NSD							
G1	9	D4	ADQ	2	2	F	17	1.35	12.6	Tremolite	Mg, Si, Ca, Fe		AS>5, 3:1, AFB>5, 3:1, PCMEF-US, PCMES-US, PCMEF-ISO, PCMES-ISO
G1	10	B4				NSD							
G1	11	A7				NSD							
G1	12	C7				NSD							
G1	13	E7				NSD							
G1	14	G7				NSD							
G1	15	I7				NSD							
G1	16	J9				NSD							
G1	17	H9				NSD							
G1	18	F9				NSD							
G1	19	D9				NSD							
G1	20	B9				NSD							
G2	21	A2				NSD							
G2	22	C2				NSD							
G2	23	E2	ADQ	3	3	B	7	1.5	4.7	Tremolite	Mg, Si, Ca, Fe		AFB>5, 3:1, AS>5, 3:1, PCMES-US, PCMEF-US, PCMES-ISO, PCMEF-ISO
G2	24	G2				NSD							
G2	25	I2				NSD							
G2	26	J4				NSD							

Count Categories

AFB>5, 3:1	Asbestos Fibers and Bundles > 5um and 3:1	AS>5, 3:1	Asbestos Structures >5um and 3:1
PAS	Primary Asbestos Structures	PCMEF-ISO	PCM Equivalent Fibers-ISO
PCMEF-US	PCM Equivalent Fibers-NIOSH	PCMES-ISO	PCM Equivalent Structures-ISO
PCMES-US	PCM Equivalent Structures-NIOSH	TAS	Total Asbestos Structures

Lab/Cor, Inc.
7619 6th Ave Nw
Seattle, WA 98117

Final Report

Phone: (206) 781-0155
Fax: (206) 789-8424
http://www.labcor.net

A Professional Service Corporation in the Northwest

ISO 10312, Direct Raw Data

Job Number: 070434 **SEA**
Client: Idaho National Laboratory
Project Name: RARE

Report Number: 070434R06
Date Received: 4/23/2007

Client Sample No: **FB-4-R5** Lab/Cor Sample No: **S16**
Client Description: **Date Sampled: 4/16/2007**

Gr	No.	Loc.	ID	Prim	Tot	Class	Len	Wid	Asp	Analyte	Elements	Comment	Count Categories
G2	27	H4	ADQ	4		MD 1-0	5.2	3.85	1.4	Tremolite	Mg, Si, Ca, Fe		AS>5, 3:1
G2	27	H4	ADQ		4	MF	4.5	1.2	3.7	Tremolite			
G2	28	F4	ADQ	5	5	F	3.3	0.45	7.3	Tremolite	Mg, Si, Ca, Fe		
G2	29	D4				NSD							
G2	30	B4				NSD							
G2	31	A7				NSD							
G2	32	C7				NSD							
G2	33	E7				NSD							
G2	34	G7				NSD							
G2	35	I7				NSD							

Count Categories

AFB>5, 3:1	Asbestos Fibers and Bundles > 5um and 3:1	AS>5, 3:1	Asbestos Structures >5um and 3:1
PAS	Primary Asbestos Structures	PCMEF-ISO	PCM Equivalent Fibers-ISO
PCMEF-US	PCM Equivalent Fibers-NIOSH	PCMES-ISO	PCM Equivalent Structures-ISO
PCMES-US	PCM Equivalent Structures-NIOSH	TAS	Total Asbestos Structures

Lab/Cor, Inc.
7619 6th Ave Nw
Seattle, WA 98117

Final Report

Phone: (206) 781-0155
Fax: (206) 789-8424
http://www.labcor.net

A Professional Service Corporation in the Northwest

ISO 10312, Direct Raw Data

Job Number: 070434 **SEA**
Client: Idaho National Laboratory
Project Name: RARE

Report Number: 070434R06
Date Received: 4/23/2007

Client Sample No: **FB-4-R6** Lab/Cor Sample No: **S17**
Client Description: **Date Sampled: 4/16/2007**

Gr	No.	Loc.	ID	Prim	Tot	Class	Len	Wid	Asp	Analyte	Elements	Comment	Count Categories
G1	1	B2	CDQ	1	1	B	3.25	0.15	21.7	Chrysotile	Mg, Si		

ItemType	ItemNum	Confirmed	Comment
Brightfield	J3428 BF		
Diffraction	J3428	KM 5/10/2007	
Spectra	J2880		

Gr	No.	Loc.	ID	Prim	Tot	Class	Len	Wid	Asp	Analyte	Elements	Comment	Count Categories
G1	2	C2	AZQ	2	2	F	1.75	0.4	4.4	Tremolite	Mg, Si, Ca		

ItemType	ItemNum	Confirmed	Comment
Brightfield	J3429 BF		
Diffraction	J3429	KM 5/10/2007	ZONE AXIS [1 0 0]
Spectra	J2881		

Gr	No.	Loc.	ID	Prim	Tot	Class	Len	Wid	Asp	Analyte	Elements	Comment	Count Categories
G1	3	E2				NSD						ON IT	
G1	4	G2				NSD							
G1	5	I2	ADQ	3	3	F	6.2	1	6.2	Tremolite	Mg, Si, Ca		AS>5, 3:1, AFB>5, 3:1, PCMEF-US, PCMES-US, PCMEF-ISO, PCMES-ISO
G1	6	J4	ADQ	4	4	F	4.6	0.75	6.1	Tremolite			
G1	6	J4	ADQ	5		MD 1-0	5.1	3.2	1.6	Tremolite	Mg, Si, Ca, Fe		AS>5, 3:1
G1	6	J4	ADQ		5	MF	2.75	0.85	3.2	Tremolite			
G1	7	H4	ADQ	6		MD 1-1	5.6	4	1.4	Tremolite	Mg, Si, Ca, Fe		AS>5, 3:1
G1	7	H4	ADQ		6	MF	5.6	1.1	5.1	Tremolite			AFB>5, 3:1, PCMEF-US, PCMEF-ISO
G1	8	F4				NSD							
G1	9	D4				NSD							
G1	10	B4				NSD							
G1	11	A7				NSD							
G1	12	C7				NSD							
G1	13	E7	ADQ	7	7	F	3.2	0.6	5.3	Tremolite			
G1	14	G7				NSD							
G1	15	I7				NSD							
G1	16	J9				NSD							
G1	17	H9				NSD							
G1	18	F9				NSD							
G1	19	D9				NSD							
G1	20	B9				NSD							
G2	21	A2				NSD							

Count Categories

AFB>5, 3:1	Asbestos Fibers and Bundles > 5um and 3:1	AS>5, 3:1	Asbestos Structures >5um and 3:1
PAS	Primary Asbestos Structures	PCMEF-ISO	PCM Equivalent Fibers-ISO
PCMEF-US	PCM Equivalent Fibers-NIOSH	PCMES-ISO	PCM Equivalent Structures-ISO
PCMES-US	PCM Equivalent Structures-NIOSH	TAS	Total Asbestos Structures

Lab/Cor, Inc.
7619 6th Ave Nw
Seattle, WA 98117

Final Report

Phone: (206) 781-0155
Fax: (206) 789-8424
http://www.labcor.net

A Professional Service Corporation in the Northwest

ISO 10312, Direct Raw Data

Job Number: 070434 **SEA**
Client: Idaho National Laboratory
Project Name: RARE

Report Number: 070434R06
Date Received: 4/23/2007

Client Sample No: **FB-4-R6** Lab/Cor Sample No: **S17**
Client Description: **Date Sampled: 4/16/2007**

Gr	No.	Loc.	ID	Prim	Tot	Class	Len	Wid	Asp	Analyte	Elements	Comment	Count Categories
G2	22	C2	ADQ	8	8	F	3.85	0.75	5.1	Tremolite	Mg, Si, Ca		
G2	23	E2				NSD							
G2	24	G2				NSD							
G2	25	I2				NSD							
G2	26	J4				NSD							
G2	27	H4				NSD							
G2	28	F4				NSD							
G2	29	D4				NSD							
G2	30	B4				NSD							
G2	31	A7				NSD							
G2	32	C7				NSD							
G2	33	E7				NSD							
G2	34	G7	ADQ	9	9	F	4.2	0.7	6	Tremolite	Mg, Si, Ca, Fe		
G2	35	I7	ADQ	10	10	F	3.75	0.85	4.4	Tremolite	Mg, Si, Ca, Fe		

Count Categories

AFB>5, 3:1	Asbestos Fibers and Bundles > 5um and 3:1	AS>5, 3:1	Asbestos Structures >5um and 3:1
PAS	Primary Asbestos Structures	PCMEF-ISO	PCM Equivalent Fibers-ISO
PCMEF-US	PCM Equivalent Fibers-NIOSH	PCMES-ISO	PCM Equivalent Structures-ISO
PCMES-US	PCM Equivalent Structures-NIOSH	TAS	Total Asbestos Structures

Lab/Cor, Inc.
7619 6th Ave Nw
Seattle, WA 98117

Final Report

Phone: (206) 781-0155
Fax: (206) 789-8424
http://www.labcor.net

A Professional Service Corporation in the Northwest

ISO 10312, Direct Raw Data

Job Number: 070434 **SEA**
Client: Idaho National Laboratory
Project Name: RARE

Report Number: 070434R06
Date Received: 4/23/2007

Client Sample No: **FB-4-R7** Lab/Cor Sample No: **S18**
Client Description: **Date Sampled: 4/16/2007**

Gr	No.	Loc.	ID	Prim	Tot	Class	Len	Wid	Asp	Analyte	Elements	Comment	Count Categories
G1	1	A2				NSD							
G1	2	C2				NSD							
G1	3	E2				NSD							
G1	4	G2				NSD							
G1	5	I2				NSD							
G1	6	J4				NSD							
G1	7	H4				NSD							
G1	8	F4				NSD							
G1	9	D4				NSD							
G1	10	B4				NSD							
G1	11	A7	AZQ	1	1	F	2	0.4	5	Tremolite	Mg, Si, Ca		

ItemType	ItemNum	Confirmed	Comment
Brightfield	J3430 BF		
Diffraction	J3430	KM 5/11/2007	ZONE AXIS [1 0 1]
Spectra	J2882		

Gr	No.	Loc.	ID	Prim	Tot	Class	Len	Wid	Asp	Analyte	Elements	Comment	Count Categories
G1	12	C7				NSD							
G1	13	E7				NSD							
G1	14	I7	ADQ	2	2	F	2.15	0.35	6.1	Tremolite	Mg, Si, Ca, Fe		
G1	15	G7				NSD							
G1	16	J9				NSD							
G1	17	H9				NSD							
G1	18	F9				NSD							
G1	19	D9				NSD							
G1	20	B9				NSD							
G2	21	A2				NSD							
G2	22	C2	ADQ	3		MD 1-0	5.2	2.5	2.1	Tremolite	Mg, Si, Ca, Fe		AS>5, 3:1
G2	22	C2	ADQ		3	MF	3.1	0.37	8.4	Tremolite			
G2	23	E2				NSD							
G2	24	G2				NSD							
G2	25	I2				NSD							
G2	26	J4				NSD							
G2	27	H4				NSD							
G2	28	F4				NSD							

Count Categories

AFB>5, 3:1	Asbestos Fibers and Bundles > 5um and 3:1	AS>5, 3:1	Asbestos Structures >5um and 3:1
PAS	Primary Asbestos Structures	PCMEF-ISO	PCM Equivalent Fibers-ISO
PCMEF-US	PCM Equivalent Fibers-NIOSH	PCMES-ISO	PCM Equivalent Structures-ISO
PCMES-US	PCM Equivalent Structures-NIOSH	TAS	Total Asbestos Structures

Lab/Cor, Inc.
7619 6th Ave Nw
Seattle, WA 98117

Final Report

Phone: (206) 781-0155
Fax: (206) 789-8424
http://www.labcor.net

A Professional Service Corporation in the Northwest

ISO 10312, Direct Raw Data

Job Number: 070434 **SEA**
Client: Idaho National Laboratory
Project Name: RARE

Report Number: 070434R06
Date Received: 4/23/2007

Client Sample No: **FB-4-R7** Lab/Cor Sample No: **S18**
Client Description: **Date Sampled: 4/16/2007**

Gr	No.	Loc.	ID	Prim	Tot	Class	Len	Wid	Asp	Analyte	Elements	Comment	Count Categories
G2	29	D4				NSD							
G2	30	B4				NSD							
G2	31	A7				NSD							
G2	32	C7				NSD							
G2	33	E7				NSD							
G2	34	G7				NSD							
G2	35	I7				NSD							

Count Categories

AFB>5, 3:1	Asbestos Fibers and Bundles > 5um and 3:1	AS>5, 3:1	Asbestos Structures >5um and 3:1
PAS	Primary Asbestos Structures	PCMEF-ISO	PCM Equivalent Fibers-ISO
PCMEF-US	PCM Equivalent Fibers-NIOSH	PCMES-ISO	PCM Equivalent Structures-ISO
PCMES-US	PCM Equivalent Structures-NIOSH	TAS	Total Asbestos Structures

Lab/Cor, Inc.
7619 6th Ave Nw
Seattle, WA 98117

Final Report

Phone: (206) 781-0155
Fax: (206) 789-8424
http://www.labcor.net

A Professional Service Corporation in the Northwest

ISO 10312, Direct Raw Data

Job Number: 070434 **SEA**
Client: Idaho National Laboratory
Project Name: RARE

Report Number: 070434R06
Date Received: 4/23/2007

Client Sample No: **FB-3-R1** Lab/Cor Sample No: **S19**
Client Description: **Date Sampled: 4/16/2007**

Gr	No.	Loc.	ID	Prim	Tot	Class	Len	Wid	Asp	Analyte	Elements	Comment	Count Categories
G1	1	A2				NSD							
G1	2	C2				NSD							
G1	3	G2				NSD							
G1	4	E2				NSD							
G1	5	I2				NSD							
G1	6	J4				NSD							
G1	7	H4				NSD							
G1	8	F4				NSD							
G1	9	D4				NSD							
G1	10	B4				NSD							
G1	11	A7				NSD							
G1	12	C7				NSD							
G1	13	E7				NSD							
G1	14	G7				NSD							
G1	15	I7				NSD							
G1	16	J9				NSD							
G1	17	H9				NSD							
G1	18	F9				NSD							
G1	19	D9				NSD							
G1	20	B9				NSD							
G2	21	A2				NSD							
G2	22	C2				NSD							
G2	23	E2				NSD							
G2	24	G2				NSD							
G2	25	I2				NSD							
G2	26	J4				NSD							
G2	27	H4				NSD							
G2	28	F4				NSD							
G2	29	D4				NSD							
G2	30	B4				NSD							
G2	31	A7				NSD							
G2	32	C7				NSD							
G2	33	E7				NSD							
G2	34	G7				NSD							

Count Categories

AFB>5, 3:1	Asbestos Fibers and Bundles > 5um and 3:1	AS>5, 3:1	Asbestos Structures >5um and 3:1
PAS	Primary Asbestos Structures	PCMEF-ISO	PCM Equivalent Fibers-ISO
PCMEF-US	PCM Equivalent Fibers-NIOSH	PCMES-ISO	PCM Equivalent Structures-ISO
PCMES-US	PCM Equivalent Structures-NIOSH	TAS	Total Asbestos Structures

Lab/Cor, Inc.
7619 6th Ave Nw
Seattle, WA 98117

Final Report

Phone: (206) 781-0155
Fax: (206) 789-8424
http://www.labcor.net

A Professional Service Corporation in the Northwest

ISO 10312, Direct Raw Data

Job Number: 070434 **SEA**
Client: Idaho National Laboratory
Project Name: RARE

Report Number: 070434R06
Date Received: 4/23/2007

Client Sample No: **FB-3-R1** Lab/Cor Sample No: **S19**
Client Description: **Date Sampled: 4/16/2007**

Gr	No.	Loc.	ID	Prim	Tot	Class	Len	Wid	Asp	Analyte	Elements	Comment	Count Categories
G2	35	I7				NSD							

Count Categories

AFB>5, 3:1	Asbestos Fibers and Bundles > 5um and 3:1	AS>5, 3:1	Asbestos Structures >5um and 3:1
PAS	Primary Asbestos Structures	PCMEF-ISO	PCM Equivalent Fibers-ISO
PCMEF-US	PCM Equivalent Fibers-NIOSH	PCMES-ISO	PCM Equivalent Structures-ISO
PCMES-US	PCM Equivalent Structures-NIOSH	TAS	Total Asbestos Structures

Lab/Cor, Inc.
7619 6th Ave Nw
Seattle, WA 98117

Final Report

Phone: (206) 781-0155
Fax: (206) 789-8424
http://www.labcor.net

A Professional Service Corporation in the Northwest

ISO 10312, Direct Raw Data

Job Number: 070434 **SEA**
Client: Idaho National Laboratory
Project Name: RARE

Report Number: 070434R06
Date Received: 4/23/2007

Client Sample No: **FB-3-R2** Lab/Cor Sample No: **S20**
Client Description: **Date Sampled: 4/16/2007**

Gr	No.	Loc.	ID	Prim	Tot	Class	Len	Wid	Asp	Analyte	Elements	Comment	Count Categories
G1	1	A2	AZQ	1	1	F	4	0.45	8.9	Tremolite	Mg, Si, Ca		
						ItemType	ItemNum				Confirmed	Comment	
						Brightfield	J3469 BF						
						Diffraction	J3469				KM 5/17/2007	ZONE AXIS [3 1 2]	
						Spectra	J2921						
G1	2	C2	ADQ	2	2	F	19.2	1.7	11.3	Tremolite	Mg, Si, Ca		AS>5, 3:1, AFB>5, 3:1, PCMEF-US, PCMES-US, PCMEF-ISO, PCMES-ISO
						ItemType	ItemNum				Confirmed	Comment	
						Brightfield	J3470 BF						
						Spectra	J2922						
G1	3	E2	AD	3		MD 1-0	5	4.8	1	Tremolite			
G1	3	E2	AD		3	MF	1.45	0.22	6.6	Tremolite			
G1	4	G2				NSD							
G1	5	I2	AQ	4		MD 1-1	10	4.5	2.2	Tremolite	Mg, Si, Ca		AS>5, 3:1
G1	5	I2	AQ		4	MF	7.85	1.1	7.1	Tremolite			AFB>5, 3:1, PCMEF-US, PCMEF-ISO
G1	5	I2	AQ	5	5	F	9.2	0.5	18.4	Tremolite			AS>5, 3:1, AFB>5, 3:1, PCMEF-US, PCMES-US, PCMEF-ISO, PCMES-ISO
G1	5	I2	AQ	6	6	F	2.8	0.65	4.3	Tremolite			
G1	5	I2	AQ	7	7	F	7.5	1.1	6.8	Tremolite			AS>5, 3:1, AFB>5, 3:1, PCMEF-US, PCMES-US, PCMEF-ISO, PCMES-ISO
G1	6	H4	AQ	8	8	F	5	1.5	3.3	Tremolite			
G1	7	J4				NSD							
G1	8	F4	AQ	9	9	F	2.2	0.7	3.1	Tremolite			
G1	8	F4	AQ	10	10	B	12	2	6	Tremolite			AFB>5, 3:1, AS>5, 3:1, PCMES-US, PCMEF-US, PCMES-ISO, PCMEF-ISO
						ItemType	ItemNum				Confirmed	Comment	
						Brightfield	J3471 BF						
G1	9	D4				NSD							
G1	10	B4	AQ	11	11	F	3	0.3	10	Tremolite			
G1	10	B4	AQ	12	12	F	3	0.8	3.8	Tremolite			
G1	11	A7				NSD							
G1	12	C7	AQ	13	13	F	6	1.7	3.5	Tremolite			PCMEF-US, PCMES-US, PCMEF-ISO, PCMES-ISO

Count Categories

AFB>5, 3:1	Asbestos Fibers and Bundles > 5um and 3:1	AS>5, 3:1	Asbestos Structures >5um and 3:1
PAS	Primary Asbestos Structures	PCMEF-ISO	PCM Equivalent Fibers-ISO
PCMEF-US	PCM Equivalent Fibers-NIOSH	PCMES-ISO	PCM Equivalent Structures-ISO
PCMES-US	PCM Equivalent Structures-NIOSH	TAS	Total Asbestos Structures

Lab/Cor, Inc.
7619 6th Ave Nw
Seattle, WA 98117

Final Report

Phone: (206) 781-0155
Fax: (206) 789-8424
http://www.labcor.net

A Professional Service Corporation in the Northwest

ISO 10312, Direct Raw Data

Job Number: 070434 **SEA**
Client: Idaho National Laboratory
Project Name: RARE

Report Number: 070434R06
Date Received: 4/23/2007

Client Sample No: **FB-3-R2** Lab/Cor Sample No: **S20**
Client Description: **Date Sampled: 4/16/2007**

Gr	No.	Loc.	ID	Prim	Tot	Class	Len	Wid	Asp	Analyte	Elements	Comment	Count Categories
G1	12	C7	AQ	14	14	F	7	1.35	5.2	Tremolite			AS>5, 3:1, AFB>5, 3:1, PCMEF-US, PCMES-US, PCMEF-ISO, PCMES-ISO
G1	13	E7	AQ	15	15	F	3.2	0.65	4.9	Tremolite			
G1	14	G7	AQ	16	16	F	36	1.5	24	Tremolite			AS>5, 3:1, AFB>5, 3:1, PCMEF-US, PCMES-US, PCMEF-ISO, PCMES-ISO
G1	14	G7	AQ	17	17	F	6.5	2	3.2	Tremolite			PCMEF-US, PCMES-US, PCMEF-ISO, PCMES-ISO
G1	14	G7	AQ	18	18	F	15.85	1.5	10.6	Tremolite			AFB>5, 3:1, AS>5, 3:1, PCMEF-US, PCMES-US, PCMEF-ISO, PCMES-ISO
G1	15	I7				NSD							
G1	16	J9	AQ	19		MD 2-1	20	12	1.7	Tremolite	Mg, Si, Ca		AS>5, 3:1

ItemType	ItemNum	Confirmed	Comment
Brightfield	J3472 BF		

G1	16	J9	AQ		19	MF	5.8	1.35	4.3	Tremolite			PCMEF-US, PCMEF-ISO
G1	16	J9	AQ		20	MF	4.1	0.85	4.8	Tremolite			
G1	17	H9	AQ	20	21	F	4.5	1.2	3.7	Tremolite			
G1	17	H9	AQ	21	22	F	9.15	0.65	14.1	Tremolite			AS>5, 3:1, AFB>5, 3:1, PCMES-US, PCMEF-US, PCMEF-ISO, PCMES-ISO
G1	18	F9	AQ	22	23	F	6.2	0.8	7.7	Tremolite			AS>5, 3:1, AFB>5, 3:1, PCMEF-US, PCMES-US, PCMEF-ISO, PCMES-ISO
G1	18	F9	AQ	23	24	F	5.5	1.25	4.4	Tremolite			PCMEF-US, PCMES-US, PCMEF-ISO, PCMES-ISO
G1	18	F9	AQ	24	25	F	1.75	0.45	3.9	Tremolite			
G1	19	D9	AQ	25	26	F	2.8	0.8	3.5	Tremolite			
G1	19	D9	AQ	26		MD 1-1	8.5	5.5	1.5	Tremolite	Mg, Al, Si, Ca, Fe		AS>5, 3:1

ItemType	ItemNum	Confirmed	Comment
Brightfield	J3473 BF		
Spectra	J2923		

G1	19	D9	AQ		27	MF	7	0.15	46.7	Tremolite			AFB>5, 3:1
G1	19	D9	AQ	27	28	F	4.5	1.2	3.7	Tremolite			
G1	20	B9	AQ	28	29	F	4.45	0.7	6.4	Tremolite			
G2	21	A2	AQ	29	30	F	19.2	1.15	16.7	Tremolite			AS>5, 3:1, AFB>5, 3:1, PCMEF-US, PCMES-US, PCMEF-ISO, PCMES-ISO
G2	21	A2	AQ	30	31	F	2.25	0.15	15	Tremolite			

Count Categories

AFB>5, 3:1	Asbestos Fibers and Bundles > 5um and 3:1	AS>5, 3:1	Asbestos Structures >5um and 3:1
PAS	Primary Asbestos Structures	PCMEF-ISO	PCM Equivalent Fibers-ISO
PCMEF-US	PCM Equivalent Fibers-NIOSH	PCMES-ISO	PCM Equivalent Structures-ISO
PCMES-US	PCM Equivalent Structures-NIOSH	TAS	Total Asbestos Structures

Lab/Cor, Inc.
7619 6th Ave Nw
Seattle, WA 98117

Final Report

Phone: (206) 781-0155
Fax: (206) 789-8424
http://www.labcor.net

A Professional Service Corporation in the Northwest

ISO 10312, Direct Raw Data

Job Number: 070434 **SEA**
Client: Idaho National Laboratory
Project Name: RARE

Report Number: 070434R06
Date Received: 4/23/2007

Client Sample No: **FB-3-R2** Lab/Cor Sample No: **S20**
Client Description: **Date Sampled: 4/16/2007**

Gr	No.	Loc.	ID	Prim	Tot	Class	Len	Wid	Asp	Analyte	Elements	Comment	Count Categories
G2	22	C2	AQ	31	32	F	3.15	0.35	9	Tremolite			
G2	22	C2	AQ	32	33	F	3.5	0.5	7	Tremolite			
G2	23	E2	AQ	33	34	F	4	0.6	6.7	Tremolite			
G2	24	G2	AQ	34	35	F	25	2.75	9.1	Tremolite			AS>5, 3:1, AFB>5, 3:1, PCMEF-US, PCMES-US, PCMEF-ISO, PCMES-ISO
G2	24	G2	AQ	35	36	F	3.5	1.15	3	Tremolite			
G2	25	I2	AQ	36	37	F	4.2	1	4.2	Tremolite			
G2	25	I2	AQ	37	38	F	3.15	0.6	5.2	Tremolite			
G2	26	J4	AQ	38		MD 1-0	6.85	4.2	1.6	Tremolite			AS>5, 3:1
G2	26	J4	AQ		39	MF	3.35	0.45	7.4	Tremolite			
G2	27	H4	AQ	39	40	F	2.12	0.4	5.3	Tremolite			
G2	28	F4	AQ	40	41	F	6.5	0.95	6.8	Tremolite			AS>5, 3:1, AFB>5, 3:1, PCMEF-US, PCMES-US, PCMEF-ISO, PCMES-ISO
G2	28	F4	AQ	41	42	F	4.6	1.35	3.4	Tremolite			
G2	28	F4	AQ	42		MD 1-1	8	4.5	1.8	Tremolite	Mg, Si, Ca, Fe		AS>5, 3:1

ItemType	ItemNum	Confirmed	Comment
Brightfield	J3474 BF		

Gr	No.	Loc.	ID	Prim	Tot	Class	Len	Wid	Asp	Analyte	Elements	Comment	Count Categories
G2	28	F4	AQ		43	MF	6.75	0.75	9	Tremolite			AFB>5, 3:1, PCMEF-US, PCMEF-ISO
G2	29	D4	AQ	43		MD 2-1	30	23.5	1.3	Tremolite	Mg, Si, Ca, Fe		AS>5, 3:1

ItemType	ItemNum	Confirmed	Comment
Brightfield	J3475 BF		

Gr	No.	Loc.	ID	Prim	Tot	Class	Len	Wid	Asp	Analyte	Elements	Comment	Count Categories
G2	29	D4	AQ		44	MF	24.5	0.5	49	Tremolite			AFB>5, 3:1, PCMEF-US, PCMEF-ISO
G2	29	D4	AQ		45	MF	2.12	0.2	10.6	Tremolite			
G2	30	B4	AQ	44	46	F	2.85	0.75	3.8	Tremolite			
G2	31	A7	AQ	45	47	F	8	1.5	5.3	Tremolite			AS>5, 3:1, AFB>5, 3:1, PCMEF-US, PCMES-US, PCMEF-ISO, PCMES-ISO
G2	31	A7	AQ	46	48	F	5.8	0.75	7.7	Tremolite			AS>5, 3:1, AFB>5, 3:1, PCMEF-US, PCMES-US, PCMEF-ISO, PCMES-ISO
G2	31	A7	AQ	47	49	F	5.4	1.2	4.5	Tremolite			PCMEF-US, PCMES-US, PCMEF-ISO, PCMES-ISO
G2	32	C7	AQ	48	50	F	5	1.5	3.3	Tremolite			
G2	33	E7	AQ	49	51	F	13	3	4.3	Tremolite			PCMEF-US, PCMES-US, PCMEF-ISO, PCMES-ISO

Count Categories

AFB>5, 3:1	Asbestos Fibers and Bundles > 5um and 3:1	AS>5, 3:1	Asbestos Structures >5um and 3:1
PAS	Primary Asbestos Structures	PCMEF-ISO	PCM Equivalent Fibers-ISO
PCMEF-US	PCM Equivalent Fibers-NIOSH	PCMES-ISO	PCM Equivalent Structures-ISO
PCMES-US	PCM Equivalent Structures-NIOSH	TAS	Total Asbestos Structures

Lab/Cor, Inc.
7619 6th Ave Nw
Seattle, WA 98117

Final Report

Phone: (206) 781-0155
Fax: (206) 789-8424
http://www.labcor.net

A Professional Service Corporation in the Northwest

ISO 10312, Direct Raw Data

Job Number: 070434 **SEA**
Client: Idaho National Laboratory
Project Name: RARE

Report Number: 070434R06
Date Received: 4/23/2007

Client Sample No: **FB-3-R2** Lab/Cor Sample No: **S20**
Client Description: **Date Sampled: 4/16/2007**

Gr	No.	Loc.	ID	Prim	Tot	Class	Len	Wid	Asp	Analyte	Elements	Comment	Count Categories
G2	33	E7	AQ	50	52	F	5.7	0.45	12.7	Tremolite			AS>5, 3:1, AFB>5, 3:1, PCMEF-US, PCMES-US, PCMEF-ISO, PCMES-ISO
G2	34	G7	AQ	51		MD 2-2	30	20	1.5	Tremolite			AS>5, 3:1
						ItemType	ItemNum				Confirmed	Comment	
						Brightfield	J3476 BF						
G2	34	G7	AQ		53	MF	15	0.5	30	Tremolite			AFB>5, 3:1, PCMEF-US, PCMEF-ISO
G2	34	G7	AQ		54	MF	10	0.55	18.2	Tremolite			AFB>5, 3:1, PCMEF-US, PCMEF-ISO
G2	35	I7	AQ	52		MD 1-0	6.5	5.8	1.1	Tremolite			AS>5, 3:1
						ItemType	ItemNum				Confirmed	Comment	
						Brightfield	J3477 BF						
G2	35	I7	AQ		55	MF	2.3	0.4	5.8	Tremolite			
G2	35	I7	AQ	53	56	F	19	1.45	13.1	Tremolite			AS>5, 3:1, AFB>5, 3:1, PCMES-US, PCMEF-US, PCMES-ISO, PCMEF-ISO

Count Categories

AFB>5, 3:1	Asbestos Fibers and Bundles > 5um and 3:1	AS>5, 3:1	Asbestos Structures >5um and 3:1
PAS	Primary Asbestos Structures	PCMEF-ISO	PCM Equivalent Fibers-ISO
PCMEF-US	PCM Equivalent Fibers-NIOSH	PCMES-ISO	PCM Equivalent Structures-ISO
PCMES-US	PCM Equivalent Structures-NIOSH	TAS	Total Asbestos Structures

Lab/Cor, Inc.
7619 6th Ave Nw
Seattle, WA 98117

Final Report

Phone: (206) 781-0155
Fax: (206) 789-8424
http://www.labcor.net

A Professional Service Corporation in the Northwest

ISO 10312, Direct Raw Data

Job Number: 070434 **SEA**
Client: Idaho National Laboratory
Project Name: RARE

Report Number: 070434R06
Date Received: 4/23/2007

Client Sample No: **FB-3-R3** Lab/Cor Sample No: **S21**
Client Description: **Date Sampled: 4/16/2007**

Gr	No.	Loc.	ID	Prim	Tot	Class	Len	Wid	Asp	Analyte	Elements	Comment	Count Categories
G1	1	A2				NSD							
G1	2	C2				NSD							
G1	3	E2				NSD							
G1	4	G2				NSD							
G1	5	I2				NSD							
G1	6	J4				NSD							
G1	7	H4				NSD							
G1	8	F4				NSD							
G1	9	D4				NSD							
G1	10	B4				NSD							
G1	11	A7				NSD							
G1	12	C7				NSD							
G1	13	E7				NSD							
G1	14	G7				NSD							
G1	15	I7				NSD							
G1	16	J9				NSD							
G1	17	H9				NSD							
G1	18	F9				NSD							
G1	19	D9				NSD							
G1	20	B9				NSD							
G2	21	A2				NSD							
G2	22	C2				NSD							
G2	23	E2				NSD							
G2	24	G2				NSD							
G2	25	I2				NSD							
G2	26	J4				NSD							
G2	27	H4				NSD							
G2	28	F4				NSD							
G2	29	D4				NSD							
G2	30	B4				NSD							
G2	31	A7				NSD							
G2	32	C7				NSD							
G2	33	E7				NSD							
G2	34	G7				NSD							

Count Categories

AFB>5, 3:1	Asbestos Fibers and Bundles > 5um and 3:1	AS>5, 3:1	Asbestos Structures >5um and 3:1
PAS	Primary Asbestos Structures	PCMEF-ISO	PCM Equivalent Fibers-ISO
PCMEF-US	PCM Equivalent Fibers-NIOSH	PCMES-ISO	PCM Equivalent Structures-ISO
PCMES-US	PCM Equivalent Structures-NIOSH	TAS	Total Asbestos Structures

Lab/Cor, Inc.
7619 6th Ave Nw
Seattle, WA 98117

Final Report

Phone: (206) 781-0155
Fax: (206) 789-8424
http://www.labcor.net

A Professional Service Corporation in the Northwest

ISO 10312, Direct Raw Data

Job Number: 070434 **SEA**
Client: Idaho National Laboratory
Project Name: RARE

Report Number: 070434R06
Date Received: 4/23/2007

Client Sample No: **FB-3-R3** Lab/Cor Sample No: **S21**
Client Description: **Date Sampled: 4/16/2007**

Gr	No.	Loc.	ID	Prim	Tot	Class	Len	Wid	Asp	Analyte	Elements	Comment	Count Categories
G2	35	I7				NSD							

Count Categories

AFB>5, 3:1	Asbestos Fibers and Bundles > 5um and 3:1	AS>5, 3:1	Asbestos Structures >5um and 3:1
PAS	Primary Asbestos Structures	PCMEF-ISO	PCM Equivalent Fibers-ISO
PCMEF-US	PCM Equivalent Fibers-NIOSH	PCMES-ISO	PCM Equivalent Structures-ISO
PCMES-US	PCM Equivalent Structures-NIOSH	TAS	Total Asbestos Structures

Lab/Cor, Inc.
7619 6th Ave Nw
Seattle, WA 98117

Final Report

Phone: (206) 781-0155
Fax: (206) 789-8424
http://www.labcor.net

A Professional Service Corporation in the Northwest

ISO 10312, Direct Raw Data

Job Number: 070434 **SEA**
Client: Idaho National Laboratory
Project Name: RARE

Report Number: 070434R06
Date Received: 4/23/2007

Client Sample No: **FB-3-R4** Lab/Cor Sample No: **S22**
Client Description: **Date Sampled: 4/16/2007**

Gr	No.	Loc.	ID	Prim	Tot	Class	Len	Wid	Asp	Analyte	Elements	Comment	Count Categories
G1	1	A2				NSD							
G1	2	C2				NSD							
G1	3	E2				NSD							
G1	4	G2				NSD							
G1	5	I2				NSD							
G1	6	J4				NSD							
G1	7	H4				NSD							
G1	8	F4				NSD							
G1	9	D4				NSD							
G1	10	B4				NSD							
G1	11	A7				NSD							
G1	12	C7				NSD							
G1	13	E7				NSD							
G1	14	G7				NSD							
G1	15	I7				NSD							
G1	16	J9				NSD							
G1	17	H9				NSD							
G1	18	F9				NSD							
G1	19	D9				NSD							
G1	20	B9				NSD							
G2	21	A2				NSD							
G2	22	C2				NSD							
G2	23	E2				NSD							
G2	24	G2				NSD							
G2	25	I2				NSD							
G2	26	J4				NSD							
G2	27	H4				NSD							
G2	28	F4				NSD							
G2	29	D4				NSD							
G2	30	B4				NSD							
G2	31	A7				NSD							
G2	32	C7				NSD							
G2	33	E7				NSD							
G2	34	G7				NSD							

Count Categories

AFB>5, 3:1	Asbestos Fibers and Bundles > 5um and 3:1	AS>5, 3:1	Asbestos Structures >5um and 3:1
PAS	Primary Asbestos Structures	PCMEF-ISO	PCM Equivalent Fibers-ISO
PCMEF-US	PCM Equivalent Fibers-NIOSH	PCMES-ISO	PCM Equivalent Structures-ISO
PCMES-US	PCM Equivalent Structures-NIOSH	TAS	Total Asbestos Structures

Lab/Cor, Inc.
7619 6th Ave Nw
Seattle, WA 98117

Final Report

Phone: (206) 781-0155
Fax: (206) 789-8424
http://www.labcor.net

A Professional Service Corporation in the Northwest

ISO 10312, Direct Raw Data

Job Number: 070434 **SEA**
Client: Idaho National Laboratory
Project Name: RARE

Report Number: 070434R06
Date Received: 4/23/2007

Client Sample No: **FB-3-R4** Lab/Cor Sample No: **S22**
Client Description: **Date Sampled: 4/16/2007**

Gr	No.	Loc.	ID	Prim	Tot	Class	Len	Wid	Asp	Analyte	Elements	Comment	Count Categories
G2	35	I7				NSD							

Count Categories

AFB>5, 3:1	Asbestos Fibers and Bundles > 5um and 3:1	AS>5, 3:1	Asbestos Structures >5um and 3:1
PAS	Primary Asbestos Structures	PCMEF-ISO	PCM Equivalent Fibers-ISO
PCMEF-US	PCM Equivalent Fibers-NIOSH	PCMES-ISO	PCM Equivalent Structures-ISO
PCMES-US	PCM Equivalent Structures-NIOSH	TAS	Total Asbestos Structures

Lab/Cor, Inc.
7619 6th Ave Nw
Seattle, WA 98117

Final Report

Phone: (206) 781-0155
Fax: (206) 789-8424
http://www.labcor.net

A Professional Service Corporation in the Northwest

ISO 10312, Direct Raw Data

Job Number: 070434 **SEA**
Client: Idaho National Laboratory
Project Name: RARE

Report Number: 070434R06
Date Received: 4/23/2007

Client Sample No: **FB-3-R5** Lab/Cor Sample No: **S23**
Client Description: **Date Sampled: 4/16/2007**

Gr	No.	Loc.	ID	Prim	Tot	Class	Len	Wid	Asp	Analyte	Elements	Comment	Count Categories
G1	1	A2				NSD							
G1	2	C2				NSD							
G1	3	E2				NSD							
G1	4	G2	AZQ	1	1	F	10	0.85	11.8	Tremolite	Mg, Al, Si, Ca, Fe		AS>5, 3:1, AFB>5, 3:1, PCMEF-US, PCMES-US, PCMEF-ISO, PCMES-ISO

ItemType	ItemNum	Confirmed	Comment
Brightfield	J3505 BF		
Diffraction	J3505	KM 5/22/2007	ZONE AXIS [7 1 6]
Spectra	J2950		

Gr	No.	Loc.	ID	Prim	Tot	Class	Len	Wid	Asp	Analyte	Elements	Comment	Count Categories
G1	4	G2	AQ	2	2	F	4.25	0.45	9.4	Tremolite	Mg, Al, Si, Ca, Fe		

ItemType	ItemNum	Confirmed	Comment
Brightfield	J3505 BF		

Gr	No.	Loc.	ID	Prim	Tot	Class	Len	Wid	Asp	Analyte	Elements	Comment	Count Categories
G1	4	G2	ADQ	3		MD 1-1	7	1.75	4	Tremolite	Mg, Al, Si, Ca, Fe		AS>5, 3:1, PCMES-US, PCMES-ISO

ItemType	ItemNum	Confirmed	Comment
Brightfield	J3506 BF		
Diffraction	J3506	KM 5/22/2007	5.3A IMAGE
Spectra	J2951		

Gr	No.	Loc.	ID	Prim	Tot	Class	Len	Wid	Asp	Analyte	Elements	Comment	Count Categories
G1	4	G2	ADQ		3	MF	7	0.5	14	Tremolite			AFB>5, 3:1, PCMEF-US, PCMEF-ISO
G1	5	I2	AQ	4	4	F	7.75	1.15	6.7	Tremolite	Mg, Al, Si, Ca, Fe		AS>5, 3:1, AFB>5, 3:1, PCMEF-US, PCMES-US, PCMEF-ISO, PCMES-ISO
G1	6	J4				NSD							
G1	7	H4				NSD							
G1	8	F4	AQ	5	5	F	23.5	1.85	12.7	Tremolite	Mg, Al, Si, Ca, Fe		AS>5, 3:1, AFB>5, 3:1, PCMEF-US, PCMES-US, PCMEF-ISO, PCMES-ISO
G1	8	F4	AQ	6	6	F	4.35	0.65	6.7	Tremolite	Mg, Al, Si, Ca, Fe		
G1	9	B4	AQ	7		MD 1-1	17.75	4.5	3.9	Tremolite	Mg, Al, Si, Ca, Fe		AS>5, 3:1, PCMES-US
G1	9	B4	AQ		7	MF	17.75	1.7	10.4	Tremolite			AFB>5, 3:1, PCMEF-US, PCMEF-ISO

Count Categories

AFB>5, 3:1	Asbestos Fibers and Bundles > 5um and 3:1	AS>5, 3:1	Asbestos Structures >5um and 3:1
PAS	Primary Asbestos Structures	PCMEF-ISO	PCM Equivalent Fibers-ISO
PCMEF-US	PCM Equivalent Fibers-NIOSH	PCMES-ISO	PCM Equivalent Structures-ISO
PCMES-US	PCM Equivalent Structures-NIOSH	TAS	Total Asbestos Structures

Lab/Cor, Inc.
7619 6th Ave Nw
Seattle, WA 98117

Final Report

Phone: (206) 781-0155
Fax: (206) 789-8424
http://www.labcor.net

A Professional Service Corporation in the Northwest

ISO 10312, Direct Raw Data

Job Number: 070434 **SEA**
Client: Idaho National Laboratory
Project Name: RARE

Report Number: 070434R06
Date Received: 4/23/2007

Client Sample No: **FB-3-R5** Lab/Cor Sample No: **S23**
Client Description: **Date Sampled: 4/16/2007**

Gr	No.	Loc.	ID	Prim	Tot	Class	Len	Wid	Asp	Analyte	Elements	Comment	Count Categories
G1	9	B4	AQ	8		MD 1-1	13.75	7	2	Tremolite	Mg, Al, Si, Ca, Fe		AS>5, 3:1

ItemType	ItemNum	Confirmed	Comment
Brightfield	J3507 BF		
Spectra	J2952		

G1	9	B4	AQ		8	MF	13.75	0.25	55	Tremolite			AFB>5, 3:1, PCMEF-US, PCMEF-ISO
G1	10	D4				NSD							
G1	11	A7	AQ	9	9	F	2.65	0.38	7	Tremolite	Mg, Al, Si, Ca, Fe		
G1	12	C7	AQ	10	10	F	4	0.65	6.2	Tremolite	Mg, Si, Ca, Fe		
G1	13	E7				NSD							
G1	14	G7	AQ	11	11	F	23	5	4.6	Tremolite	Mg, Si, Ca, Fe		PCMEF-US, PCMES-US
G1	15	I7	AQ	12	12	F	6	0.9	6.7	Tremolite	Mg, Si, Ca, Fe		AS>5, 3:1, AFB>5, 3:1, PCMEF-US, PCMES-US, PCMEF-ISO, PCMES-ISO
G1	15	I7	AQ	13	13	F	7.5	0.7	10.7	Tremolite	Mg, Si, Ca, Fe		AS>5, 3:1, AFB>5, 3:1, PCMEF-US, PCMES-US, PCMEF-ISO, PCMES-ISO
G1	16	J9				NSD							
G1	17	H9	AQ	14	14	F	5.5	0.35	15.7	Tremolite	Mg, Al, Si, Ca, Fe		AS>5, 3:1, AFB>5, 3:1, PCMEF-US, PCMES-US, PCMEF-ISO, PCMES-ISO
G1	18	F9	AQ	15	15	F	13	0.5	26	Tremolite	Mg, Al, Si, Ca, Fe		AFB>5, 3:1, AS>5, 3:1, PCMEF-US, PCMES-US, PCMEF-ISO, PCMES-ISO

ItemType	ItemNum	Confirmed	Comment
Spectra	J2953		

G1	18	F9	AQ	16		MD 1-0	7.5	5.8	1.3	Tremolite			AS>5, 3:1
G1	18	F9	AQ		16	MF	4.2	0.5	8.4	Tremolite			
G1	18	F9	AQ	17		MD 1-0	5.2	3	1.7	Tremolite			AS>5, 3:1
G1	18	F9	AQ		17	MF	3.2	0.15	21.3	Tremolite			
G1	19	D9				NSD							
G1	20	B9				NSD							
G2	21	A2				NSD							
G2	22	C2	ADQ	18	18	F	4.35	0.65	6.7	Tremolite	Mg, Al, Si, Ca, Fe		
G2	23	E2	AQ	19	19	F	14.5	3	4.8	Tremolite			PCMEF-US, PCMES-US, PCMEF-ISO, PCMES-ISO

Count Categories

AFB>5, 3:1	Asbestos Fibers and Bundles > 5um and 3:1	AS>5, 3:1	Asbestos Structures >5um and 3:1
PAS	Primary Asbestos Structures	PCMEF-ISO	PCM Equivalent Fibers-ISO
PCMEF-US	PCM Equivalent Fibers-NIOSH	PCMES-ISO	PCM Equivalent Structures-ISO
PCMES-US	PCM Equivalent Structures-NIOSH	TAS	Total Asbestos Structures

Lab/Cor, Inc.
7619 6th Ave Nw
Seattle, WA 98117

Final Report

Phone: (206) 781-0155
Fax: (206) 789-8424
http://www.labcor.net

A Professional Service Corporation in the Northwest

ISO 10312, Direct Raw Data

Job Number: 070434 **SEA**
Client: Idaho National Laboratory
Project Name: RARE

Report Number: 070434R06
Date Received: 4/23/2007

Client Sample No: **FB-3-R5** Lab/Cor Sample No: **S23**
Client Description: **Date Sampled: 4/16/2007**

Gr	No.	Loc.	ID	Prim	Tot	Class	Len	Wid	Asp	Analyte	Elements	Comment	Count Categories
G2	24	G2	ADQ	20	20	F	7	0.5	14	Tremolite			AS>5, 3:1, AFB>5, 3:1, PCMEF-US, PCMES-US, PCMEF-ISO, PCMES-ISO
G2	25	I2				NSD							
G2	26	J4				NSD							
G2	27	H4				NSD							
G2	28	F4				NSD							
G2	29	D4				NSD							
G2	30	B4	AQ	21	21	F	13.25	3	4.4	Tremolite			PCMEF-US, PCMES-US, PCMEF-ISO, PCMES-ISO
G2	31	A7				NSD							
G2	32	C7	AQ	22	22	B	6.2	1.75	3.5	Tremolite	Mg, Al, Si, Ca, Fe		AFB>5, 3:1, AS>5, 3:1, PCMES-US, PCMEF-US, PCMES-ISO, PCMEF-ISO

ItemType	ItemNum	Confirmed	Comment
Brightfield	J3508 BF		

Gr	No.	Loc.	ID	Prim	Tot	Class	Len	Wid	Asp	Analyte	Elements	Comment	Count Categories
G2	33	E7				NSD							
G2	34	G7	AQ	23	23	F	5.5	0.75	7.3	Tremolite			AS>5, 3:1, AFB>5, 3:1, PCMEF-US, PCMES-US, PCMEF-ISO, PCMES-ISO
G2	34	G7	AQ	24	24	F	25	1	25	Tremolite			AS>5, 3:1, AFB>5, 3:1, PCMEF-US, PCMES-US, PCMEF-ISO, PCMES-ISO
G2	35	I7				NSD							

Count Categories

AFB>5, 3:1	Asbestos Fibers and Bundles > 5um and 3:1	AS>5, 3:1	Asbestos Structures >5um and 3:1
PAS	Primary Asbestos Structures	PCMEF-ISO	PCM Equivalent Fibers-ISO
PCMEF-US	PCM Equivalent Fibers-NIOSH	PCMES-ISO	PCM Equivalent Structures-ISO
PCMES-US	PCM Equivalent Structures-NIOSH	TAS	Total Asbestos Structures

Lab/Cor, Inc.
7619 6th Ave Nw
Seattle, WA 98117

Final Report

Phone: (206) 781-0155
Fax: (206) 789-8424
http://www.labcor.net

A Professional Service Corporation in the Northwest

ISO 10312, Direct Raw Data

Job Number: 070434 **SEA**
Client: Idaho National Laboratory
Project Name: RARE

Report Number: 070434R06
Date Received: 4/23/2007

Client Sample No: **FB-3-R6** Lab/Cor Sample No: **S24**
Client Description: **Date Sampled: 4/16/2007**

Gr	No.	Loc.	ID	Prim	Tot	Class	Len	Wid	Asp	Analyte	Elements	Comment	Count Categories
G1	1	A2				NSD							
G1	2	C2				NSD							
G1	3	E2				NSD							
G1	4	G2				NSD							
G1	5	I2				NSD							
G1	6	H4				NSD							
G1	7	F4				NSD							
G1	8	D4				NSD							
G1	9	B4				NSD							
G1	10	A5				NSD							
G1	11	A7				NSD							
G1	12	C7				NSD							
G1	13	E7				NSD							
G1	14	G7				NSD							
G1	15	I7				NSD							
G1	16	J9				NSD							
G1	17	H9				NSD							
G1	18	F9				NSD							
G1	19	D9				NSD							
G1	20	B9				NSD							
G2	21	A2				NSD							
G2	22	C2				NSD							
G2	23	E2				NSD							
G2	24	G2				NSD							
G2	25	I2				NSD							
G2	26	J4				NSD							
G2	27	H4				NSD							
G2	28	F4				NSD							
G2	29	D4				NSD							
G2	30	B4				NSD							
G2	31	A7				NSD							
G2	32	C7				NSD							
G2	33	E7				NSD							
G2	34	G7				NSD							

Count Categories

AFB>5, 3:1	Asbestos Fibers and Bundles > 5um and 3:1	AS>5, 3:1	Asbestos Structures >5um and 3:1
PAS	Primary Asbestos Structures	PCMEF-ISO	PCM Equivalent Fibers-ISO
PCMEF-US	PCM Equivalent Fibers-NIOSH	PCMES-ISO	PCM Equivalent Structures-ISO
PCMES-US	PCM Equivalent Structures-NIOSH	TAS	Total Asbestos Structures

Lab/Cor, Inc.
7619 6th Ave Nw
Seattle, WA 98117

Final Report

Phone: (206) 781-0155
Fax: (206) 789-8424
http://www.labcor.net

A Professional Service Corporation in the Northwest

ISO 10312, Direct Raw Data

Job Number: 070434 **SEA**
Client: Idaho National Laboratory
Project Name: RARE

Report Number: 070434R06
Date Received: 4/23/2007

Client Sample No: **FB-3-R6** Lab/Cor Sample No: **S24**
Client Description: **Date Sampled: 4/16/2007**

Gr	No.	Loc.	ID	Prim	Tot	Class	Len	Wid	Asp	Analyte	Elements	Comment	Count Categories
G2	35	I7				NSD							

Count Categories

AFB>5, 3:1	Asbestos Fibers and Bundles > 5um and 3:1	AS>5, 3:1	Asbestos Structures >5um and 3:1
PAS	Primary Asbestos Structures	PCMEF-ISO	PCM Equivalent Fibers-ISO
PCMEF-US	PCM Equivalent Fibers-NIOSH	PCMES-ISO	PCM Equivalent Structures-ISO
PCMES-US	PCM Equivalent Structures-NIOSH	TAS	Total Asbestos Structures

Lab/Cor, Inc.
7619 6th Ave Nw
Seattle, WA 98117

Final Report

Phone: (206) 781-0155
Fax: (206) 789-8424
http://www.labcor.net

A Professional Service Corporation in the Northwest

ISO 10312, Direct Raw Data

Job Number: 070434 **SEA**
Client: Idaho National Laboratory
Project Name: RARE

Report Number: 070434R06
Date Received: 4/23/2007

Client Sample No: **FB-3-R7** Lab/Cor Sample No: **S25**
Client Description: **Date Sampled: 4/16/2007**

Gr	No.	Loc.	ID	Prim	Tot	Class	Len	Wid	Asp	Analyte	Elements	Comment	Count Categories
G1	1	A2	ADQ	1		MD 1-1	10	5.5	1.8	Tremolite	Mg, Al, Si, Ca, Fe		AS>5, 3:1
						ItemType	ItemNum				Confirmed	Comment	
						Brightfield	J3525 BF						
						Diffraction	J3525				KM 5/24/2007	5.3A IMAGE	
						Spectra	J2967						
G1	1	A2	ADQ		1	MF	5.7	0.6	9.5	Tremolite			AFB>5, 3:1, PCMEF-US, PCMEF-ISO
G1	2	C2				NSD							
G1	3	E2				NSD							
G1	4	G2				NSD							
G1	5	I2	ADQ	2	2	F	1.85	0.33	5.6	Tremolite	Mg, Si, K, Ca		
						ItemType	ItemNum				Confirmed	Comment	
						Brightfield	J3526 BF						
						Diffraction	J3526				KM 5/24/2007	5.3A IMAGE	
						Spectra	J2968						
G1	5	I2	ADQ	3	3	F	1.6	0.25	6.4	Tremolite	Mg, Si, K, Ca, Fe		
						ItemType	ItemNum				Confirmed	Comment	
						Brightfield	J3527 BF						
						Diffraction	J3527				KM 5/24/2007	5.3A IMAGE	
						Spectra	J2969						
G1	6	J4	ADQ	4	4	F	4.75	0.85	5.6	Tremolite	Mg, Si, K, Ca, Fe		
						ItemType	ItemNum				Confirmed	Comment	
						Brightfield	J3528 BF						
						Diffraction	J3528				KM 5/24/2007	5.3A IMAGE	
						Spectra	J2970						
G1	7	H4				NSD							
G1	8	F4				NSD							
G1	9	D4	AQ	5		MD 1-1	25	12	2.1	Tremolite	Mg, Si, Ca, Fe		AS>5, 3:1
G1	9	D4	AQ		5	MF	17.5	2.7	6.5	Tremolite			AFB>5, 3:1, PCMEF-US, PCMEF-ISO
G1	10	B4				NSD							
G1	11	A7	AD	6	6	F	4.65	0.38	12.2	Tremolite		5.3A CONFIRMATION	

Count Categories

AFB>5, 3:1	Asbestos Fibers and Bundles > 5um and 3:1	AS>5, 3:1	Asbestos Structures >5um and 3:1
PAS	Primary Asbestos Structures	PCMEF-ISO	PCM Equivalent Fibers-ISO
PCMEF-US	PCM Equivalent Fibers-NIOSH	PCMES-ISO	PCM Equivalent Structures-ISO
PCMES-US	PCM Equivalent Structures-NIOSH	TAS	Total Asbestos Structures

Lab/Cor, Inc.
7619 6th Ave Nw
Seattle, WA 98117

Final Report

Phone: (206) 781-0155
Fax: (206) 789-8424
http://www.labcor.net

A Professional Service Corporation in the Northwest

ISO 10312, Direct Raw Data

Job Number: 070434 **SEA**
Client: Idaho National Laboratory
Project Name: RARE

Report Number: 070434R06
Date Received: 4/23/2007

Client Sample No: **FB-3-R7** Lab/Cor Sample No: **S25**
Client Description: **Date Sampled: 4/16/2007**

Gr	No.	Loc.	ID	Prim	Tot	Class	Len	Wid	Asp	Analyte	Elements	Comment	Count Categories
G1	11	A7	ADQ	7	7	F	5.2	0.4	13	Tremolite	Mg, Al, Si, Ca, Fe		AS>5, 3:1, AFB>5, 3:1, PCMEF-US, PCMES-US, PCMEF-ISO, PCMES-ISO

ItemType	ItemNum	Confirmed	Comment
Brightfield	J3529 BF		
Diffraction	J3529	KM 5/24/2007	5.3A IMAGE
Spectra	J2971		

G1	12	C7				NSD							
G1	13	E7				NSD							
G1	14	G7				NSD							
G1	15	I7	ADQ	8	8	F	18	7	2.6	Tremolite	Mg, Si, Ca, Fe		
G1	15	I7	AQ	9	9	F	3.3	0.85	3.9	Tremolite			
G1	16	J9				NSD							
G1	17	H9				NSD							
G1	18	F9	ADQ	10		MD 1-1	15	12	1.2	Tremolite	Mg, Si, Ca, Fe		AS>5, 3:1
G1	18	F9	ADQ		10	MF	15	2	7.5	Tremolite			AFB>5, 3:1, PCMEF-US, PCMEF-ISO
G1	19	D9	AZQ	11	11	F	5.5	0.22	25	Tremolite	Mg, Si, Ca, Fe		AS>5, 3:1, AFB>5, 3:1, PCMEF-ISO, PCMES-ISO

ItemType	ItemNum	Confirmed	Comment
Brightfield	J3530 BF		
Diffraction	J3530	KM 5/24/2007	ZONE AXIS [7 1 0]
Spectra	J2972		

G1	20	B9	ADQ	12		MD 1-1	13.3	4	3.3	Tremolite	Mg, Si, Ca, Fe		AS>5, 3:1, PCMES-US
G1	20	B9	ADQ		12	MF	12.5	1	12.5	Tremolite			AFB>5, 3:1, PCMEF-US, PCMEF-ISO
G1	20	B9	AQ	13	13	F	4.5	0.85	5.3	Tremolite	Mg, Si, Ca, Fe		
G2	21	A2	AQ	14	14	F	5.6	0.7	8	Tremolite			AS>5, 3:1, AFB>5, 3:1, PCMEF-US, PCMES-US, PCMEF-ISO, PCMES-ISO
G2	22	C2	AZQ	15		CD 2-1	7	4.5	1.6	Tremolite	Mg, Al, Si, K, Ca, Fe		AS>5, 3:1

ItemType	ItemNum	Confirmed	Comment
Brightfield	J3531 BF		
Diffraction	J3531	KM 5/25/2007	ZONE AXIS [1 1 0]
Spectra	J2973		

Count Categories

AFB>5, 3:1	Asbestos Fibers and Bundles > 5um and 3:1	AS>5, 3:1	Asbestos Structures >5um and 3:1
PAS	Primary Asbestos Structures	PCMEF-ISO	PCM Equivalent Fibers-ISO
PCMEF-US	PCM Equivalent Fibers-NIOSH	PCMES-ISO	PCM Equivalent Structures-ISO
PCMES-US	PCM Equivalent Structures-NIOSH	TAS	Total Asbestos Structures

Lab/Cor, Inc.
7619 6th Ave Nw
Seattle, WA 98117

Final Report

Phone: (206) 781-0155
Fax: (206) 789-8424
http://www.labcor.net

A Professional Service Corporation in the Northwest

ISO 10312, Direct Raw Data

Job Number: 070434 **SEA**
Client: Idaho National Laboratory
Project Name: RARE

Report Number: 070434R06
Date Received: 4/23/2007

Client Sample No: **FB-3-R7** Lab/Cor Sample No: **S25**
Client Description: **Date Sampled: 4/16/2007**

Gr	No.	Loc.	ID	Prim	Tot	Class	Len	Wid	Asp	Analyte	Elements	Comment	Count Categories
G2	22	C2	AZQ		15	CF	7	0.25	28	Tremolite			AFB>5, 3:1, PCMEF-US, PCMEF-ISO
G2	22	C2	AZQ		16	CF	4.5	0.25	18	Tremolite			
G2	22	C2	ADQ	16	17	F	10.1	1	10.1	Tremolite	Mg, Al, Si, Ca, Fe		AS>5, 3:1, AFB>5, 3:1, PCMEF-US, PCMES-US, PCMEF-ISO, PCMES-ISO
G2	23	E2				NSD							
G2	24	G2				NSD							
G2	25	I2				NSD							
G2	26	J4				NSD							
G2	27	H4				NSD							
G2	28	F4	ADQ	17	18	F	7.2	1.5	4.8	Tremolite			PCMEF-US, PCMES-US, PCMEF-ISO, PCMES-ISO
G2	29	D4				NSD							
G2	30	B4				NSD							
G2	31	A7				NSD							
G2	32	C7				NSD							
G2	33	E7				NSD							
G2	34	G7				NSD							
G2	35	I7	ADQ	18	19	F	3	0.9	3.3	Tremolite			
G2	35	I7	ADQ	19	20	F	5.3	0.18	29.4	Tremolite			AS>5, 3:1, AFB>5, 3:1

Count Categories

AFB>5, 3:1	Asbestos Fibers and Bundles > 5um and 3:1	AS>5, 3:1	Asbestos Structures >5um and 3:1
PAS	Primary Asbestos Structures	PCMEF-ISO	PCM Equivalent Fibers-ISO
PCMEF-US	PCM Equivalent Fibers-NIOSH	PCMES-ISO	PCM Equivalent Structures-ISO
PCMES-US	PCM Equivalent Structures-NIOSH	TAS	Total Asbestos Structures

Lab/Cor, Inc.
7619 6th Ave Nw
Seattle, WA 98117

Final Report

Phone: (206) 781-0155
Fax: (206) 789-8424
http://www.labcor.net

A Professional Service Corporation in the Northwest

ISO 10312, Direct Raw Data

Job Number: 070434 **SEA**
Client: Idaho National Laboratory
Project Name: RARE

Report Number: 070434R06
Date Received: 4/23/2007

Client Sample No: **FB-2-R1** Lab/Cor Sample No: **S26**
Client Description: **Date Sampled: 4/16/2007**

Gr	No.	Loc.	ID	Prim	Tot	Class	Len	Wid	Asp	Analyte	Elements	Comment	Count Categories
G1	1	A2	AQ	1	1	F	4.5	1	4.5	Tremolite			
G1	1	A2	AQ	2	2	F	10.5	0.75	14	Tremolite			AS>5, 3:1, AFB>5, 3:1, PCMEF-US, PCMES-US, PCMEF-ISO, PCMES-ISO
G1	1	A2	AQ	3	3	F	4	0.45	8.9	Tremolite			
G1	1	A2	AQ	4	4	F	9	0.75	12	Tremolite			AS>5, 3:1, AFB>5, 3:1, PCMEF-US, PCMES-US, PCMEF-ISO, PCMES-ISO
G1	1	A2	AQ	5	5	F	20	1.5	13.3	Tremolite			AS>5, 3:1, AFB>5, 3:1, PCMEF-US, PCMES-US, PCMEF-ISO, PCMES-ISO
G1	1	A2	AQ	6	6	F	40	1.25	32	Tremolite			AS>5, 3:1, AFB>5, 3:1, PCMEF-US, PCMES-US, PCMEF-ISO, PCMES-ISO
G1	1	A2	AQ	7		MD 1-0	5	2.5	2	Tremolite			
G1	1	A2	AQ		7	MF	5	0.85	5.9	Tremolite			
G1	2	C2	AQ	8	8	F	8	2.12	3.8	Tremolite			PCMEF-US, PCMES-US, PCMEF-ISO, PCMES-ISO
G1	2	C2	AZQ	9		MD 1-0	10	9	1.1	Tremolite	Mg, Al, Si, Ca, Fe		AS>5, 3:1

ItemType	ItemNum	Confirmed	Comment
Brightfield	J3532 BF		
Diffraction	J3532	KM 5/25/2007	ZONE AXIS [1 0 1]
Spectra	J2974		

Gr	No.	Loc.	ID	Prim	Tot	Class	Len	Wid	Asp	Analyte	Elements	Comment	Count Categories
G1	2	C2	AZQ		9	MF	4.3	0.4	10.8	Tremolite			
G1	2	C2	AQ	10	10	B	19.5	1.25	15.6	Tremolite			AFB>5, 3:1, AS>5, 3:1, PCMES-US, PCMEF-US, PCMES-ISO, PCMEF-ISO
G1	2	C2	AQ	11	11	F	4.45	0.8	5.6	Tremolite			
G1	2	C2	AQ	12	12	F	4.65	1.25	3.7	Tremolite			
G1	3	E2	AQ	13	13	F	2.35	0.65	3.6	Tremolite			
G1	3	E2	AQ	14		MD 1-0	10	9	1.1	Tremolite			AS>5, 3:1
G1	3	E2	AQ		14	MF	4.85	0.9	5.4	Tremolite			
G1	3	E2	AQ	15	15	B	5.2	1.5	3.5	Tremolite			AFB>5, 3:1, AS>5, 3:1, PCMES-US, PCMEF-US, PCMES-ISO, PCMEF-ISO
G1	3	E2	AQ	16	16	F	7.5	1.75	4.3	Tremolite			PCMEF-US, PCMES-US, PCMEF-ISO, PCMES-ISO
G1	4	G2	AQ	17		MD 1-0	2.5	1.5	1.7	Tremolite			
G1	4	G2	AQ		17	MF	2.2	0.38	5.8	Tremolite			

Count Categories

AFB>5, 3:1	Asbestos Fibers and Bundles > 5um and 3:1	AS>5, 3:1	Asbestos Structures >5um and 3:1
PAS	Primary Asbestos Structures	PCMEF-ISO	PCM Equivalent Fibers-ISO
PCMEF-US	PCM Equivalent Fibers-NIOSH	PCMES-ISO	PCM Equivalent Structures-ISO
PCMES-US	PCM Equivalent Structures-NIOSH	TAS	Total Asbestos Structures

Lab/Cor, Inc.
7619 6th Ave Nw
Seattle, WA 98117

Final Report

Phone: (206) 781-0155
Fax: (206) 789-8424
http://www.labcor.net

A Professional Service Corporation in the Northwest

ISO 10312, Direct Raw Data

Job Number: 070434 **SEA**
Client: Idaho National Laboratory
Project Name: RARE

Report Number: 070434R06
Date Received: 4/23/2007

Client Sample No: **FB-2-R1** Lab/Cor Sample No: **S26**
Client Description: **Date Sampled: 4/16/2007**

Gr	No.	Loc.	ID	Prim	Tot	Class	Len	Wid	Asp	Analyte	Elements	Comment	Count Categories
G1	4	G2	AQ	18	18	F	6.25	0.6	10.4	Tremolite			AS>5, 3:1, AFB>5, 3:1, PCMEF-US, PCMES-US, PCMEF-ISO, PCMES-ISO
G1	4	G2	AQ	19	19	F	2.2	0.45	4.9	Tremolite			
G1	4	G2	AQ	20	20	F	6	1.2	5	Tremolite			AS>5, 3:1, AFB>5, 3:1, PCMEF-US, PCMES-US, PCMEF-ISO, PCMES-ISO
G1	5	I2	AQ	21		MD 1-0	3.3	2.2	1.5	Tremolite			
G1	5	I2	AQ		21	MF	3.3	0.55	6	Tremolite			
G1	5	I2	AQ	22		MD 1-1	12	10	1.2	Tremolite			AS>5, 3:1
G1	5	I2	AQ		22	MF	8.2	0.5	16.4	Tremolite			AFB>5, 3:1, PCMEF-US, PCMEF-ISO
G1	5	I2	ADQ	23		MD 1-1	18	14	1.3	Tremolite	Mg, Al, Si, Ca, Fe		AS>5, 3:1

ItemType	ItemNum	Confirmed	Comment
Brightfield	J3533 BF		
Diffraction	J3533	KM 5/25/2007	5.3A IMAGE
Spectra	J2975		

Gr	No.	Loc.	ID	Prim	Tot	Class	Len	Wid	Asp	Analyte	Elements	Comment	Count Categories
G1	5	I2	ADQ		23	MF	13	0.4	32.5	Tremolite			AFB>5, 3:1, PCMEF-US, PCMEF-ISO
G1	5	I2	AQ	24	24	F	4.35	0.8	5.4	Tremolite			
G1	5	I2	AQ	25	25	F	4.9	1	4.9	Tremolite			
G1	5	I2	AQ	26	26	F	3.5	0.75	4.7	Tremolite			
G1	5	I2	AQ	27	27	F	2.35	0.38	6.2	Tremolite			
G1	6	J4	AQ	28	28	F	8	2	4	Tremolite			PCMEF-US, PCMES-US, PCMEF-ISO, PCMES-ISO
G1	6	J4	AQ	29	29	F	1.35	0.22	6.1	Tremolite			
G1	6	J4	AQ	30	30	F	4.75	1.7	2.8	Tremolite			
G1	6	J4	AQ	31	31	F	1.9	0.5	3.8	Tremolite			
G1	7	H4	AQ	32	32	F	13.6	1.65	8.2	Tremolite			AS>5, 3:1, AFB>5, 3:1, PCMEF-US, PCMES-US, PCMEF-ISO, PCMES-ISO
G1	7	H4	AQ	33	33	F	1.7	0.38	4.5	Tremolite			
G1	7	H4	AQ	34	34	F	28	2	14	Tremolite			AS>5, 3:1, AFB>5, 3:1, PCMEF-US, PCMES-US, PCMEF-ISO, PCMES-ISO
G1	7	H4	AQ	35	35	F	2.2	0.4	5.5	Tremolite			
G1	7	H4	AQ	36	36	F	1.5	0.4	3.8	Tremolite			
G1	7	H4	AQ	37	37	F	9.5	2	4.8	Tremolite			PCMEF-US, PCMES-US, PCMEF-ISO, PCMES-ISO

Count Categories

AFB>5, 3:1	Asbestos Fibers and Bundles > 5um and 3:1	AS>5, 3:1	Asbestos Structures >5um and 3:1
PAS	Primary Asbestos Structures	PCMEF-ISO	PCM Equivalent Fibers-ISO
PCMEF-US	PCM Equivalent Fibers-NIOSH	PCMES-ISO	PCM Equivalent Structures-ISO
PCMES-US	PCM Equivalent Structures-NIOSH	TAS	Total Asbestos Structures

Lab/Cor, Inc.
7619 6th Ave Nw
Seattle, WA 98117

Final Report

Phone: (206) 781-0155
Fax: (206) 789-8424
http://www.labcor.net

A Professional Service Corporation in the Northwest

ISO 10312, Direct Raw Data

Job Number: 070434 **SEA**
Client: Idaho National Laboratory
Project Name: RARE

Report Number: 070434R06
Date Received: 4/23/2007

Client Sample No: **FB-2-R1** Lab/Cor Sample No: **S26**
Client Description: **Date Sampled: 4/16/2007**

Gr	No.	Loc.	ID	Prim	Tot	Class	Len	Wid	Asp	Analyte	Elements	Comment	Count Categories
G1	8	F4	AQ	38	38	F	70	1	70	Tremolite			AS>5, 3:1, AFB>5, 3:1, PCMEF-US, PCMES-US, PCMEF-ISO, PCMES-ISO
G1	8	F4	AQ	39		MD 1-0	3.85	1.5	2.6	Tremolite			
G1	8	F4	AQ		39	MF	3	0.2	15	Tremolite			
G1	8	F4	AQ	40	40	F	1	0.3	3.3	Tremolite			
G1	8	F4	AQ	41	41	F	4.25	0.65	6.5	Tremolite			
G1	9	D4	AQ	42	42	F	9.9	0.85	11.6	Tremolite			AS>5, 3:1, AFB>5, 3:1, PCMEF-US, PCMES-US, PCMEF-ISO, PCMES-ISO
G1	9	D4	AQ	43	43	F	3	0.4	7.5	Tremolite			
G1	9	D4	AQ	44	44	F	3.85	0.85	4.5	Tremolite			
G1	9	D4	AQ	45	45	F	4.75	0.6	7.9	Tremolite			
G1	9	D4	AQ	46	46	F	2	0.75	2.7	Tremolite			
G1	9	D4	AQ	47	47	F	10.2	1.25	8.2	Tremolite			AS>5, 3:1, AFB>5, 3:1, PCMEF-US, PCMES-US, PCMEF-ISO, PCMES-ISO
G1	9	D4	AQ	48	48	F	2.1	0.2	10.5	Tremolite			
G1	10	B4	AQ	49	49	F	4.75	0.55	8.6	Tremolite			
G1	10	B4	AQ	50	50	F	9.5	1	9.5	Tremolite			AS>5, 3:1, AFB>5, 3:1, PCMEF-US, PCMES-US, PCMEF-ISO, PCMES-ISO
G1	10	B4	AQ	51		MD 1-1	18.5	4	4.6	Tremolite			AS>5, 3:1, PCMES-US
G1	10	B4	AQ		51	MF	17.5	1.1	15.9	Tremolite			AFB>5, 3:1, PCMEF-US, PCMEF-ISO
G1	10	B4	AQ	52	52	F	2.9	0.4	7.2	Tremolite			
G1	10	B4	AQ	53	53	F	4.8	0.8	6	Tremolite			
G1	10	B4	AQ	54	54	F	8.5	0.35	24.3	Tremolite			AS>5, 3:1, AFB>5, 3:1, PCMEF-US, PCMES-US, PCMEF-ISO, PCMES-ISO
G1	11	A7	AQ	55	55	F	5.15	0.65	7.9	Tremolite			AS>5, 3:1, AFB>5, 3:1, PCMEF-US, PCMES-US, PCMEF-ISO, PCMES-ISO
G1	11	A7	AQ	56	56	F	1.3	0.22	5.9	Tremolite			
G1	11	A7	AQ	57	57	F	3.2	0.6	5.3	Tremolite			
G1	11	A7	AQ	58		MD 1-0	3	1.5	2	Tremolite			
G1	11	A7	AQ		58	MF	2.3	0.45	5.1	Tremolite			
G1	11	A7	AQ	59	59	F	10	3	3.3	Tremolite			PCMEF-US, PCMES-US, PCMEF-ISO, PCMES-ISO
G1	11	A7	AQ	60	60	F	4.75	1.1	4.3	Tremolite			
G1	11	A7	AQ	61	61	F	4.25	0.5	8.5	Tremolite			

Count Categories

AFB>5, 3:1	Asbestos Fibers and Bundles > 5um and 3:1	AS>5, 3:1	Asbestos Structures >5um and 3:1
PAS	Primary Asbestos Structures	PCMEF-ISO	PCM Equivalent Fibers-ISO
PCMEF-US	PCM Equivalent Fibers-NIOSH	PCMES-ISO	PCM Equivalent Structures-ISO
PCMES-US	PCM Equivalent Structures-NIOSH	TAS	Total Asbestos Structures

Lab/Cor, Inc.
7619 6th Ave Nw
Seattle, WA 98117

Final Report

Phone: (206) 781-0155
Fax: (206) 789-8424
http://www.labcor.net

A Professional Service Corporation in the Northwest

ISO 10312, Direct Raw Data

Job Number: 070434 **SEA**
Client: Idaho National Laboratory
Project Name: RARE

Report Number: 070434R06
Date Received: 4/23/2007

Client Sample No: **FB-2-R1** Lab/Cor Sample No: **S26**
Client Description: **Date Sampled: 4/16/2007**

Gr	No.	Loc.	ID	Prim	Tot	Class	Len	Wid	Asp	Analyte	Elements	Comment	Count Categories
G1	12	C7	AQ	62		MD 1-1	8	4	2	Tremolite			AS>5, 3:1
G1	12	C7	AQ		62	MF	5.8	0.4	14.5	Tremolite			AFB>5, 3:1, PCMEF-US, PCMEF-ISO
G1	12	C7	AQ	63		MD 1-1	9	7	1.3	Tremolite			AS>5, 3:1
G1	12	C7	AQ		63	MF	9	0.4	22.5	Tremolite			AFB>5, 3:1, PCMEF-US, PCMEF-ISO
G1	12	C7	AQ	64	64	F	4.7	0.7	6.7	Tremolite			
G1	12	C7	AQ	65		MD 1-0	5.2	1.5	3.5	Tremolite			AS>5, 3:1, PCMES-US, PCMES-ISO
G1	12	C7	AQ		65	MF	4.8	0.2	24	Tremolite			
G1	12	C7	AQ	66	66	F	3	0.38	7.9	Tremolite			
G1	12	C7	AQ	67	67	F	7.5	2.5	3	Tremolite			PCMEF-US, PCMES-US, PCMEF-ISO, PCMES-ISO
G1	12	C7	AQ	68		MD 1-1	11.5	6	1.9	Tremolite			AS>5, 3:1
G1	12	C7	AQ		68	MF	7.35	0.65	11.3	Tremolite			AFB>5, 3:1, PCMEF-US, PCMEF-ISO
G1	12	C7	AQ	69	69	F	6.2	1.8	3.4	Tremolite			PCMEF-US, PCMES-US, PCMEF-ISO, PCMES-ISO
G1	13	E7	AQ	70	70	F	4.7	0.65	7.2	Tremolite			
G1	13	E7	AQ	71	71	F	3	0.7	4.3	Tremolite			
G1	13	E7	AQ	72	72	F	7	0.18	38.9	Tremolite			AS>5, 3:1, AFB>5, 3:1
G1	13	E7	AQ	73	73	F	12.2	2	6.1	Tremolite			AS>5, 3:1, AFB>5, 3:1, PCMEF-US, PCMES-US, PCMES-ISO, PCMEF-ISO
G1	14	G7	AQ	74	74	F	12.5	1.25	10	Tremolite			AS>5, 3:1, AFB>5, 3:1, PCMEF-US, PCMES-US, PCMEF-ISO, PCMES-ISO
G1	14	G7	AQ	75	75	F	4.2	1.8	2.3	Tremolite			
G1	14	G7	AQ	76	76	F	1.6	0.4	4	Tremolite			
G1	14	G7	AQ	77	77	F	3.4	0.4	8.5	Tremolite			
G1	15	I7	AQ	78		MD 1-1	10.7	5	2.1	Tremolite			AS>5, 3:1
G1	15	I7	AQ		78	MF	9.65	1	9.6	Tremolite			AFB>5, 3:1, PCMEF-US, PCMEF-ISO
G1	15	I7	AQ	79	79	F	5.1	1.2	4.2	Tremolite			PCMEF-US, PCMES-US, PCMEF-ISO, PCMES-ISO
G1	15	I7	AQ	80		MD 1-0	4.8	4.8	1	Tremolite			
G1	15	I7	AQ		80	MF	4.2	0.65	6.5	Tremolite			
G1	15	I7	AQ	81	81	F	14.4	0.4	36	Tremolite			AS>5, 3:1, AFB>5, 3:1, PCMEF-US, PCMES-US, PCMEF-ISO, PCMES-ISO

Count Categories

AFB>5, 3:1	Asbestos Fibers and Bundles > 5um and 3:1	AS>5, 3:1	Asbestos Structures >5um and 3:1
PAS	Primary Asbestos Structures	PCMEF-ISO	PCM Equivalent Fibers-ISO
PCMEF-US	PCM Equivalent Fibers-NIOSH	PCMES-ISO	PCM Equivalent Structures-ISO
PCMES-US	PCM Equivalent Structures-NIOSH	TAS	Total Asbestos Structures

Lab/Cor, Inc.
7619 6th Ave Nw
Seattle, WA 98117

Final Report

Phone: (206) 781-0155
Fax: (206) 789-8424
http://www.labcor.net

A Professional Service Corporation in the Northwest

ISO 10312, Direct Raw Data

Job Number: 070434 **SEA**
Client: Idaho National Laboratory
Project Name: RARE

Report Number: 070434R06
Date Received: 4/23/2007

Client Sample No: **FB-2-R1** Lab/Cor Sample No: **S26**
Client Description: **Date Sampled: 4/16/2007**

Gr	No.	Loc.	ID	Prim	Tot	Class	Len	Wid	Asp	Analyte	Elements	Comment	Count Categories
G1	15	I7	AQ	82	82	F	12.5	1	12.5	Tremolite			AS>5, 3:1, AFB>5, 3:1, PCMEF-US, PCMES-US, PCMEF-ISO, PCMES-ISO
G1	15	I7	AQ	83	83	F	4.85	0.5	9.7	Tremolite			
G1	15	I7	AQ	84		MD 2-2	18	12	1.5	Tremolite			AS>5, 3:1
G1	15	I7	AQ		84	MF	12	1.25	9.6	Tremolite			AFB>5, 3:1, PCMEF-US, PCMEF-ISO
G1	15	I7	AQ		85	MF	8.7	1.8	4.8	Tremolite			PCMEF-US, PCMEF-ISO
G1	15	I7	AQ	85		MD 1-0	6	5.8	1	Tremolite			AS>5, 3:1
G1	15	I7	AQ		86	MF	4.5	1	4.5	Tremolite			
G1	16	J9	AQ	86	87	F	3.5	1	3.5	Tremolite			
G1	16	J9	AQ	87	88	F	3.25	0.5	6.5	Tremolite			
G1	16	J9	AQ	88	89	F	10.5	0.7	15	Tremolite			AS>5, 3:1, AFB>5, 3:1, PCMEF-US, PCMES-US, PCMEF-ISO, PCMES-ISO
G1	16	J9	AQ	89		CD 4-4	26.5	13	2	Tremolite			AS>5, 3:1

ItemType	ItemNum	Confirmed	Comment
Brightfield	J3534 BF		

Gr	No.	Loc.	ID	Prim	Tot	Class	Len	Wid	Asp	Analyte	Elements	Comment	Count Categories
G1	16	J9	AQ		90	CF	24.35	2.85	8.5	Tremolite			AFB>5, 3:1, PCMEF-US, PCMEF-ISO
G1	16	J9	AQ		91	CF	11.5	0.75	15.3	Tremolite			AFB>5, 3:1, PCMEF-US, PCMEF-ISO
G1	16	J9	AQ		92	CF	7.9	1.7	4.6	Tremolite			PCMEF-US, PCMEF-ISO
G1	16	J9	AQ		93	CF	5.5	0.9	6.1	Tremolite			AFB>5, 3:1, PCMEF-US, PCMEF-ISO
G1	17	H9	AQ	90		MD 1-1	8	5	1.6	Tremolite			AS>5, 3:1
G1	17	H9	AQ		94	MF	7	0.65	10.8	Tremolite			AFB>5, 3:1, PCMEF-US, PCMEF-ISO
G1	17	H9	AQ	91	95	F	3	0.65	4.6	Tremolite			
G1	17	H9	AQ	92	96	F	9.75	0.9	10.8	Tremolite			AS>5, 3:1, AFB>5, 3:1, PCMEF-US, PCMES-US, PCMEF-ISO, PCMES-ISO
G1	17	H9	AQ	93		MD 1-0	4.5	1.5	3	Tremolite			
G1	17	H9	AQ		97	MF	1.75	0.38	4.6	Tremolite			
G1	18	F9	AQ	94	98	F	1.65	0.45	3.7	Tremolite			
G1	18	F9	AQ	95	99	F	3.2	0.75	4.3	Tremolite			
G1	18	F9	AQ	96	100	F	4	0.75	5.3	Tremolite			
G1	18	F9	AQ	97	101	F	2.5	0.25	10	Tremolite			
G1	18	F9	AQ	98		MD 1-0	7.5	6	1.2	Tremolite			AS>5, 3:1
G1	18	F9	AQ		102	MF	4.8	0.9	5.3	Tremolite			

Count Categories

AFB>5, 3:1	Asbestos Fibers and Bundles > 5um and 3:1	AS>5, 3:1	Asbestos Structures >5um and 3:1
PAS	Primary Asbestos Structures	PCMEF-ISO	PCM Equivalent Fibers-ISO
PCMEF-US	PCM Equivalent Fibers-NIOSH	PCMES-ISO	PCM Equivalent Structures-ISO
PCMES-US	PCM Equivalent Structures-NIOSH	TAS	Total Asbestos Structures

Lab/Cor, Inc.
7619 6th Ave Nw
Seattle, WA 98117

Final Report

Phone: (206) 781-0155
Fax: (206) 789-8424
http://www.labcor.net

A Professional Service Corporation in the Northwest

ISO 10312, Direct Raw Data

Job Number: 070434 **SEA**
Client: Idaho National Laboratory
Project Name: RARE

Report Number: 070434R06
Date Received: 4/23/2007

Client Sample No: **FB-2-R1** Lab/Cor Sample No: **S26**
Client Description: **Date Sampled: 4/16/2007**

Gr	No.	Loc.	ID	Prim	Tot	Class	Len	Wid	Asp	Analyte	Elements	Comment	Count Categories
G1	18	F9	AQ	99	103	F	4.2	0.65	6.5	Tremolite			
G1	19	D9	AQ	100	104	F	35.5	2.5	14.2	Tremolite			AS>5, 3:1, AFB>5, 3:1, PCMEF-US, PCMES-US, PCMEF-ISO, PCMES-ISO
G1	19	D9	AQ	101	105	F	14	1.2	11.7	Tremolite			AS>5, 3:1, AFB>5, 3:1, PCMEF-US, PCMES-US, PCMEF-ISO, PCMES-ISO
G1	19	D9	AQ	102	106	F	11.8	3	3.9	Tremolite			PCMEF-US, PCMES-US, PCMEF-ISO, PCMES-ISO
G1	19	D9	AQ	103	107	F	7.75	1.8	4.3	Tremolite			PCMEF-US, PCMES-US, PCMEF-ISO, PCMES-ISO
G1	19	D9	AQ	104	108	F	2	0.35	5.7	Tremolite			
G1	20	B9	AQ	105	109	F	2.8	0.45	6.2	Tremolite			
G1	20	B9	AQ	106	110	F	12	0.4	30	Tremolite			AS>5, 3:1, AFB>5, 3:1, PCMEF-US, PCMES-US, PCMEF-ISO, PCMES-ISO
G1	20	B9	AQ	107	111	F	10	1.2	8.3	Tremolite			AS>5, 3:1, AFB>5, 3:1, PCMEF-US, PCMES-US, PCMEF-ISO, PCMES-ISO
G1	20	B9	AQ	108	112	F	10.5	2	5.2	Tremolite			AS>5, 3:1, AFB>5, 3:1, PCMEF-US, PCMES-US, PCMEF-ISO, PCMES-ISO
G1	20	B9	AQ	109	113	F	8	0.5	16	Tremolite			AS>5, 3:1, AFB>5, 3:1, PCMEF-US, PCMES-US, PCMEF-ISO, PCMES-ISO
G1	20	B9	AQ	110		MD 2-1	22	8	2.8	Tremolite			AS>5, 3:1
G1	20	B9	AQ		114	MF	20.7	3	6.9	Tremolite			AFB>5, 3:1, PCMEF-US, PCMEF-ISO
G1	20	B9	AQ		115	MF	4.75	0.2	23.8	Tremolite			
G1	20	B9	AQ	111		MD 1-0	3.5	1.2	2.9	Tremolite			
G1	20	B9	AQ		116	MF	3	0.45	6.7	Tremolite			
G2	21	A2	AQ	112	117	F	23.5	3	7.8	Tremolite			AS>5, 3:1, AFB>5, 3:1, PCMEF-US, PCMES-US, PCMEF-ISO, PCMES-ISO
G2	21	A2	AQ	113	118	F	7.5	2	3.8	Tremolite			PCMEF-US, PCMES-US, PCMEF-ISO, PCMES-ISO
G2	21	A2	AQ	114		MD 1-1	8.5	6	1.4	Tremolite			AS>5, 3:1
G2	21	A2	AQ		119	MF	6	0.8	7.5	Tremolite			AFB>5, 3:1, PCMEF-US, PCMEF-ISO
G2	21	A2	AQ	115	120	F	2.5	0.5	5	Tremolite			
G2	21	A2	AQ	116	121	F	1.75	0.2	8.8	Tremolite			
G2	21	A2	AQ	117		MD 1-0	6	3	2	Tremolite			AS>5, 3:1
G2	21	A2	AQ		122	MF	3.1	0.9	3.4	Tremolite			

Count Categories

AFB>5, 3:1	Asbestos Fibers and Bundles > 5um and 3:1	AS>5, 3:1	Asbestos Structures >5um and 3:1
PAS	Primary Asbestos Structures	PCMEF-ISO	PCM Equivalent Fibers-ISO
PCMEF-US	PCM Equivalent Fibers-NIOSH	PCMES-ISO	PCM Equivalent Structures-ISO
PCMES-US	PCM Equivalent Structures-NIOSH	TAS	Total Asbestos Structures

Lab/Cor, Inc.
7619 6th Ave Nw
Seattle, WA 98117

Final Report

Phone: (206) 781-0155
Fax: (206) 789-8424
http://www.labcor.net

A Professional Service Corporation in the Northwest

ISO 10312, Direct Raw Data

Job Number: 070434 **SEA**
Client: Idaho National Laboratory
Project Name: RARE

Report Number: 070434R06
Date Received: 4/23/2007

Client Sample No: **FB-2-R1** Lab/Cor Sample No: **S26**
Client Description: **Date Sampled: 4/16/2007**

Gr	No.	Loc.	ID	Prim	Tot	Class	Len	Wid	Asp	Analyte	Elements	Comment	Count Categories
G2	21	A2	AQ	118		MD 1-1	10.2	1.8	5.7	Tremolite			AS>5, 3:1, PCMES-US, PCMES-ISO
G2	21	A2	AQ		123	MF	9.2	0.55	16.7	Tremolite			AFB>5, 3:1, PCMEF-US, PCMEF-ISO
G2	21	A2	AQ	119	124	F	10.2	0.5	20.4	Tremolite			AS>5, 3:1, AFB>5, 3:1, PCMEF-US, PCMES-US, PCMEF-ISO, PCMES-ISO
G2	22	C2	AQ	120	125	F	1.35	0.4	3.4	Tremolite			
G2	22	C2	AQ	121		MD 1-0	3	1.5	2	Tremolite			
G2	22	C2	AQ		126	MF	3	0.35	8.6	Tremolite			
G2	22	C2	AQ	122	127	F	7	1.1	6.4	Tremolite			AS>5, 3:1, AFB>5, 3:1, PCMEF-US, PCMES-US, PCMEF-ISO, PCMES-ISO
G2	23	E2	AQ	123	128	F	5.25	0.55	9.5	Tremolite			AS>5, 3:1, AFB>5, 3:1, PCMEF-US, PCMES-US, PCMES-ISO, PCMEF-ISO
G2	23	E2	AQ	124	129	F	3	0.45	6.7	Tremolite			
G2	23	E2	AQ	125	130	F	1.25	0.35	3.6	Tremolite			
G2	23	E2	AQ	126		MD 1-1	16	7	2.3	Tremolite			AS>5, 3:1
G2	23	E2	AQ		131	MF	12	2.5	4.8	Tremolite			PCMEF-US, PCMEF-ISO
G2	24	G2	AQ	127	132	F	1.75	0.5	3.5	Tremolite			
G2	24	G2	AQ	128		CD 2-2	14	8	1.8	Tremolite			AS>5, 3:1

ItemType	ItemNum	Confirmed	Comment
Brightfield	J3535 BF		

G2	24	G2	AQ		133	CF	14	4	3.5	Tremolite			PCMEF-US
G2	24	G2	AQ		134	CF	9	0.8	11.2	Tremolite			AFB>5, 3:1, PCMEF-US, PCMEF-ISO
G2	24	G2	AQ	129	135	F	10	1.2	8.3	Tremolite			AS>5, 3:1, AFB>5, 3:1, PCMEF-US, PCMES-US, PCMEF-ISO, PCMES-ISO
G2	25	I2	AQ	130	136	F	3.5	0.4	8.8	Tremolite			
G2	25	I2	AQ	131	137	F	5.2	1.25	4.2	Tremolite			PCMEF-US, PCMES-US, PCMEF-ISO, PCMES-ISO
G2	25	I2	AQ	132	138	F	4.35	1.35	3.2	Tremolite			
G2	26	J4	AQ	133	139	F	6.2	1.85	3.4	Tremolite			PCMEF-US, PCMES-US, PCMEF-ISO, PCMES-ISO
G2	26	J4	AQ	134		MD 1-1	22	10	2.2	Tremolite			AS>5, 3:1
G2	26	J4	AQ		140	MF	20	2.2	9.1	Tremolite			AFB>5, 3:1, PCMEF-US, PCMEF-ISO
G2	26	J4	AQ	135	141	F	7.25	2.5	2.9	Tremolite			
G2	26	J4	AQ	136	142	F	3.5	0.4	8.8	Tremolite			

Count Categories

AFB>5, 3:1	Asbestos Fibers and Bundles > 5um and 3:1	AS>5, 3:1	Asbestos Structures >5um and 3:1
PAS	Primary Asbestos Structures	PCMEF-ISO	PCM Equivalent Fibers-ISO
PCMEF-US	PCM Equivalent Fibers-NIOSH	PCMES-ISO	PCM Equivalent Structures-ISO
PCMES-US	PCM Equivalent Structures-NIOSH	TAS	Total Asbestos Structures

Lab/Cor, Inc.
7619 6th Ave Nw
Seattle, WA 98117

Final Report

Phone: (206) 781-0155
Fax: (206) 789-8424
http://www.labcor.net

A Professional Service Corporation in the Northwest

ISO 10312, Direct Raw Data

Job Number: 070434 **SEA**
Client: Idaho National Laboratory
Project Name: RARE

Report Number: 070434R06
Date Received: 4/23/2007

Client Sample No: **FB-2-R1** Lab/Cor Sample No: **S26**
Client Description: **Date Sampled: 4/16/2007**

Gr	No.	Loc.	ID	Prim	Tot	Class	Len	Wid	Asp	Analyte	Elements	Comment	Count Categories
G2	26	J4	AQ	137	143	F	5.12	1.6	3.2	Tremolite			PCMEF-US, PCMES-US, PCMEF-ISO, PCMES-ISO
G2	26	J4	AQ	138	144	F	9.5	1.8	5.3	Tremolite			AS>5, 3:1, AFB>5, 3:1, PCMEF-US, PCMES-US, PCMEF-ISO, PCMES-ISO
G2	26	J4	AQ	139	145	F	7	0.5	14	Tremolite			AS>5, 3:1, AFB>5, 3:1, PCMEF-US, PCMES-US, PCMEF-ISO, PCMES-ISO
G2	26	J4	AQ	140	146	F	10	1.25	8	Tremolite			AS>5, 3:1, AFB>5, 3:1, PCMEF-US, PCMES-US, PCMEF-ISO, PCMES-ISO
G2	26	J4	AQ	141	147	F	17	2	8.5	Tremolite			AS>5, 3:1, AFB>5, 3:1, PCMEF-US, PCMES-US, PCMEF-ISO, PCMES-ISO
G2	26	J4	AQ	142		MD 1-1	11.5	5	2.3	Tremolite			AS>5, 3:1
G2	26	J4	AQ		148	MF	5.35	1.2	4.5	Tremolite			PCMEF-US, PCMEF-ISO
G2	27	H4	AQ	143	149	F	13.5	1.2	11.2	Tremolite			AS>5, 3:1, AFB>5, 3:1, PCMEF-US, PCMES-US, PCMEF-ISO, PCMES-ISO
G2	27	H4	AQ	144	150	F	5.6	0.7	8	Tremolite			AFB>5, 3:1, AS>5, 3:1, PCMEF-US, PCMES-US, PCMEF-ISO, PCMES-ISO
G2	27	H4	AQ	145	151	F	7.75	0.8	9.7	Tremolite			AS>5, 3:1, AFB>5, 3:1, PCMEF-US, PCMES-US, PCMEF-ISO, PCMES-ISO
G2	27	H4	AQ	146	152	B	8	2	4	Tremolite			AFB>5, 3:1, AS>5, 3:1, PCMEF-US, PCMES-US, PCMES-ISO, PCMEF-ISO
G2	28	F4	AQ	147	153	F	20	1.2	16.7	Tremolite			AS>5, 3:1, AFB>5, 3:1, PCMEF-US, PCMES-US, PCMEF-ISO, PCMES-ISO
G2	28	F4	AQ	148	154	F	2.35	0.5	4.7	Tremolite			
G2	28	F4	AQ	149	155	F	2.75	0.18	15.3	Tremolite			
G2	28	F4	AQ	150	156	F	18	4	4.5	Tremolite			PCMEF-US, PCMES-US
G2	28	F4	AQ	151	157	F	6.2	1.35	4.6	Tremolite			PCMEF-US, PCMES-US, PCMEF-ISO, PCMES-ISO
G2	29	D4	AQ	152		MD 1-1	10	4	2.5	Tremolite			AS>5, 3:1
G2	29	D4	AQ		158	MF	9.5	0.85	11.2	Tremolite			AFB>5, 3:1, PCMEF-US, PCMEF-ISO
G2	29	D4	AQ	153	159	F	10	0.7	14.3	Tremolite			AS>5, 3:1, AFB>5, 3:1, PCMEF-US, PCMES-US, PCMEF-ISO, PCMES-ISO
G2	29	D4	AQ	154		MD 1-1	7	2	3.5	Tremolite			AS>5, 3:1, PCMES-US, PCMES-ISO
G2	29	D4	AQ		160	MF	6	0.65	9.2	Tremolite			AFB>5, 3:1, PCMEF-US, PCMEF-ISO

Count Categories

AFB>5, 3:1	Asbestos Fibers and Bundles > 5um and 3:1	AS>5, 3:1	Asbestos Structures >5um and 3:1
PAS	Primary Asbestos Structures	PCMEF-ISO	PCM Equivalent Fibers-ISO
PCMEF-US	PCM Equivalent Fibers-NIOSH	PCMES-ISO	PCM Equivalent Structures-ISO
PCMES-US	PCM Equivalent Structures-NIOSH	TAS	Total Asbestos Structures

Lab/Cor, Inc.
7619 6th Ave Nw
Seattle, WA 98117

Final Report

Phone: (206) 781-0155
Fax: (206) 789-8424
http://www.labcor.net

A Professional Service Corporation in the Northwest

ISO 10312, Direct Raw Data

Job Number: 070434 **SEA**
Client: Idaho National Laboratory
Project Name: RARE

Report Number: 070434R06
Date Received: 4/23/2007

Client Sample No: **FB-2-R1** Lab/Cor Sample No: **S26**
Client Description: **Date Sampled: 4/16/2007**

Gr	No.	Loc.	ID	Prim	Tot	Class	Len	Wid	Asp	Analyte	Elements	Comment	Count Categories
G2	29	D4	AQ	155	161	F	4.25	0.65	6.5	Tremolite			
G2	29	D4	AQ	156		MD 1-1	27	10	2.7	Tremolite			AS>5, 3:1
G2	29	D4	AQ		162	MF	20.2	0.45	44.9	Tremolite			AFB>5, 3:1, PCMEF-US, PCMEF-ISO
G2	29	D4	AQ	157	163	F	8.5	1	8.5	Tremolite			AS>5, 3:1, AFB>5, 3:1, PCMEF-US, PCMES-US, PCMEF-ISO, PCMES-ISO
G2	30	B4	AQ	158	164	F	13	0.6	21.7	Tremolite			AS>5, 3:1, AFB>5, 3:1, PCMEF-US, PCMES-US, PCMEF-ISO, PCMES-ISO
G2	30	B4	AQ	159		MD 1-1	5.2	3	1.7	Tremolite			AS>5, 3:1
G2	30	B4	AQ		165	MF	5.2	0.45	11.6	Tremolite			AFB>5, 3:1, PCMEF-US, PCMEF-ISO
G2	30	B4	AQ	160	166	F	4.9	1.2	4.1	Tremolite			
G2	30	B4	AQ	161	167	F	4.75	0.7	6.8	Tremolite			
G2	30	B4	AQ	162		MD 1-0	5	4	1.2	Tremolite			
G2	30	B4	AQ		168	MF	2.5	0.2	12.5	Tremolite			
G2	30	B4	AQ	163	169	F	3.8	0.8	4.8	Tremolite			
G2	30	B4	AQ	164		MD 2-0	4.5	1.5	3	Tremolite			
G2	30	B4	AQ		170	MF	1.8	0.2	9	Tremolite			
G2	30	B4	AQ		171	MF	1.3	0.38	3.4	Tremolite			
G2	30	B4	AQ	165		MD 1-0	4.858	3.5	1.4	Tremolite			
G2	30	B4	AQ		172	MF	3.35	1	3.3	Tremolite			
G2	31	A7	AQ	166	173	F	2	0.35	5.7	Tremolite			
G2	31	A7	AQ	167	174	F	3	0.65	4.6	Tremolite			
G2	31	A7	AQ	168	175	F	4.9	1.5	3.3	Tremolite			
G2	31	A7	AQ	169	176	F	4.85	0.7	6.9	Tremolite			
G2	31	A7	AQ	170		CD 3-2	13	11	1.2	Tremolite			AS>5, 3:1
G2	31	A7	AQ		177	CF	10.2	1.3	7.8	Tremolite			AFB>5, 3:1, PCMEF-US, PCMEF-ISO
G2	31	A7	AQ		178	CF	7.2	1.8	4	Tremolite			PCMEF-US, PCMEF-ISO
G2	31	A7	AQ		179	CF	4.35	0.8	5.4	Tremolite			
G2	31	A7	AQ	171	180	F	7	0.85	8.2	Tremolite			AS>5, 3:1, AFB>5, 3:1, PCMEF-US, PCMES-US, PCMEF-ISO, PCMES-ISO
G2	31	A7	AQ	172	181	F	5.75	0.35	16.4	Tremolite			AS>5, 3:1, AFB>5, 3:1, PCMEF-US, PCMES-US, PCMEF-ISO, PCMES-ISO
G2	31	A7	AQ	173	182	F	1.7	0.18	9.4	Tremolite			

Count Categories

AFB>5, 3:1	Asbestos Fibers and Bundles > 5um and 3:1	AS>5, 3:1	Asbestos Structures >5um and 3:1
PAS	Primary Asbestos Structures	PCMEF-ISO	PCM Equivalent Fibers-ISO
PCMEF-US	PCM Equivalent Fibers-NIOSH	PCMES-ISO	PCM Equivalent Structures-ISO
PCMES-US	PCM Equivalent Structures-NIOSH	TAS	Total Asbestos Structures

Lab/Cor, Inc.
7619 6th Ave Nw
Seattle, WA 98117

Final Report

Phone: (206) 781-0155
Fax: (206) 789-8424
http://www.labcor.net

A Professional Service Corporation in the Northwest

ISO 10312, Direct Raw Data

Job Number: 070434 **SEA**
Client: Idaho National Laboratory
Project Name: RARE

Report Number: 070434R06
Date Received: 4/23/2007

Client Sample No: **FB-2-R1** Lab/Cor Sample No: **S26**
Client Description: **Date Sampled: 4/16/2007**

Gr	No.	Loc.	ID	Prim	Tot	Class	Len	Wid	Asp	Analyte	Elements	Comment	Count Categories
G2	32	C7	AQ	174	183	F	20.65	3.8	5.4	Tremolite			AS>5, 3:1, AFB>5, 3:1, PCMEF-US, PCMES-US
G2	32	C7	AQ	175		MD 1-0	6	4	1.5	Tremolite			AS>5, 3:1
G2	32	C7	AQ		184	MF	3.5	1.2	2.9	Tremolite			
G2	32	C7	AQ	176	185	F	5.2	0.75	6.9	Tremolite			AS>5, 3:1, AFB>5, 3:1, PCMEF-US, PCMES-US, PCMEF-ISO, PCMES-ISO
G2	32	C7	AQ	177	186	F	5.5	1	5.5	Tremolite			AS>5, 3:1, AFB>5, 3:1, PCMEF-US, PCMES-US, PCMEF-ISO, PCMES-ISO
G2	32	C7	AQ	178		MD 1-1	7	3	2.3	Tremolite			AS>5, 3:1
G2	32	C7	AQ		187	MF	7	0.6	11.7	Tremolite			AFB>5, 3:1, PCMEF-US, PCMEF-ISO
G2	32	C7	AQ	179		MD 1-1	8	1.75	4.6	Tremolite			AS>5, 3:1, PCMES-US, PCMES-ISO
G2	32	C7	AQ		188	MF	8	0.75	10.7	Tremolite			AFB>5, 3:1, PCMEF-US, PCMEF-ISO
G2	32	C7	AQ	180		MD 1-1	29	10	2.9	Tremolite			AS>5, 3:1
G2	32	C7	AQ		189	MF	29	0.7	41.4	Tremolite			AFB>5, 3:1, PCMEF-US, PCMEF-ISO
G2	32	C7	AQ		190	MF	9	0.6	15	Tremolite			AFB>5, 3:1, PCMEF-US, PCMEF-ISO
G2	32	C7	AQ	181	191	F	8	0.55	14.5	Tremolite			AS>5, 3:1, AFB>5, 3:1, PCMEF-US, PCMES-US, PCMEF-ISO, PCMES-ISO
G2	33	E7	AQ	182	192	F	3.85	0.7	5.5	Tremolite			
G2	33	E7	AQ	183	193	F	14	3.8	3.7	Tremolite			PCMEF-US, PCMES-US
G2	33	E7	AQ	184	194	F	30	0.85	35.3	Tremolite			AS>5, 3:1, AFB>5, 3:1, PCMEF-US, PCMES-US, PCMEF-ISO, PCMES-ISO
G2	33	E7	AQ	185		MD 1-0	2.5	2	1.2	Tremolite			
G2	33	E7	AQ		195	MF	2.5	0.2	12.5	Tremolite			
G2	33	E7	AQ	186	196	F	9	2.2	4.1	Tremolite			PCMEF-US, PCMES-US, PCMEF-ISO, PCMES-ISO
G2	33	E7	AQ	187	197	F	8.2	1.25	6.6	Tremolite			AS>5, 3:1, AFB>5, 3:1, PCMEF-US, PCMES-US, PCMEF-ISO, PCMES-ISO
G2	33	E7	AQ	188		MD 1-0	7	5.52	1.3	Tremolite			AS>5, 3:1
G2	33	E7	AQ		198	MF	4.35	1	4.3	Tremolite			
G2	33	E7	AQ	189		MD 1-1	7	3.5	2	Tremolite			AS>5, 3:1
G2	33	E7	AQ		199	MF	6.85	1.2	5.7	Tremolite			AFB>5, 3:1, PCMEF-US, PCMEF-ISO
G2	33	E7	AQ	190	200	F	6	1.5	4	Tremolite			PCMEF-US, PCMES-US, PCMEF-ISO, PCMES-ISO

Count Categories

AFB>5, 3:1	Asbestos Fibers and Bundles > 5um and 3:1	AS>5, 3:1	Asbestos Structures >5um and 3:1
PAS	Primary Asbestos Structures	PCMEF-ISO	PCM Equivalent Fibers-ISO
PCMEF-US	PCM Equivalent Fibers-NIOSH	PCMES-ISO	PCM Equivalent Structures-ISO
PCMES-US	PCM Equivalent Structures-NIOSH	TAS	Total Asbestos Structures

Lab/Cor, Inc.
7619 6th Ave Nw
Seattle, WA 98117

Final Report

Phone: (206) 781-0155
Fax: (206) 789-8424
http://www.labcor.net

A Professional Service Corporation in the Northwest

ISO 10312, Direct Raw Data

Job Number: 070434 **SEA**
Client: Idaho National Laboratory
Project Name: RARE

Report Number: 070434R06
Date Received: 4/23/2007

Client Sample No: **FB-2-R1** Lab/Cor Sample No: **S26**
Client Description: **Date Sampled: 4/16/2007**

Gr	No.	Loc.	ID	Prim	Tot	Class	Len	Wid	Asp	Analyte	Elements	Comment	Count Categories
G2	33	E7	AQ	191	201	F	10	1	10	Tremolite			AS>5, 3:1, AFB>5, 3:1, PCMEF-US, PCMES-US, PCMEF-ISO, PCMES-ISO
G2	34	G7	AQ	192	202	F	11.2	1.1	10.2	Tremolite			AS>5, 3:1, AFB>5, 3:1, PCMEF-US, PCMES-US, PCMEF-ISO, PCMES-ISO
G2	34	G7	AQ	193	203	F	4.35	0.7	6.2	Tremolite			
G2	34	G7	AQ	194		MD 1-1	14	9	1.6	Tremolite			AS>5, 3:1
G2	34	G7	AQ		204	MF	10.3	2.2	4.7	Tremolite			PCMEF-US, PCMEF-ISO
G2	34	G7	AQ	195	205	F	5.12	0.55	9.3	Tremolite			AS>5, 3:1, AFB>5, 3:1, PCMEF-US, PCMES-US, PCMEF-ISO, PCMES-ISO
G2	35	I7	AQ	196		MD 1-0	15	8	1.9	Tremolite			AS>5, 3:1
G2	35	I7	AQ		206	MF	4.5	1.25	3.6	Tremolite			
G2	35	I7	AQ	197	207	F	7.2	0.4	18	Tremolite			AS>5, 3:1, AFB>5, 3:1, PCMEF-US, PCMES-US, PCMEF-ISO, PCMES-ISO
G2	35	I7	AQ	198		MD 1-1	8	5.8	1.4	Tremolite			AS>5, 3:1
G2	35	I7	AQ		208	MF	7.8	0.6	13	Tremolite			AFB>5, 3:1, PCMEF-US, PCMEF-ISO
G2	35	I7	AQ	199		MD 1-1	19	9	2.1	Tremolite			AS>5, 3:1
G2	35	I7	AQ		209	MF	17	3.8	4.5	Tremolite			PCMEF-US
G2	35	I7	AQ	200		MD 1-1	14	7	2	Tremolite			AS>5, 3:1
G2	35	I7	AQ		210	MF	14	0.7	20	Tremolite			AFB>5, 3:1, PCMEF-US, PCMEF-ISO

Count Categories

AFB>5, 3:1	Asbestos Fibers and Bundles > 5um and 3:1	AS>5, 3:1	Asbestos Structures >5um and 3:1
PAS	Primary Asbestos Structures	PCMEF-ISO	PCM Equivalent Fibers-ISO
PCMEF-US	PCM Equivalent Fibers-NIOSH	PCMES-ISO	PCM Equivalent Structures-ISO
PCMES-US	PCM Equivalent Structures-NIOSH	TAS	Total Asbestos Structures

Lab/Cor, Inc.
7619 6th Ave Nw
Seattle, WA 98117

Final Report

Phone: (206) 781-0155
Fax: (206) 789-8424
http://www.labcor.net

A Professional Service Corporation in the Northwest

ISO 10312, Direct Raw Data

Job Number: 070434 **SEA**
Client: Idaho National Laboratory
Project Name: RARE

Report Number: 070434R06
Date Received: 4/23/2007

Client Sample No: **FB-2-R2** Lab/Cor Sample No: **S27**
Client Description: **Date Sampled: 4/16/2007**

Gr	No.	Loc.	ID	Prim	Tot	Class	Len	Wid	Asp	Analyte	Elements	Comment	Count Categories
G1	1	A2	ADQ	1		MD 1-1	20	20	1	Tremolite	Mg, Al, Si, Ca, Fe		AS>5, 3:1
						ItemType	ItemNum				Confirmed	Comment	
						Brightfield	J3549 BF						
						Diffraction	J3549				KM 5/30/2007	5.3A IMAGE	
						Spectra	J2989						
G1	1	A2	ADQ		1	MF	8.7	0.75	11.6	Tremolite			AFB>5, 3:1, PCMEF-US, PCMEF-ISO
G1	1	A2	AZQ	2	2	F	4.3	0.6	7.2	Tremolite	Mg, Al, Si, Ca, Fe		
						ItemType	ItemNum				Confirmed	Comment	
						Brightfield	J3550 BF						
						Diffraction	J3550				KM 5/30/2007	ZONE AXIS [1 1 0]	
						Spectra	J2990						
G1	1	A2	AQ	3	3	F	22	3	7.3	Tremolite	Mg, Al, Si, Ca, Fe		AS>5, 3:1, AFB>5, 3:1, PCMEF-US, PCMES-US, PCMEF-ISO, PCMES-ISO
G1	1	A2	AQ	4		MD 1-0	5.5	2	2.8	Tremolite	Mg, Al, Si, Ca, Fe		AS>5, 3:1
G1	1	A2	AQ		4	MF	3.3	0.5	6.6	Tremolite			
G1	2	C2	AX	5	5	F	40	3.75	10.7	Tremolite			AS>5, 3:1, AFB>5, 3:1, PCMEF-US, PCMES-US
G1	2	C2	AX	6	6	F	7.85	1.15	6.8	Tremolite			AS>5, 3:1, AFB>5, 3:1, PCMEF-US, PCMES-US, PCMEF-ISO, PCMES-ISO
G1	2	C2	AX	7	7	F	20	1.75	11.4	Tremolite			AS>5, 3:1, AFB>5, 3:1, PCMEF-US, PCMES-US, PCMEF-ISO, PCMES-ISO
G1	2	C2	AX	8	8	F	3.1	0.6	5.2	Tremolite			
G1	3	E2	AX	9	9	F	1.5	0.2	7.5	Tremolite			
G1	3	E2	AX	10	10	F	6.2	1.75	3.5	Tremolite			PCMEF-US, PCMES-US, PCMEF-ISO, PCMES-ISO
G1	3	E2	AX	11	11	F	9	1.2	7.5	Tremolite			AS>5, 3:1, AFB>5, 3:1, PCMEF-US, PCMES-US, PCMEF-ISO, PCMES-ISO
G1	3	E2	AX	12		MD 2-1	20	18	1.1	Tremolite			AS>5, 3:1
						ItemType	ItemNum				Confirmed	Comment	
						Brightfield	J3551 BF						
G1	3	E2	AX		12	MF	15.25	1.7	9	Tremolite			AFB>5, 3:1, PCMEF-US, PCMEF-ISO
G1	3	E2	AX		13	MF	3.6	0.5	7.2	Tremolite			

Count Categories

AFB>5, 3:1	Asbestos Fibers and Bundles > 5um and 3:1	AS>5, 3:1	Asbestos Structures >5um and 3:1
PAS	Primary Asbestos Structures	PCMEF-ISO	PCM Equivalent Fibers-ISO
PCMEF-US	PCM Equivalent Fibers-NIOSH	PCMES-ISO	PCM Equivalent Structures-ISO
PCMES-US	PCM Equivalent Structures-NIOSH	TAS	Total Asbestos Structures

Lab/Cor, Inc.
7619 6th Ave Nw
Seattle, WA 98117

Final Report

Phone: (206) 781-0155
Fax: (206) 789-8424
http://www.labcor.net

A Professional Service Corporation in the Northwest

ISO 10312, Direct Raw Data

Job Number: 070434 **SEA**
Client: Idaho National Laboratory
Project Name: RARE

Report Number: 070434R06
Date Received: 4/23/2007

Client Sample No: **FB-2-R2** Lab/Cor Sample No: **S27**
Client Description: **Date Sampled: 4/16/2007**

Gr	No.	Loc.	ID	Prim	Tot	Class	Len	Wid	Asp	Analyte	Elements	Comment	Count Categories
G1	4	G2	AX	13	14	F	5.8	1.7	3.4	Tremolite			PCMEF-US, PCMES-US, PCMEF-ISO, PCMES-ISO
G1	4	G2	AX	14	15	F	4	0.9	4.4	Tremolite			
G1	4	G2	AX	15		MD 3-0	40	40	1	Tremolite	Mg, Al, Si, Ca, Fe		AS>5, 3:1
						ItemType	ItemNum				Confirmed	Comment	
						Brightfield	J3552 BF						
G1	4	G2	AX		16	MF	4	0.45	8.9	Tremolite			
G1	4	G2	AX		17	MF	3.8	0.8	4.8	Tremolite			
G1	4	G2	AX		18	MF	3.5	0.65	5.4	Tremolite			
G1	5	I2	AX	16	19	F	4	0.5	8	Tremolite			
G1	5	I2	AX	17	20	F	6.5	1.5	4.3	Tremolite			PCMEF-US, PCMES-US, PCMEF-ISO, PCMES-ISO
G1	5	I2	AX	18	21	F	4.7	1.5	3.1	Tremolite			
G1	5	I2	AX	19	22	F	6.5	0.37	17.6	Tremolite			AS>5, 3:1, AFB>5, 3:1, PCMEF-US, PCMES-US, PCMEF-ISO, PCMES-ISO
G1	5	I2	AX	20	23	F	8.2	0.55	14.9	Tremolite			AS>5, 3:1, AFB>5, 3:1, PCMEF-US, PCMES-US, PCMES-ISO, PCMEF-ISO
G1	5	I2	AX	21	24	F	1.5	0.4	3.8	Tremolite			
G1	5	I2	AX	22		MD 1-1	8.5	8	1.1	Tremolite			AS>5, 3:1
G1	5	I2	AX		25	MF	5.2	1.2	4.3	Tremolite			PCMEF-US, PCMEF-ISO
G1	5	I2	AX	23	26	F	11.35	2.15	5.3	Tremolite			AS>5, 3:1, AFB>5, 3:1, PCMEF-US, PCMES-US, PCMEF-ISO, PCMES-ISO
G1	6	J4	AX	24	27	F	4.35	0.65	6.7	Tremolite			
G1	6	J4	AX	25		MD 1-1	10	4.5	2.2	Tremolite			AS>5, 3:1
G1	6	J4	AX		28	MF	5.5	0.8	6.9	Tremolite			AFB>5, 3:1, PCMEF-US, PCMEF-ISO
G1	6	J4	AX	26		MD 1-0	5.5	3	1.8	Tremolite			AS>5, 3:1
G1	6	J4	AX		29	MF	1.7	0.3	5.7	Tremolite			
G1	6	J4	AX	27	30	F	7.7	0.75	10.3	Tremolite			AS>5, 3:1, AFB>5, 3:1, PCMEF-US, PCMES-US, PCMEF-ISO, PCMES-ISO
G1	6	J4	AX	28	31	F	5.25	1.75	3	Tremolite			PCMEF-US, PCMES-US, PCMEF-ISO, PCMES-ISO
G1	7	H4	AX	29	32	F	3	0.45	6.7	Tremolite			
G1	7	H4	AX	30	33	F	5.7	0.85	6.7	Tremolite			AS>5, 3:1, AFB>5, 3:1, PCMEF-US, PCMES-US, PCMEF-ISO, PCMES-ISO

Count Categories

AFB>5, 3:1	Asbestos Fibers and Bundles > 5um and 3:1	AS>5, 3:1	Asbestos Structures >5um and 3:1
PAS	Primary Asbestos Structures	PCMEF-ISO	PCM Equivalent Fibers-ISO
PCMEF-US	PCM Equivalent Fibers-NIOSH	PCMES-ISO	PCM Equivalent Structures-ISO
PCMES-US	PCM Equivalent Structures-NIOSH	TAS	Total Asbestos Structures

Lab/Cor, Inc.
7619 6th Ave Nw
Seattle, WA 98117

Final Report

Phone: (206) 781-0155
Fax: (206) 789-8424
http://www.labcor.net

A Professional Service Corporation in the Northwest

ISO 10312, Direct Raw Data

Job Number: 070434 **SEA**
Client: Idaho National Laboratory
Project Name: RARE

Report Number: 070434R06
Date Received: 4/23/2007

Client Sample No: **FB-2-R2** Lab/Cor Sample No: **S27**
Client Description: **Date Sampled: 4/16/2007**

Gr	No.	Loc.	ID	Prim	Tot	Class	Len	Wid	Asp	Analyte	Elements	Comment	Count Categories
G1	7	H4	AX	31	34	F	1.75	0.45	3.9	Tremolite			
G1	8	F4	AX	32	35	F	10.75	1.2	9	Tremolite			AS>5, 3:1, AFB>5, 3:1, PCMEF-US, PCMES-US, PCMEF-ISO, PCMES-ISO
G1	8	F4	AX	33	36	F	10.7	1.2	8.9	Tremolite			AS>5, 3:1, AFB>5, 3:1, PCMEF-US, PCMES-US, PCMEF-ISO, PCMES-ISO
G1	9	D4	AX	34	37	F	6	0.35	17.1	Tremolite			AFB>5, 3:1, AS>5, 3:1, PCMEF-US, PCMES-US, PCMEF-ISO, PCMES-ISO
G1	9	D4	AX	35	38	F	4.1	0.65	6.3	Tremolite			
G1	10	B4	AX	36	39	F	13.4	1.35	9.9	Tremolite			AS>5, 3:1, AFB>5, 3:1, PCMEF-US, PCMES-US, PCMEF-ISO, PCMES-ISO
G1	10	B4	AX	37	40	F	7.8	0.65	12	Tremolite			AS>5, 3:1, AFB>5, 3:1, PCMEF-US, PCMES-US, PCMEF-ISO, PCMES-ISO
G1	10	B4	AX	38		MD 2-1	9.35	5.65	1.7	Tremolite			AS>5, 3:1
G1	10	B4	AX		41	MF	8.35	0.35	23.9	Tremolite			AFB>5, 3:1, PCMEF-US, PCMEF-ISO
G1	10	B4	AX		42	MF	3.75	0.5	7.5	Tremolite			
G1	10	B4	AX	39	43	F	4.8	0.7	6.9	Tremolite			
G1	10	B4	AX	40		MD 1-1	7	5	1.4	Tremolite			AS>5, 3:1
G1	10	B4	AX		44	MF	5.5	0.75	7.3	Tremolite			AFB>5, 3:1, PCMEF-US, PCMEF-ISO
G1	11	A7	AX	41	45	F	3.85	0.6	6.4	Tremolite			
G1	11	A7	AX	42	46	F	6.5	1.8	3.6	Tremolite			PCMEF-US, PCMES-US, PCMEF-ISO, PCMES-ISO
G1	11	A7	AX	43	47	F	5	0.5	10	Tremolite			
G1	11	A7	AX	44	48	F	3	0.45	6.7	Tremolite			
G1	11	A7	AX	45		MD 1-1	8.5	5	1.7	Tremolite			AS>5, 3:1
G1	11	A7	AX		49	MF	6.5	0.85	7.6	Tremolite			AFB>5, 3:1, PCMEF-US, PCMEF-ISO
G1	11	A7	AX	46	50	F	5.85	1.2	4.9	Tremolite			PCMEF-US, PCMES-US, PCMEF-ISO, PCMES-ISO
G1	11	A7	AX	47	51	F	1.85	0.38	4.9	Tremolite			
G1	12	C7	AX	48	52	F	2.65	0.7	3.8	Tremolite			
G1	12	C7	AX	49		MD 2-1	14.5	12	1.2	Tremolite			AS>5, 3:1
G1	12	C7	AX		53	MF	9	0.8	11.2	Tremolite			AFB>5, 3:1, PCMEF-US, PCMEF-ISO
G1	12	C7	AX		54	MF	4.75	0.6	7.9	Tremolite			
G1	12	C7	AX	50		CD 2-1	8.5	5	1.7	Tremolite			AS>5, 3:1

Count Categories

AFB>5, 3:1	Asbestos Fibers and Bundles > 5um and 3:1	AS>5, 3:1	Asbestos Structures >5um and 3:1
PAS	Primary Asbestos Structures	PCMEF-ISO	PCM Equivalent Fibers-ISO
PCMEF-US	PCM Equivalent Fibers-NIOSH	PCMES-ISO	PCM Equivalent Structures-ISO
PCMES-US	PCM Equivalent Structures-NIOSH	TAS	Total Asbestos Structures

Lab/Cor, Inc.
7619 6th Ave Nw
Seattle, WA 98117

Final Report

Phone: (206) 781-0155
Fax: (206) 789-8424
http://www.labcor.net

A Professional Service Corporation in the Northwest

ISO 10312, Direct Raw Data

Job Number: 070434 **SEA**
Client: Idaho National Laboratory
Project Name: RARE

Report Number: 070434R06
Date Received: 4/23/2007

Client Sample No: **FB-2-R2** Lab/Cor Sample No: **S27**
Client Description: **Date Sampled: 4/16/2007**

Gr	No.	Loc.	ID	Prim	Tot	Class	Len	Wid	Asp	Analyte	Elements	Comment	Count Categories
G1	12	C7	AX		55	CF	8.2	1.85	4.4	Tremolite			PCMEF-US, PCMEF-ISO
G1	12	C7	AX		56	CF	4.8	0.55	8.7	Tremolite			
G1	12	C7	AX	51	57	F	24	1.5	16	Tremolite			AS>5, 3:1, AFB>5, 3:1, PCMEF-US, PCMES-US, PCMEF-ISO, PCMES-ISO
G1	13	E7	AX	52		MD 1-1	17.5	5	3.5	Tremolite			AS>5, 3:1, PCMES-US
G1	13	E7	AX		58	MF	10	1.5	6.7	Tremolite			AFB>5, 3:1, PCMEF-US, PCMEF-ISO
G1	13	E7	AX	53	59	F	3.15	0.25	12.6	Tremolite			
G1	13	E7	AX	54	60	F	4.8	0.85	5.6	Tremolite			
G1	13	E7	AX	55	61	F	4.5	1.2	3.7	Tremolite			
G1	14	G7	AX	56	62	F	6.5	1.75	3.7	Tremolite			PCMEF-US, PCMES-US, PCMEF-ISO, PCMES-ISO
G1	15	I7	AX	57	63	F	4.65	0.7	6.6	Tremolite			
G1	15	I7	AX	58	64	F	12	0.8	15	Tremolite			AS>5, 3:1, AFB>5, 3:1, PCMEF-US, PCMES-US, PCMEF-ISO, PCMES-ISO
G1	15	I7	AX	59	65	F	11.35	2	5.7	Tremolite			AS>5, 3:1, AFB>5, 3:1, PCMEF-US, PCMES-US, PCMEF-ISO, PCMES-ISO
G1	15	I7	AX	60	66	F	12	1.8	6.7	Tremolite			AS>5, 3:1, AFB>5, 3:1, PCMEF-US, PCMES-US, PCMEF-ISO, PCMES-ISO
G1	15	I7	AX	61	67	F	3.45	0.4	8.6	Tremolite			
G1	15	I7	AX	62	68	F	4.35	0.25	17.4	Tremolite			
G1	16	J9	AX	63	69	F	16.85	1.65	10.2	Tremolite			AS>5, 3:1, AFB>5, 3:1, PCMEF-US, PCMES-US, PCMEF-ISO, PCMES-ISO
G1	16	J9	AX	64	70	F	7	1.5	4.7	Tremolite			PCMEF-US, PCMES-US, PCMEF-ISO, PCMES-ISO
G1	16	J9	AX	65	71	F	4	0.55	7.3	Tremolite			
G1	16	J9	AX	66	72	F	3.12	0.65	4.8	Tremolite			
G1	16	J9	AX	67	73	F	4	0.6	6.7	Tremolite			
G1	17	H9	AX	68	74	F	17.5	1.45	12.1	Tremolite			AS>5, 3:1, AFB>5, 3:1, PCMEF-US, PCMES-US, PCMEF-ISO, PCMES-ISO
G1	17	H9	AX	69	75	F	16	4	4	Tremolite			PCMEF-US, PCMES-US
G1	17	H9	AX	70	76	F	4	1.3	3.1	Tremolite			
G1	17	H9	AX	71		MD 1-1	6.25	3.8	1.6	Tremolite			AS>5, 3:1
G1	17	H9	AX		77	MF	5.12	0.5	10.2	Tremolite			AFB>5, 3:1, PCMEF-US, PCMEF-ISO

Count Categories

AFB>5, 3:1	Asbestos Fibers and Bundles > 5um and 3:1	AS>5, 3:1	Asbestos Structures >5um and 3:1
PAS	Primary Asbestos Structures	PCMEF-ISO	PCM Equivalent Fibers-ISO
PCMEF-US	PCM Equivalent Fibers-NIOSH	PCMES-ISO	PCM Equivalent Structures-ISO
PCMES-US	PCM Equivalent Structures-NIOSH	TAS	Total Asbestos Structures

Lab/Cor, Inc.
7619 6th Ave Nw
Seattle, WA 98117

Final Report

Phone: (206) 781-0155
Fax: (206) 789-8424
http://www.labcor.net

A Professional Service Corporation in the Northwest

ISO 10312, Direct Raw Data

Job Number: 070434 **SEA**
Client: Idaho National Laboratory
Project Name: RARE

Report Number: 070434R06
Date Received: 4/23/2007

Client Sample No: **FB-2-R2** Lab/Cor Sample No: **S27**
Client Description: **Date Sampled: 4/16/2007**

Gr	No.	Loc.	ID	Prim	Tot	Class	Len	Wid	Asp	Analyte	Elements	Comment	Count Categories
G1	17	H9	AX	72	78	F	14.25	1.7	8.4	Tremolite			AS>5, 3:1, AFB>5, 3:1, PCMEF-US, PCMES-US, PCMEF-ISO, PCMES-ISO
G1	17	H9	AX	73	79	F	3.2	0.8	4	Tremolite			
G1	17	H9	AX	74	80	F	17	1.7	10	Tremolite			AS>5, 3:1, AFB>5, 3:1, PCMEF-US, PCMES-US, PCMEF-ISO, PCMES-ISO
G1	18	F9	AX	75	81	F	15	0.38	39.5	Tremolite			AS>5, 3:1, AFB>5, 3:1, PCMEF-US, PCMES-US, PCMEF-ISO, PCMES-ISO
G1	18	F9	AX	76	82	B	32.5	1.15	28.3	Tremolite			AFB>5, 3:1, AS>5, 3:1, PCMES-US, PCMEF-US, PCMES-ISO, PCMEF-ISO
G1	18	F9	AX	77	83	F	1	0.7	1.4	Tremolite			
G1	18	F9	AX	78		MD 1-1	16	4.5	3.6	Tremolite			AS>5, 3:1, PCMES-US
G1	18	F9	AX		84	MF	12	1.7	7.1	Tremolite			AFB>5, 3:1, PCMEF-US, PCMEF-ISO
G1	18	F9	AX	79		MD 1-1	23	15	1.5	Tremolite			AS>5, 3:1
G1	18	F9	AX		85	MF	14	0.5	28	Tremolite			AFB>5, 3:1, PCMEF-US, PCMEF-ISO
G1	18	F9	AX		86	MF	14	1	14	Tremolite			AFB>5, 3:1, PCMEF-US, PCMEF-ISO
G1	19	D9	AX	80		MD 1-1	23	4.5	5.1	Tremolite			AS>5, 3:1, PCMES-US
G1	19	D9	AX		87	MF	13.4	2	6.7	Tremolite			AFB>5, 3:1, PCMEF-US, PCMEF-ISO
G1	19	D9	AX	81		MD 1-1	10.5	2.5	4.2	Tremolite			AS>5, 3:1, PCMES-US, PCMES-ISO
G1	19	D9	AX		88	MF	5.5	0.6	9.2	Tremolite			AFB>5, 3:1, PCMEF-US, PCMEF-ISO
G1	19	D9	AX	82		MD 1-1	16	5.5	2.9	Tremolite			AS>5, 3:1
G1	19	D9	AX		89	MF	16	0.65	24.6	Tremolite			AFB>5, 3:1, PCMEF-US, PCMEF-ISO
G1	19	D9	AX	83	90	F	2.2	0.7	3.1	Tremolite			
G1	19	D9	AX	84	91	F	15.3	2	7.7	Tremolite			AFB>5, 3:1, AS>5, 3:1, PCMEF-US, PCMES-US, PCMEF-ISO, PCMES-ISO
G1	19	D9	AX	85	92	F	4.9	0.6	8.2	Tremolite			
G1	19	D9	AX	86	93	F	1.8	0.3	6	Tremolite			
G1	19	D9	AX	87	94	F	5.2	0.8	6.5	Tremolite			AS>5, 3:1, AFB>5, 3:1, PCMEF-US, PCMES-US, PCMEF-ISO, PCMES-ISO
G1	19	D9	AX	88	95	F	5.7	1.45	3.9	Tremolite			PCMEF-US, PCMES-US, PCMEF-ISO, PCMES-ISO

Count Categories

AFB>5, 3:1	Asbestos Fibers and Bundles > 5um and 3:1	AS>5, 3:1	Asbestos Structures >5um and 3:1
PAS	Primary Asbestos Structures	PCMEF-ISO	PCM Equivalent Fibers-ISO
PCMEF-US	PCM Equivalent Fibers-NIOSH	PCMES-ISO	PCM Equivalent Structures-ISO
PCMES-US	PCM Equivalent Structures-NIOSH	TAS	Total Asbestos Structures

Lab/Cor, Inc.
7619 6th Ave Nw
Seattle, WA 98117

Final Report

Phone: (206) 781-0155
Fax: (206) 789-8424
http://www.labcor.net

A Professional Service Corporation in the Northwest

ISO 10312, Direct Raw Data

Job Number: 070434 **SEA**
Client: Idaho National Laboratory
Project Name: RARE

Report Number: 070434R06
Date Received: 4/23/2007

Client Sample No: **FB-2-R2** Lab/Cor Sample No: **S27**
Client Description: **Date Sampled: 4/16/2007**

Gr	No.	Loc.	ID	Prim	Tot	Class	Len	Wid	Asp	Analyte	Elements	Comment	Count Categories
G1	20	B9	AX	89	96	F	10.4	1.5	6.9	Tremolite			AS>5, 3:1, AFB>5, 3:1, PCMES-US, PCMEF-US, PCMEF-ISO, PCMES-ISO
G1	20	B9	AX	90	97	F	6.35	2	3.2	Tremolite			PCMEF-US, PCMES-US, PCMEF-ISO, PCMES-ISO
G1	20	B9	AX	91	98	F	6	0.5	12	Tremolite			AS>5, 3:1, AFB>5, 3:1, PCMEF-US, PCMES-US, PCMEF-ISO, PCMES-ISO
G2	21	A2	AX	92	99	F	4.5	1.2	3.7	Tremolite			
G2	21	A2	AX	93	100	F	12	2.7	4.4	Tremolite			PCMEF-US, PCMES-US, PCMEF-ISO, PCMES-ISO
G2	21	A2	AX	94	101	F	1.65	0.22	7.5	Tremolite			
G2	21	A2	AX	95	102	F	7.8	1.5	5.2	Tremolite			AS>5, 3:1, AFB>5, 3:1, PCMEF-US, PCMES-US, PCMEF-ISO, PCMES-ISO
G2	21	A2	AX	96	103	F	8	0.6	13.3	Tremolite			AS>5, 3:1, AFB>5, 3:1, PCMEF-US, PCMES-US, PCMEF-ISO, PCMES-ISO
G2	21	A2	AX	97	104	F	4.25	0.55	7.7	Tremolite			
G2	22	C2	AX	98	105	F	17	2	8.5	Tremolite			AS>5, 3:1, AFB>5, 3:1, PCMEF-US, PCMES-US, PCMEF-ISO, PCMES-ISO
G2	22	C2	AX	99	106	F	27	4	6.8	Tremolite			AS>5, 3:1, AFB>5, 3:1, PCMEF-US, PCMES-US
G2	22	C2	AX	100	107	F	27.5	2	13.8	Tremolite			AS>5, 3:1, AFB>5, 3:1, PCMEF-US, PCMES-US, PCMEF-ISO, PCMES-ISO
G2	22	C2	AX	101	108	F	19.5	1.75	11.1	Tremolite			AS>5, 3:1, AFB>5, 3:1, PCMEF-US, PCMES-US, PCMEF-ISO, PCMES-ISO
G2	22	C2	AX	102	109	F	24.75	4.5	5.5	Tremolite			AS>5, 3:1, AFB>5, 3:1, PCMEF-US, PCMES-US
G2	22	C2	AX	103	110	F	6	2	3	Tremolite			PCMEF-US, PCMES-US, PCMEF-ISO, PCMES-ISO
G2	23	E2	AX	104	111	F	5.2	0.55	9.5	Tremolite			AS>5, 3:1, AFB>5, 3:1, PCMEF-US, PCMES-US, PCMEF-ISO, PCMES-ISO
G2	23	E2	AX	105	112	F	1.7	0.55	3.1	Tremolite			
G2	23	E2	AX	106	113	F	4.35	1.2	3.6	Tremolite			
G2	23	E2	AX	107	114	F	18.63	0.75	24.8	Tremolite			AS>5, 3:1, AFB>5, 3:1, PCMEF-US, PCMES-US, PCMEF-ISO, PCMES-ISO
G2	24	G2	AX	108	115	F	4.35	0.6	7.2	Tremolite			
G2	24	G2	AX	109	116	F	3.85	0.7	5.5	Tremolite			

Count Categories

AFB>5, 3:1	Asbestos Fibers and Bundles > 5um and 3:1	AS>5, 3:1	Asbestos Structures >5um and 3:1
PAS	Primary Asbestos Structures	PCMEF-ISO	PCM Equivalent Fibers-ISO
PCMEF-US	PCM Equivalent Fibers-NIOSH	PCMES-ISO	PCM Equivalent Structures-ISO
PCMES-US	PCM Equivalent Structures-NIOSH	TAS	Total Asbestos Structures

Lab/Cor, Inc.
7619 6th Ave Nw
Seattle, WA 98117

Final Report

Phone: (206) 781-0155
Fax: (206) 789-8424
http://www.labcor.net

A Professional Service Corporation in the Northwest

ISO 10312, Direct Raw Data

Job Number: 070434 **SEA**
Client: Idaho National Laboratory
Project Name: RARE

Report Number: 070434R06
Date Received: 4/23/2007

Client Sample No: **FB-2-R2** Lab/Cor Sample No: **S27**
Client Description: **Date Sampled: 4/16/2007**

Gr	No.	Loc.	ID	Prim	Tot	Class	Len	Wid	Asp	Analyte	Elements	Comment	Count Categories
G2	24	G2	AX	110	117	F	11.2	1.2	9.3	Tremolite			AS>5, 3:1, AFB>5, 3:1, PCMEF-US, PCMES-US, PCMEF-ISO, PCMES-ISO
G2	24	G2	AX	111	118	F	26	3.25	8	Tremolite			AS>5, 3:1, AFB>5, 3:1, PCMEF-US, PCMES-US
G2	24	G2	AX	112	119	F	3.15	0.3	10.5	Tremolite			
G2	24	G2	AX	113	120	F	14.52	2.5	5.8	Tremolite			AS>5, 3:1, AFB>5, 3:1, PCMEF-US, PCMES-US, PCMEF-ISO, PCMES-ISO
G2	24	G2	AX	114	121	F	17	1.75	9.7	Tremolite			AS>5, 3:1, AFB>5, 3:1, PCMEF-US, PCMES-US, PCMEF-ISO, PCMES-ISO
G2	24	G2	AX	115	122	F	13.2	3	4.4	Tremolite			PCMEF-US, PCMES-US, PCMEF-ISO, PCMES-ISO
G2	25	I2	AX	116	123	F	25	0.65	38.5	Tremolite			AS>5, 3:1, AFB>5, 3:1, PCMEF-US, PCMES-US, PCMEF-ISO, PCMES-ISO
G2	25	I2	AX	117	124	F	10	1.2	8.3	Tremolite			AS>5, 3:1, AFB>5, 3:1, PCMEF-US, PCMES-US, PCMEF-ISO, PCMES-ISO
G2	25	I2	AX	118	125	F	4.3	0.8	5.4	Tremolite			
G2	25	I2	AX	119	126	F	22	1	22	Tremolite			AS>5, 3:1, AFB>5, 3:1, PCMEF-US, PCMES-US, PCMEF-ISO, PCMES-ISO
G2	25	I2	AX	120	127	F	9.2	0.55	16.7	Tremolite			AS>5, 3:1, AFB>5, 3:1, PCMEF-US, PCMES-US, PCMEF-ISO, PCMES-ISO
G2	25	I2	AX	121	128	F	12.2	3.2	3.8	Tremolite			PCMEF-US, PCMES-US
G2	25	I2	AX	122	129	F	18.5	1.1	16.8	Tremolite			AS>5, 3:1, AFB>5, 3:1, PCMEF-US, PCMES-US, PCMEF-ISO, PCMES-ISO
G2	26	J4	AX	123	130	F	3.2	0.7	4.6	Tremolite			
G2	26	J4	AX	124	131	F	3.5	0.6	5.8	Tremolite			
G2	26	J4	AX	125	132	F	4.2	0.35	12	Tremolite			
G2	26	J4	AX	126	133	F	6.5	0.45	14.4	Tremolite			AS>5, 3:1, AFB>5, 3:1, PCMEF-US, PCMES-US, PCMEF-ISO, PCMES-ISO
G2	27	H4	AX	127	134	F	4.75	0.65	7.3	Tremolite			
G2	27	H4	AX	128	135	F	7.75	2.5	3.1	Tremolite			PCMES-US, PCMEF-US, PCMEF-ISO, PCMES-ISO
G2	27	H4	AX	129		MD 2-1	12.5	9	1.4	Tremolite			AS>5, 3:1
G2	27	H4	AX		136	MF	12.5	0.85	14.7	Tremolite			AFB>5, 3:1, PCMEF-US, PCMEF-ISO
G2	27	H4	AX		137	MF	1.85	0.3	6.2	Tremolite			
G2	27	H4	AX	130	138	F	3	0.35	8.6	Tremolite			

Count Categories

AFB>5, 3:1	Asbestos Fibers and Bundles > 5um and 3:1	AS>5, 3:1	Asbestos Structures >5um and 3:1
PAS	Primary Asbestos Structures	PCMEF-ISO	PCM Equivalent Fibers-ISO
PCMEF-US	PCM Equivalent Fibers-NIOSH	PCMES-ISO	PCM Equivalent Structures-ISO
PCMES-US	PCM Equivalent Structures-NIOSH	TAS	Total Asbestos Structures

Lab/Cor, Inc.
7619 6th Ave Nw
Seattle, WA 98117

Final Report

Phone: (206) 781-0155
Fax: (206) 789-8424
http://www.labcor.net

A Professional Service Corporation in the Northwest

ISO 10312, Direct Raw Data

Job Number: 070434 **SEA**
Client: Idaho National Laboratory
Project Name: RARE

Report Number: 070434R06
Date Received: 4/23/2007

Client Sample No: **FB-2-R2** Lab/Cor Sample No: **S27**
Client Description: **Date Sampled: 4/16/2007**

Gr	No.	Loc.	ID	Prim	Tot	Class	Len	Wid	Asp	Analyte	Elements	Comment	Count Categories
G2	27	H4	AX	131	139	F	4.35	1.12	3.9	Tremolite			
G2	28	F4	AX	132	140	F	25	0.7	35.7	Tremolite			AS>5, 3:1, AFB>5, 3:1, PCMEF-US, PCMES-US, PCMEF-ISO, PCMES-ISO
G2	29	D4	AX	133	141	F	48.5	1.85	26.2	Tremolite			AFB>5, 3:1, AS>5, 3:1, PCMEF-US, PCMES-US, PCMEF-ISO, PCMES-ISO
G2	29	D4	AX	134	142	F	10	2.1	4.8	Tremolite			PCMEF-US, PCMES-US, PCMEF-ISO, PCMES-ISO
G2	29	D4	AX	135		MD 1-1	8.5	3.5	2.4	Tremolite			AS>5, 3:1
G2	29	D4	AX		143	MF	5.85	0.5	11.7	Tremolite			AFB>5, 3:1, PCMEF-US, PCMEF-ISO
G2	29	D4	AX	136	144	F	38	1.5	25.3	Tremolite			AS>5, 3:1, AFB>5, 3:1, PCMEF-US, PCMES-US, PCMEF-ISO, PCMES-ISO
G2	29	D4	AX	137		MD 1-1	13	10	1.3	Tremolite			AS>5, 3:1
G2	29	D4	AX		145	MF	13	0.7	18.6	Tremolite			AFB>5, 3:1, PCMEF-US, PCMEF-ISO
G2	29	D4	AX	138		MD 1-0	3.5	1.25	2.8	Tremolite			
G2	29	D4	AX		146	MF	3.5	0.45	7.8	Tremolite			
G2	29	D4	AX	139	147	F	10.3	1	10.3	Tremolite			AS>5, 3:1, AFB>5, 3:1, PCMEF-US, PCMES-US, PCMEF-ISO, PCMES-ISO
G2	29	D4	AX	140	148	F	2.7	1.35	2	Tremolite			
G2	30	B4	AX	141	149	F	9.2	1.2	7.7	Tremolite			AS>5, 3:1, AFB>5, 3:1, PCMEF-US, PCMES-US, PCMEF-ISO, PCMES-ISO
G2	30	B4	AX	142	150	F	14	1.7	8.2	Tremolite			AS>5, 3:1, AFB>5, 3:1, PCMEF-US, PCMES-US, PCMEF-ISO, PCMES-ISO
G2	31	A7	AX	143	151	F	5.6	0.7	8	Tremolite			AS>5, 3:1, AFB>5, 3:1, PCMEF-US, PCMES-US, PCMEF-ISO, PCMES-ISO
G2	31	A7	AX	144	152	F	7.5	0.75	10	Tremolite			AS>5, 3:1, AFB>5, 3:1, PCMEF-US, PCMES-US, PCMEF-ISO, PCMES-ISO
G2	31	A7	AX	145	153	F	4.9	0.25	19.6	Tremolite			
G2	31	A7	AX	146	154	F	15.7	2	7.8	Tremolite			AS>5, 3:1, AFB>5, 3:1, PCMEF-US, PCMES-US, PCMEF-ISO, PCMES-ISO
G2	31	A7	AX	147	155	F	5.65	0.6	9.4	Tremolite			AS>5, 3:1, AFB>5, 3:1, PCMEF-US, PCMES-US, PCMEF-ISO, PCMES-ISO
G2	32	C7	AX	148	156	F	8.4	0.55	15.3	Tremolite			AS>5, 3:1, AFB>5, 3:1, PCMEF-US, PCMES-US, PCMEF-ISO, PCMES-ISO

Count Categories

AFB>5, 3:1	Asbestos Fibers and Bundles > 5um and 3:1	AS>5, 3:1	Asbestos Structures >5um and 3:1
PAS	Primary Asbestos Structures	PCMEF-ISO	PCM Equivalent Fibers-ISO
PCMEF-US	PCM Equivalent Fibers-NIOSH	PCMES-ISO	PCM Equivalent Structures-ISO
PCMES-US	PCM Equivalent Structures-NIOSH	TAS	Total Asbestos Structures

Lab/Cor, Inc.
7619 6th Ave Nw
Seattle, WA 98117

Final Report

Phone: (206) 781-0155
Fax: (206) 789-8424
http://www.labcor.net

A Professional Service Corporation in the Northwest

ISO 10312, Direct Raw Data

Job Number: 070434 **SEA**
Client: Idaho National Laboratory
Project Name: RARE

Report Number: 070434R06
Date Received: 4/23/2007

Client Sample No: **FB-2-R2** Lab/Cor Sample No: **S27**
Client Description: **Date Sampled: 4/16/2007**

Gr	No.	Loc.	ID	Prim	Tot	Class	Len	Wid	Asp	Analyte	Elements	Comment	Count Categories
G2	33	E7	AX	149	157	F	3	0.45	6.7	Tremolite			
G2	33	E7	AX	150	158	F	7.8	0.8	9.8	Tremolite			AS>5, 3:1, AFB>5, 3:1, PCMEF-US, PCMES-US, PCMEF-ISO, PCMES-ISO
G2	33	E7	AX	151	159	F	16	3.75	4.3	Tremolite			PCMEF-US, PCMES-US
G2	33	E7	AX	152	160	F	2.2	0.65	3.4	Tremolite			
G2	33	E7	AX	153	161	F	17.5	2.25	7.8	Tremolite			AS>5, 3:1, AFB>5, 3:1, PCMEF-US, PCMES-US, PCMEF-ISO, PCMES-ISO
G2	33	E7	AX	154	162	F	4.25	0.5	8.5	Tremolite			
G2	34	G7				NSD							
G2	35	I7	AX	155	163	F	5.5	0.6	9.2	Tremolite			AS>5, 3:1, AFB>5, 3:1, PCMEF-US, PCMES-US, PCMEF-ISO, PCMES-ISO
G2	35	I7	AX	156		MD 2-0	5.8	5.25	1.1	Tremolite			AS>5, 3:1
G2	35	I7	AX		164	MF	3.8	1.2	3.2	Tremolite			
G2	35	I7	AX		165	MF	3.2	0.6	5.3	Tremolite			
G2	35	I7	AX	157	166	F	8.4	0.65	12.9	Tremolite			AS>5, 3:1, AFB>5, 3:1, PCMEF-US, PCMES-US, PCMEF-ISO, PCMES-ISO

Count Categories

AFB>5, 3:1	Asbestos Fibers and Bundles > 5um and 3:1	AS>5, 3:1	Asbestos Structures >5um and 3:1
PAS	Primary Asbestos Structures	PCMEF-ISO	PCM Equivalent Fibers-ISO
PCMEF-US	PCM Equivalent Fibers-NIOSH	PCMES-ISO	PCM Equivalent Structures-ISO
PCMES-US	PCM Equivalent Structures-NIOSH	TAS	Total Asbestos Structures

Lab/Cor, Inc.
7619 6th Ave Nw
Seattle, WA 98117

Final Report

Phone: (206) 781-0155
Fax: (206) 789-8424
http://www.labcor.net

A Professional Service Corporation in the Northwest

ISO 10312, Direct Raw Data

Job Number: 070434 **SEA**
Client: Idaho National Laboratory
Project Name: RARE

Report Number: 070434R06
Date Received: 4/23/2007

Client Sample No: **FB-2-R3** Lab/Cor Sample No: **S28**
Client Description: **Date Sampled: 4/16/2007**

Gr	No.	Loc.	ID	Prim	Tot	Class	Len	Wid	Asp	Analyte	Elements	Comment	Count Categories
G1	1	A2	NAM	1	1	F	19	1.1	17.3	Non Asbestos Mineral	Mg, Al, Si, Fe		
						ItemType	ItemNum				Confirmed	Comment	
						Brightfield	J3570 BF						
						Diffraction	J3570					POSSIBLE TALC - HEXAGONAL PATTERN	
						Spectra	J3008						
G1	1	A2	AQ	2	2	F	4	0.45	8.9	Tremolite	Mg, Si, Fe		
						ItemType	ItemNum				Confirmed	Comment	
						Spectra	J3009						
G1	1	A2	AZQ	3	3	F	7	0.65	10.8	Tremolite	Mg, Al, Si, Ca, Fe		AS>5, 3:1, AFB>5, 3:1, PCMEF-US, PCMES-US, PCMEF-ISO, PCMES-ISO
						ItemType	ItemNum				Confirmed	Comment	
						Brightfield	J3571 BF						
						Diffraction	J3571				KM 6/4/2007	ZONE AXIS [1 0 1]	
						Spectra	J3010						
G1	1	A2	AQ	4	4	F	17	1.1	15.5	Tremolite			AS>5, 3:1, AFB>5, 3:1, PCMEF-US, PCMES-US, PCMEF-ISO, PCMES-ISO
G1	1	A2	AQ	5	5	F	4.1	1.1	3.7	Tremolite			
G1	1	A2	AQ	6	6	F	8	0.7	11.4	Tremolite			AS>5, 3:1, AFB>5, 3:1, PCMEF-US, PCMES-US, PCMEF-ISO, PCMES-ISO
G1	2	C2	AQ	7	7	F	1.7	0.15	11.3	Tremolite			
G1	2	C2	AQ	8	8	F	6.35	0.45	14.1	Tremolite			AS>5, 3:1, AFB>5, 3:1, PCMEF-US, PCMES-US, PCMEF-ISO, PCMES-ISO
G1	2	C2	AQ	9	9	F	2.8	0.4	7	Tremolite			
G1	2	C2	AQ	10	10	F	7.75	1.12	6.9	Tremolite			AS>5, 3:1, AFB>5, 3:1, PCMEF-US, PCMES-US, PCMEF-ISO, PCMES-ISO
G1	2	C2	AD	11	11	F	10.5	0.7	15	Tremolite			AS>5, 3:1, AFB>5, 3:1, PCMEF-US, PCMES-US, PCMEF-ISO, PCMES-ISO
G1	2	C2	AD	12		MD 1-0	7	6	1.2	Tremolite			AS>5, 3:1
G1	2	C2	AD		12	MF	3.75	0.45	8.3	Tremolite			
G1	3	E2	AD	13	13	F	2.7	0.4	6.8	Tremolite			
G1	3	E2	AD	14	14	F	2.75	0.8	3.4	Tremolite			

Count Categories

AFB>5, 3:1	Asbestos Fibers and Bundles > 5um and 3:1	AS>5, 3:1	Asbestos Structures >5um and 3:1
PAS	Primary Asbestos Structures	PCMEF-ISO	PCM Equivalent Fibers-ISO
PCMEF-US	PCM Equivalent Fibers-NIOSH	PCMES-ISO	PCM Equivalent Structures-ISO
PCMES-US	PCM Equivalent Structures-NIOSH	TAS	Total Asbestos Structures

Lab/Cor, Inc.
7619 6th Ave Nw
Seattle, WA 98117

Final Report

Phone: (206) 781-0155
Fax: (206) 789-8424
http://www.labcor.net

A Professional Service Corporation in the Northwest

ISO 10312, Direct Raw Data

Job Number: 070434 **SEA**
Client: Idaho National Laboratory
Project Name: RARE

Report Number: 070434R06
Date Received: 4/23/2007

Client Sample No: **FB-2-R3** Lab/Cor Sample No: **S28**
Client Description: **Date Sampled: 4/16/2007**

Gr	No.	Loc.	ID	Prim	Tot	Class	Len	Wid	Asp	Analyte	Elements	Comment	Count Categories
G1	3	E2	AD	15	15	F	13	0.75	17.3	Tremolite			AS>5, 3:1, AFB>5, 3:1, PCMEF-US, PCMES-US, PCMEF-ISO, PCMES-ISO
G1	3	E2	AD	16	16	F	0.7	0.15	4.7	Tremolite			
G1	3	E2	AD	17	17	F	7.58	1	7.6	Tremolite			AS>5, 3:1, AFB>5, 3:1, PCMEF-US, PCMES-US, PCMEF-ISO, PCMES-ISO
G1	3	E2	AD	18	18	F	5.7	0.8	7.1	Tremolite			AFB>5, 3:1, AS>5, 3:1, PCMEF-US, PCMES-US, PCMEF-ISO, PCMES-ISO
G1	3	E2	AD	19	19	F	4.75	1.1	4.3	Tremolite			
G1	3	E2	AD	20	20	F	7	0.45	15.6	Tremolite			AS>5, 3:1, AFB>5, 3:1, PCMEF-US, PCMES-US, PCMEF-ISO, PCMES-ISO
G1	4	G2	AD	21	21	F	6	1	6	Tremolite			AS>5, 3:1, AFB>5, 3:1, PCMEF-US, PCMES-US, PCMEF-ISO, PCMES-ISO
G1	4	G2	AD	22	22	F	2.7	0.7	3.9	Tremolite			
G1	4	G2	AD	23		MD 1-0	6	1.5	4	Tremolite			AS>5, 3:1, PCMES-US, PCMES-ISO
G1	4	G2	AD		23	MF	3.2	0.4	8	Tremolite			
G1	4	G2	AD	24	24	F	9.8	1.65	5.9	Tremolite			AS>5, 3:1, AFB>5, 3:1, PCMEF-US, PCMES-US, PCMEF-ISO, PCMES-ISO
G1	4	G2	AD	25	25	F	3.2	0.7	4.6	Tremolite			
G1	4	G2	AD	26	26	F	3.2	0.45	7.1	Tremolite			
G1	4	G2	AD	27	27	B	5	0.7	7.1	Tremolite			
G1	5	I2	AD	28	28	F	1.75	0.3	5.8	Tremolite			
G1	5	I2	AD	29	29	F	2.7	0.5	5.4	Tremolite			
G1	5	I2	AD	30	30	F	23	4	5.8	Tremolite			AS>5, 3:1, AFB>5, 3:1, PCMEF-US, PCMES-US
G1	5	I2	AD	31	31	F	1.25	0.35	3.6	Tremolite			
G1	5	I2	AD	32	32	F	12.5	0.85	14.7	Tremolite			AS>5, 3:1, AFB>5, 3:1, PCMEF-US, PCMES-US, PCMEF-ISO, PCMES-ISO
G1	5	I2	AD	33	33	F	5.5	0.65	8.5	Tremolite			AS>5, 3:1, AFB>5, 3:1, PCMEF-US, PCMES-US, PCMEF-ISO, PCMES-ISO
G1	5	I2	AD	34	34	F	20	4.3	4.7	Tremolite			PCMEF-US, PCMES-US
G1	5	I2	AD	35	35	F	1.7	0.25	6.8	Tremolite			
G1	5	I2	AD	36	36	F	5	1.45	3.4	Tremolite			
G1	6	J4	AD	37	37	F	1.12	0.15	7.5	Tremolite			
G1	6	J4	AD	38	38	F	2.7	0.5	5.4	Tremolite			

Count Categories

AFB>5, 3:1	Asbestos Fibers and Bundles > 5um and 3:1	AS>5, 3:1	Asbestos Structures >5um and 3:1
PAS	Primary Asbestos Structures	PCMEF-ISO	PCM Equivalent Fibers-ISO
PCMEF-US	PCM Equivalent Fibers-NIOSH	PCMES-ISO	PCM Equivalent Structures-ISO
PCMES-US	PCM Equivalent Structures-NIOSH	TAS	Total Asbestos Structures

Lab/Cor, Inc.
7619 6th Ave Nw
Seattle, WA 98117

Final Report

Phone: (206) 781-0155
Fax: (206) 789-8424
http://www.labcor.net

A Professional Service Corporation in the Northwest

ISO 10312, Direct Raw Data

Job Number: 070434 **SEA**
Client: Idaho National Laboratory
Project Name: RARE

Report Number: 070434R06
Date Received: 4/23/2007

Client Sample No: **FB-2-R3** Lab/Cor Sample No: **S28**
Client Description: **Date Sampled: 4/16/2007**

Gr	No.	Loc.	ID	Prim	Tot	Class	Len	Wid	Asp	Analyte	Elements	Comment	Count Categories
G1	6	J4	AD	39	39	F	12.5	0.65	19.2	Tremolite			AS>5, 3:1, AFB>5, 3:1, PCMEF-US, PCMES-US, PCMEF-ISO, PCMES-ISO
G1	6	J4	AD	40	40	F	3.1	0.7	4.4	Tremolite			
G1	6	J4	AD	41	41	F	3	0.7	4.3	Tremolite			
G1	6	J4	AD	42	42	F	4.5	0.35	12.9	Tremolite			
G1	7	H4	AD	43	43	F	9.5	0.65	14.6	Tremolite			AS>5, 3:1, AFB>5, 3:1, PCMEF-US, PCMES-US, PCMEF-ISO, PCMES-ISO
G1	7	H4	AX	44	44	F	15	3.5	4.3	Tremolite			PCMEF-US, PCMES-US
G1	7	H4	AX	45	45	F	4.2	0.6	7	Tremolite			
G1	7	H4	AX	46		MD 1-0	6.5	4	1.6	Tremolite			AS>5, 3:1
G1	7	H4	AX		46	MF	5	0.65	7.7	Tremolite			
G1	7	H4	AX	47	47	F	15	2.75	5.5	Tremolite			AS>5, 3:1, AFB>5, 3:1, PCMEF-US, PCMES-US, PCMEF-ISO, PCMES-ISO
G1	7	H4	AX	48	48	F	2	0.55	3.6	Tremolite			
G1	7	H4	AX	49	49	F	5.7	1.2	4.7	Tremolite			PCMEF-US, PCMES-US, PCMEF-ISO, PCMES-ISO
G1	8	F4	AX	50	50	F	20	2.5	8	Tremolite			AS>5, 3:1, AFB>5, 3:1, PCMEF-US, PCMES-US, PCMEF-ISO, PCMES-ISO
G1	8	F4	AX	51	51	F	2.2	0.6	3.7	Tremolite			
G1	8	F4	AX	52	52	F	4	0.6	6.7	Tremolite			
G1	8	F4	AX	53	53	F	7.85	1	7.8	Tremolite			AS>5, 3:1, AFB>5, 3:1, PCMEF-US, PCMES-US, PCMEF-ISO, PCMES-ISO
G1	9	D4	AX	54	54	F	3.9	1.1	3.5	Tremolite			
G1	9	D4	AX	55	55	F	2.5	0.6	4.2	Tremolite			
G1	9	D4	AX	56	56	F	7.2	1.25	5.8	Tremolite			AS>5, 3:1, AFB>5, 3:1, PCMEF-US, PCMES-US, PCMEF-ISO, PCMES-ISO
G1	9	D4	AX	57	57	F	10.7	0.6	17.8	Tremolite			AS>5, 3:1, AFB>5, 3:1, PCMEF-US, PCMES-US, PCMEF-ISO, PCMES-ISO
G1	9	D4	AX	58	58	F	9	1.2	7.5	Tremolite			AS>5, 3:1, AFB>5, 3:1, PCMEF-US, PCMES-US, PCMEF-ISO, PCMES-ISO
G1	10	B4	AX	59	59	F	3.2	0.5	6.4	Tremolite			
G1	10	B4	AX	60	60	F	10.6	0.8	13.2	Tremolite			AS>5, 3:1, AFB>5, 3:1, PCMEF-US, PCMES-US, PCMEF-ISO, PCMES-ISO
G1	10	B4	AX	61	61	F	4.75	0.5	9.5	Tremolite			

Count Categories

AFB>5, 3:1	Asbestos Fibers and Bundles > 5um and 3:1	AS>5, 3:1	Asbestos Structures >5um and 3:1
PAS	Primary Asbestos Structures	PCMEF-ISO	PCM Equivalent Fibers-ISO
PCMEF-US	PCM Equivalent Fibers-NIOSH	PCMES-ISO	PCM Equivalent Structures-ISO
PCMES-US	PCM Equivalent Structures-NIOSH	TAS	Total Asbestos Structures

Lab/Cor, Inc.
7619 6th Ave Nw
Seattle, WA 98117

Final Report

Phone: (206) 781-0155
Fax: (206) 789-8424
http://www.labcor.net

A Professional Service Corporation in the Northwest

ISO 10312, Direct Raw Data

Job Number: 070434 **SEA**
Client: Idaho National Laboratory
Project Name: RARE

Report Number: 070434R06
Date Received: 4/23/2007

Client Sample No: **FB-2-R3** Lab/Cor Sample No: **S28**
Client Description: **Date Sampled: 4/16/2007**

Gr	No.	Loc.	ID	Prim	Tot	Class	Len	Wid	Asp	Analyte	Elements	Comment	Count Categories
G1	11	A7	AX	62	62	F	4.5	1.1	4.1	Tremolite			
G1	11	A7	AX	63	63	F	4.2	0.4	10.5	Tremolite			
G1	11	A7	AX	64	64	F	3.8	0.25	15.2	Tremolite			
G1	11	A7	AX	65	65	F	2	0.65	3.1	Tremolite			
G1	11	A7	AX	66	66	F	2.5	0.65	3.8	Tremolite			
G1	11	A7	AX	67	67	F	3	0.55	5.5	Tremolite			
G1	11	A7	AX	68	68	F	5	0.7	7.1	Tremolite			
G1	12	C7	AX	69		CD 2-1	14.3	1.5	9.5	Tremolite			AS>5, 3:1, PCMES-US, PCMES-ISO
G1	12	C7	AX		69	CF	14.3	0.6	23.8	Tremolite			AFB>5, 3:1, PCMEF-US, PCMEF-ISO
G1	12	C7	AX		70	CF	2.1	0.6	3.5	Tremolite			
G1	12	C7	AX	70		MD 1-1	6	2.8	2.1	Tremolite			AS>5, 3:1
G1	12	C7	AX		71	MF	6	0.85	7.1	Tremolite			AFB>5, 3:1, PCMEF-US, PCMEF-ISO
G1	12	C7	AX	71		MD 1-1	11	7	1.6	Tremolite			AS>5, 3:1
G1	12	C7	AX		72	MB	9.8	1.35	7.3	Tremolite			AFB>5, 3:1, PCMEF-US, PCMEF-ISO
G1	12	C7	AX	72	73	F	1.8	0.3	6	Tremolite			
G1	12	C7	AX	73	74	F	1.2	0.22	5.5	Tremolite			
G1	13	E7	AD	74		MD 1-0	3	2.5	1.2	Tremolite			
G1	13	E7	AD		75	MF	3	0.35	8.6	Tremolite			
G1	13	E7	AD	75	76	F	1.7	0.4	4.2	Tremolite			
G1	13	E7	AX	76	77	F	2.65	0.5	5.3	Tremolite			
G1	13	E7	AX	77	78	F	5.25	0.5	10.5	Tremolite			AS>5, 3:1, AFB>5, 3:1, PCMEF-US, PCMES-US, PCMEF-ISO, PCMES-ISO
G1	13	E7	AX	78	79	F	3.35	0.38	8.8	Tremolite			
G1	13	E7	AX	79	80	F	4	0.7	5.7	Tremolite			
G1	13	E7	AX	80	81	F	2	0.65	3.1	Tremolite			
G1	13	E7	AX	81	82	F	2.7	0.75	3.6	Tremolite			
G1	14	G7	AX	82	83	F	9.5	1.2	7.9	Tremolite			AS>5, 3:1, AFB>5, 3:1, PCMEF-US, PCMES-US, PCMEF-ISO, PCMES-ISO
G1	14	G7	AX	83	84	F	2.2	0.7	3.1	Tremolite			
G1	14	G7	AX	84	85	F	8	1.25	6.4	Tremolite			AS>5, 3:1, AFB>5, 3:1, PCMEF-US, PCMES-US, PCMEF-ISO, PCMES-ISO
G1	14	G7	AX	85	86	F	25	6.5	3.8	Tremolite			PCMES-US, PCMEF-US

Count Categories

AFB>5, 3:1	Asbestos Fibers and Bundles > 5um and 3:1	AS>5, 3:1	Asbestos Structures >5um and 3:1
PAS	Primary Asbestos Structures	PCMEF-ISO	PCM Equivalent Fibers-ISO
PCMEF-US	PCM Equivalent Fibers-NIOSH	PCMES-ISO	PCM Equivalent Structures-ISO
PCMES-US	PCM Equivalent Structures-NIOSH	TAS	Total Asbestos Structures

Lab/Cor, Inc.
7619 6th Ave Nw
Seattle, WA 98117

Final Report

Phone: (206) 781-0155
Fax: (206) 789-8424
http://www.labcor.net

A Professional Service Corporation in the Northwest

ISO 10312, Direct Raw Data

Job Number: 070434 **SEA**
Client: Idaho National Laboratory
Project Name: RARE

Report Number: 070434R06
Date Received: 4/23/2007

Client Sample No: **FB-2-R3** Lab/Cor Sample No: **S28**
Client Description: **Date Sampled: 4/16/2007**

Gr	No.	Loc.	ID	Prim	Tot	Class	Len	Wid	Asp	Analyte	Elements	Comment	Count Categories
G1	15	I7	AD	86	87	F	3.35	0.85	3.9	Tremolite			
G1	15	I7	AD	87	88	F	3.4	0.78	4.4	Tremolite			
G1	15	I7	AX	88	89	F	5.5	0.65	8.5	Tremolite			AS>5, 3:1, AFB>5, 3:1, PCMEF-US, PCMES-US, PCMEF-ISO, PCMES-ISO
G1	15	I7	AX	89	90	F	5.3	0.35	15.1	Tremolite			AS>5, 3:1, AFB>5, 3:1, PCMEF-US, PCMES-US, PCMEF-ISO, PCMES-ISO
G1	15	I7	AX	90	91	F	6.2	1.1	5.6	Tremolite			AFB>5, 3:1, AS>5, 3:1, PCMEF-US, PCMES-US, PCMEF-ISO, PCMES-ISO
G1	15	I7	AX	91	92	F	9.2	0.8	11.5	Tremolite			AS>5, 3:1, AFB>5, 3:1, PCMEF-US, PCMES-US, PCMEF-ISO, PCMES-ISO
G1	16	J9	AX	92		MD 1-0	2.25	0.8	2.8	Tremolite			
G1	16	J9	AX		93	MF	1.2	0.22	5.5	Tremolite			
G1	16	J9	AX	93	94	F	4.35	0.65	6.7	Tremolite			
G1	16	J9	AX	94	95	F	1.75	0.25	7	Tremolite			
G1	16	J9	AX	95	96	F	12.5	1.75	7.1	Tremolite			AS>5, 3:1, AFB>5, 3:1, PCMEF-US, PCMES-US, PCMEF-ISO, PCMES-ISO
G1	17	H9	AX	96	97	F	3.2	0.47	6.8	Tremolite			
G1	17	H9	AX	97	98	F	2.6	0.55	4.7	Tremolite			
G1	17	H9	AX	98	99	F	1.65	0.4	4.1	Tremolite			
G1	17	H9	AX	99	100	F	11	1.25	8.8	Tremolite			AS>5, 3:1, AFB>5, 3:1, PCMEF-US, PCMES-US, PCMEF-ISO, PCMES-ISO
G1	17	H9	AX	100	101	F	2.2	0.55	4	Tremolite			
G1	17	H9	AX	101	102	F	2.5	0.4	6.2	Tremolite			
G1	17	H9	AX	102		MD 1-1	11	10	1.1	Tremolite			AS>5, 3:1
G1	17	H9	AX		103	MF	6.5	1.2	5.4	Tremolite			AFB>5, 3:1, PCMEF-US, PCMEF-ISO
G1	17	H9	AX	103	104	F	2.65	0.85	3.1	Tremolite			
G1	17	H9	AX	104	105	F	1.25	0.18	6.9	Tremolite			
G1	17	H9	AX	105	106	F	3.85	0.33	11.7	Tremolite			
G1	17	H9	AX	106	107	B	2.5	0.75	3.3	Tremolite			
G1	18	F9	AX	107	108	F	55	2.2	25	Tremolite			AS>5, 3:1, AFB>5, 3:1, PCMEF-US, PCMES-US, PCMEF-ISO, PCMES-ISO
G1	18	F9	AX	108	109	F	3	0.55	5.5	Tremolite			
G1	19	D9	AX	109		MD 1-0	3.5	3	1.2	Tremolite			

Count Categories

AFB>5, 3:1	Asbestos Fibers and Bundles > 5um and 3:1	AS>5, 3:1	Asbestos Structures >5um and 3:1
PAS	Primary Asbestos Structures	PCMEF-ISO	PCM Equivalent Fibers-ISO
PCMEF-US	PCM Equivalent Fibers-NIOSH	PCMES-ISO	PCM Equivalent Structures-ISO
PCMES-US	PCM Equivalent Structures-NIOSH	TAS	Total Asbestos Structures

Lab/Cor, Inc.
7619 6th Ave Nw
Seattle, WA 98117

Final Report

Phone: (206) 781-0155
Fax: (206) 789-8424
http://www.labcor.net

A Professional Service Corporation in the Northwest

ISO 10312, Direct Raw Data

Job Number: 070434 **SEA**
Client: Idaho National Laboratory
Project Name: RARE

Report Number: 070434R06
Date Received: 4/23/2007

Client Sample No: **FB-2-R3** Lab/Cor Sample No: **S28**
Client Description: **Date Sampled: 4/16/2007**

Gr	No.	Loc.	ID	Prim	Tot	Class	Len	Wid	Asp	Analyte	Elements	Comment	Count Categories
G1	19	D9	AX		110	MF	3.5	0.4	8.8	Tremolite			
G1	19	D9	AX	110	111	F	1.85	0.38	4.9	Tremolite			
G1	19	D9	AX	111	112	F	2.5	0.6	4.2	Tremolite			
G1	20	B9	AX	112		MD 1-0	11	9	1.2	Tremolite			AS>5, 3:1
G1	20	B9	AX		113	MF	2.99	0.3	10	Tremolite			
G1	20	B9	AX	113	114	F	3.2	0.9	3.6	Tremolite			
G1	20	B9	AX	114	115	F	2.9	0.3	9.7	Tremolite			
G1	20	B9	AX	115	116	F	2.6	0.4	6.5	Tremolite			
G1	20	B9	AX	116	117	F	2.7	0.8	3.4	Tremolite			
G2	21	A2	AX	117		MD 1-0	9	3	3	Tremolite			AS>5, 3:1, PCMES-US, PCMES-ISO
G2	21	A2	AX		118	MB	3.5	1	3.5	Tremolite			
G2	21	A2	AX	118	119	F	1.85	0.25	7.4	Tremolite			
G2	21	A2	AX	119	120	F	10	0.6	16.7	Tremolite			AS>5, 3:1, AFB>5, 3:1, PCMEF-US, PCMES-US, PCMEF-ISO, PCMES-ISO
G2	21	A2	AX	120	121	B	4.25	1.25	3.4	Tremolite			
G2	21	A2	AX	121	122	F	2.7	0.4	6.8	Tremolite			
G2	21	A2	AX	122	123	F	1.75	0.35	5	Tremolite			
G2	22	C2	AX	123	124	F	4.1	0.8	5.1	Tremolite			
G2	22	C2	AX	124	125	F	9	1	9	Tremolite			AS>5, 3:1, AFB>5, 3:1, PCMEF-US, PCMES-US, PCMEF-ISO, PCMES-ISO
G2	22	C2	AX	125	126	F	5.4	0.6	9	Tremolite			AS>5, 3:1, AFB>5, 3:1, PCMEF-US, PCMES-US, PCMEF-ISO, PCMES-ISO
G2	22	C2	AX	126	127	F	2.6	0.2	13	Tremolite			
G2	22	C2	AX	127	128	F	4.75	1.5	3.2	Tremolite			
G2	22	C2	AX	128	129	F	7.7	0.45	17.1	Tremolite			AS>5, 3:1, AFB>5, 3:1, PCMEF-US, PCMES-US, PCMEF-ISO, PCMES-ISO
G2	22	C2	AX	129	130	F	15	2.5	6	Tremolite			AS>5, 3:1, AFB>5, 3:1, PCMEF-US, PCMES-US, PCMEF-ISO, PCMES-ISO
G2	22	C2	AX	130	131	F	2.75	0.6	4.6	Tremolite			
G2	22	C2	AX	131	132	F	5.12	0.45	11.4	Tremolite			AS>5, 3:1, AFB>5, 3:1, PCMEF-US, PCMES-US, PCMEF-ISO, PCMES-ISO
G2	22	C2	AX	132	133	F	4.2	0.6	7	Tremolite			
G2	22	C2	AX	133	134	F	12	2.5	4.8	Tremolite			PCMEF-US, PCMES-US, PCMEF-ISO, PCMES-ISO

Count Categories

AFB>5, 3:1	Asbestos Fibers and Bundles > 5um and 3:1	AS>5, 3:1	Asbestos Structures >5um and 3:1
PAS	Primary Asbestos Structures	PCMEF-ISO	PCM Equivalent Fibers-ISO
PCMEF-US	PCM Equivalent Fibers-NIOSH	PCMES-ISO	PCM Equivalent Structures-ISO
PCMES-US	PCM Equivalent Structures-NIOSH	TAS	Total Asbestos Structures

Lab/Cor, Inc.
7619 6th Ave Nw
Seattle, WA 98117

Final Report

Phone: (206) 781-0155
Fax: (206) 789-8424
http://www.labcor.net

A Professional Service Corporation in the Northwest

ISO 10312, Direct Raw Data

Job Number: 070434 **SEA**
Client: Idaho National Laboratory
Project Name: RARE

Report Number: 070434R06
Date Received: 4/23/2007

Client Sample No: **FB-2-R3** Lab/Cor Sample No: **S28**
Client Description: **Date Sampled: 4/16/2007**

Gr	No.	Loc.	ID	Prim	Tot	Class	Len	Wid	Asp	Analyte	Elements	Comment	Count Categories
G2	22	C2	AX	134	135	F	1.75	0.35	5	Tremolite			
G2	23	E2	AX	135		MD 1-0	3	1.2	2.5	Tremolite			
G2	23	E2	AX		136	MF	1.25	0.35	3.6	Tremolite			
G2	23	E2	AX	136		MD 1-0	4	3.8	1.1	Tremolite			
G2	23	E2	AX		137	MF	3.1	0.4	7.7	Tremolite			
G2	23	E2	AX	137	138	F	5.25	1.35	3.9	Tremolite			PCMEF-US, PCMES-US, PCMEF-ISO, PCMES-ISO
G2	23	E2	AX	138		MD 1-1	20	12	1.7	Tremolite			AS>5, 3:1
G2	23	E2	AX		139	MF	6	0.3	20	Tremolite			AFB>5, 3:1, PCMEF-US, PCMEF-ISO
G2	23	E2	AX	139	140	F	2.9	0.55	5.3	Tremolite			
G2	23	E2	AX	140	141	F	3	0.33	9.1	Tremolite			
G2	23	E2	AX	141	142	F	3	0.56	5.4	Tremolite			
G2	23	E2	AX	142	143	F	15	1.8	8.3	Tremolite			AS>5, 3:1, AFB>5, 3:1, PCMEF-US, PCMES-US, PCMEF-ISO, PCMES-ISO
G2	24	G2	AX	143		MD 1-0	6.5	5.8	1.1	Tremolite			AS>5, 3:1
G2	24	G2	AX		144	MF	3.8	0.7	5.4	Tremolite			
G2	24	G2	AX	144	145	F	11.85	0.885	13.4	Tremolite			AS>5, 3:1, AFB>5, 3:1, PCMEF-US, PCMES-US, PCMEF-ISO, PCMES-ISO
G2	24	G2	AX	145	146	F	16.8	0.38	44.2	Tremolite			AS>5, 3:1, AFB>5, 3:1, PCMEF-US, PCMES-US, PCMEF-ISO, PCMES-ISO
G2	25	I2	AX	146	147	F	5	0.7	7.1	Tremolite			
G2	25	I2	AX	147	148	F	1	0.25	4	Tremolite			
G2	25	I2	AX	148	149	F	9.5	1.2	7.9	Tremolite			AS>5, 3:1, AFB>5, 3:1, PCMEF-US, PCMES-US, PCMEF-ISO, PCMES-ISO
G2	25	I2	AX	149	150	F	2.65	0.5	5.3	Tremolite			
G2	25	I2	AX	150	151	F	7.2	0.85	8.5	Tremolite			AS>5, 3:1, AFB>5, 3:1, PCMEF-US, PCMES-US, PCMEF-ISO, PCMES-ISO
G2	25	I2	AX	151	152	F	10	1.7	5.9	Tremolite			AS>5, 3:1, AFB>5, 3:1, PCMEF-US, PCMES-US, PCMES-ISO, PCMEF-ISO
G2	25	I2	AX	152	153	F	1.7	0.4	4.2	Tremolite			
G2	25	I2	AX	153	154	F	3.2	0.55	5.8	Tremolite			
G2	25	I2	AX	154	155	F	9	3	3	Tremolite			PCMEF-US, PCMES-US, PCMEF-ISO, PCMES-ISO
G2	25	I2	AX	155	156	F	1.25	0.2	6.2	Tremolite			

Count Categories

AFB>5, 3:1	Asbestos Fibers and Bundles > 5um and 3:1	AS>5, 3:1	Asbestos Structures >5um and 3:1
PAS	Primary Asbestos Structures	PCMEF-ISO	PCM Equivalent Fibers-ISO
PCMEF-US	PCM Equivalent Fibers-NIOSH	PCMES-ISO	PCM Equivalent Structures-ISO
PCMES-US	PCM Equivalent Structures-NIOSH	TAS	Total Asbestos Structures

Lab/Cor, Inc.
7619 6th Ave Nw
Seattle, WA 98117

Final Report

Phone: (206) 781-0155
Fax: (206) 789-8424
http://www.labcor.net

A Professional Service Corporation in the Northwest

ISO 10312, Direct Raw Data

Job Number: 070434 **SEA**
Client: Idaho National Laboratory
Project Name: RARE

Report Number: 070434R06
Date Received: 4/23/2007

Client Sample No: **FB-2-R3** Lab/Cor Sample No: **S28**
Client Description: **Date Sampled: 4/16/2007**

Gr	No.	Loc.	ID	Prim	Tot	Class	Len	Wid	Asp	Analyte	Elements	Comment	Count Categories
G2	25	I2	AX	156	157	F	5.25	0.75	7	Tremolite			AS>5, 3:1, AFB>5, 3:1, PCMEF-US, PCMES-US, PCMEF-ISO, PCMES-ISO
G2	25	I2	AX	157	158	F	4	0.5	8	Tremolite			
G2	26	J4	AX	158	159	F	5.7	1.2	4.7	Tremolite			PCMEF-US, PCMES-US, PCMEF-ISO, PCMES-ISO
G2	26	J4	AX	159	160	F	9	0.3	30	Tremolite			AS>5, 3:1, AFB>5, 3:1, PCMEF-US, PCMES-US, PCMEF-ISO, PCMES-ISO
G2	26	J4	AX	160	161	F	6.2	1.12	5.5	Tremolite			AS>5, 3:1, AFB>5, 3:1, PCMEF-US, PCMES-US, PCMEF-ISO, PCMES-ISO
G2	26	J4	AX	161	162	F	4	0.65	6.2	Tremolite			
G2	26	J4	AX	162		MD 1-0	1.8	0.6	3	Tremolite			
G2	26	J4	AX		163	MF	1.55	0.2	7.7	Tremolite			
G2	27	H4	AX	163	164	F	8	1.2	6.7	Tremolite			AS>5, 3:1, AFB>5, 3:1, PCMEF-US, PCMES-US, PCMEF-ISO, PCMES-ISO
G2	27	H4	AX	164		MD 1-0	7	2.8	2.5	Tremolite			AS>5, 3:1
G2	27	H4	AX		165	MF	3.5	0.5	7	Tremolite			
G2	27	H4	AX	165	166	F	2.2	0.7	3.1	Tremolite			
G2	27	H4	AX	166	167	F	3.12	0.65	4.8	Tremolite			
G2	27	H4	AX	167	168	F	7.5	0.55	13.6	Tremolite			AFB>5, 3:1, AS>5, 3:1, PCMEF-US, PCMES-US, PCMEF-ISO, PCMES-ISO
G2	27	H4	AX	168	169	F	1.65	0.38	4.3	Tremolite			
G2	28	F4	AX	169	170	F	20	0.85	23.5	Tremolite			AS>5, 3:1, AFB>5, 3:1, PCMEF-US, PCMES-US, PCMEF-ISO, PCMES-ISO
G2	28	F4	AX	170	171	F	5.5	0.8	6.9	Tremolite			AS>5, 3:1, AFB>5, 3:1, PCMEF-US, PCMES-US, PCMEF-ISO, PCMES-ISO
G2	28	F4	AX	171	172	F	4.8	0.5	9.6	Tremolite			
G2	28	F4	AX	172	173	F	7	1.5	4.7	Tremolite			PCMEF-US, PCMES-US, PCMEF-ISO, PCMES-ISO
G2	28	F4	AX	173	174	F	1.25	0.35	3.6	Tremolite			
G2	29	D4	AX	174	175	F	9.3	2.35	4	Tremolite			PCMEF-US, PCMES-US, PCMEF-ISO, PCMES-ISO
G2	29	D4	AX	175	176	F	12.2	1.2	10.2	Tremolite			AS>5, 3:1, AFB>5, 3:1, PCMEF-US, PCMES-US, PCMEF-ISO, PCMES-ISO
G2	29	D4	AX	176	177	F	1.25	0.2	6.2	Tremolite			

Count Categories

AFB>5, 3:1	Asbestos Fibers and Bundles > 5um and 3:1	AS>5, 3:1	Asbestos Structures >5um and 3:1
PAS	Primary Asbestos Structures	PCMEF-ISO	PCM Equivalent Fibers-ISO
PCMEF-US	PCM Equivalent Fibers-NIOSH	PCMES-ISO	PCM Equivalent Structures-ISO
PCMES-US	PCM Equivalent Structures-NIOSH	TAS	Total Asbestos Structures

Lab/Cor, Inc.
7619 6th Ave Nw
Seattle, WA 98117

Final Report

Phone: (206) 781-0155
Fax: (206) 789-8424
http://www.labcor.net

A Professional Service Corporation in the Northwest

ISO 10312, Direct Raw Data

Job Number: 070434 **SEA**
Client: Idaho National Laboratory
Project Name: RARE

Report Number: 070434R06
Date Received: 4/23/2007

Client Sample No: **FB-2-R3** Lab/Cor Sample No: **S28**
Client Description: **Date Sampled: 4/16/2007**

Gr	No.	Loc.	ID	Prim	Tot	Class	Len	Wid	Asp	Analyte	Elements	Comment	Count Categories
G2	29	D4	AX	177	178	F	8	1.2	6.7	Tremolite			AS>5, 3:1, AFB>5, 3:1, PCMEF-US, PCMES-US, PCMEF-ISO, PCMES-ISO
G2	29	D4	AX	178	179	F	3.9	1.2	3.2	Tremolite			
G2	29	D4	AX	179	180	F	1.35	0.4	3.4	Tremolite			
G2	30	B4	AX	180	181	F	10.65	1.5	7.1	Tremolite			AS>5, 3:1, AFB>5, 3:1, PCMEF-US, PCMES-US, PCMEF-ISO, PCMES-ISO
G2	30	B4	AX	181	182	F	2.7	0.35	7.7	Tremolite			
G2	30	B4	AX	182	183	F	5.2	1.75	3	Tremolite			
G2	31	A7	AX	183	184	F	7.15	1.1	6.5	Tremolite			AS>5, 3:1, AFB>5, 3:1, PCMEF-US, PCMES-US, PCMEF-ISO, PCMES-ISO
G2	31	A7	AX	184	185	F	3.8	0.5	7.6	Tremolite			
G2	31	A7	AX	185	186	F	3.5	0.6	5.8	Tremolite			
G2	31	A7	AX	186	187	F	19	1.5	12.7	Tremolite			AS>5, 3:1, AFB>5, 3:1, PCMEF-US, PCMES-US, PCMEF-ISO, PCMES-ISO
G2	31	A7	AX	187	188	F	10	1.8	5.6	Tremolite			AS>5, 3:1, AFB>5, 3:1, PCMEF-US, PCMES-US, PCMEF-ISO, PCMES-ISO
G2	31	A7	AX	188	189	F	10.1	1.25	8.1	Tremolite			AS>5, 3:1, AFB>5, 3:1, PCMEF-US, PCMES-US, PCMEF-ISO, PCMES-ISO
G2	31	A7	AX	189	190	F	30	3	10	Tremolite			AS>5, 3:1, AFB>5, 3:1, PCMEF-US, PCMES-US, PCMEF-ISO, PCMES-ISO
G2	32	C7	AX	190	191	F	4.85	0.55	8.8	Tremolite			
G2	32	C7	AX	191	192	F	4.35	0.85	5.1	Tremolite			
G2	33	E7	AX	192	193	F	3	0.4	7.5	Tremolite			
G2	33	E7	AX	193	194	F	3	0.5	6	Tremolite			
G2	33	E7	AX	194	195	F	9.2	0.6	15.3	Tremolite			AS>5, 3:1, AFB>5, 3:1, PCMEF-US, PCMES-US, PCMEF-ISO, PCMES-ISO
G2	33	E7	AX	195	196	F	14	1.2	11.7	Tremolite			AS>5, 3:1, AFB>5, 3:1, PCMEF-US, PCMES-US, PCMEF-ISO, PCMES-ISO
G2	33	E7	AX	196	197	F	12	4	3	Tremolite			PCMEF-US, PCMES-US
G2	33	E7	AX	197		MD 1-1	6.8	5.5	1.2	Tremolite			AS>5, 3:1
G2	33	E7	AX		198	MF	5.1	0.27	18.9	Tremolite			AFB>5, 3:1, PCMEF-US, PCMEF-ISO
G2	33	E7	AX	198	199	F	7	0.8	8.8	Tremolite			AS>5, 3:1, AFB>5, 3:1, PCMEF-US, PCMES-US, PCMEF-ISO, PCMES-ISO

Count Categories

AFB>5, 3:1	Asbestos Fibers and Bundles > 5um and 3:1	AS>5, 3:1	Asbestos Structures >5um and 3:1
PAS	Primary Asbestos Structures	PCMEF-ISO	PCM Equivalent Fibers-ISO
PCMEF-US	PCM Equivalent Fibers-NIOSH	PCMES-ISO	PCM Equivalent Structures-ISO
PCMES-US	PCM Equivalent Structures-NIOSH	TAS	Total Asbestos Structures

Lab/Cor, Inc.
7619 6th Ave Nw
Seattle, WA 98117

Final Report

Phone: (206) 781-0155
Fax: (206) 789-8424
http://www.labcor.net

A Professional Service Corporation in the Northwest

ISO 10312, Direct Raw Data

Job Number: 070434 **SEA**
Client: Idaho National Laboratory
Project Name: RARE

Report Number: 070434R06
Date Received: 4/23/2007

Client Sample No: **FB-2-R3** Lab/Cor Sample No: **S28**
Client Description: **Date Sampled: 4/16/2007**

Gr	No.	Loc.	ID	Prim	Tot	Class	Len	Wid	Asp	Analyte	Elements	Comment	Count Categories
G2	34	G7	AX	199	200	F	7.8	1.8	4.3	Tremolite			PCMEF-US, PCMES-US, PCMEF-ISO, PCMES-ISO
G2	34	G7	AX	200	201	F	7.8	0.38	20.5	Tremolite			AS>5, 3:1, AFB>5, 3:1, PCMEF-US, PCMES-US, PCMEF-ISO, PCMES-ISO
G2	34	G7	AX	201		MD 1-0	11	7	1.6	Tremolite			AS>5, 3:1
G2	34	G7	AX		202	MF	4.5	0.35	12.9	Tremolite			
G2	34	G7	AX	202	203	F	5.12	1.7	3	Tremolite			PCMEF-US, PCMES-US, PCMEF-ISO, PCMES-ISO
G2	35	I7	AX	203	204	F	2.6	0.65	4	Tremolite			
G2	35	I7	AX	204	205	F	4.25	1.2	3.5	Tremolite			
G2	35	I7	AX	205	206	F	11.2	0.4	28	Tremolite			AS>5, 3:1, AFB>5, 3:1, PCMEF-US, PCMES-US, PCMEF-ISO, PCMES-ISO
G2	35	I7	AX	206	207	F	3.8	0.7	5.4	Tremolite			
G2	35	I7	AX	207	208	F	3	0.65	4.6	Tremolite			
G2	35	I7	AX	208	209	F	4	0.65	6.2	Tremolite			
G2	35	I7	AX	209		MD 1-1	10	9	1.1	Tremolite			AS>5, 3:1
G2	35	I7	AX		210	MF	9	0.6	15	Tremolite			AFB>5, 3:1, PCMEF-US, PCMEF-ISO

Count Categories

AFB>5, 3:1	Asbestos Fibers and Bundles > 5um and 3:1	AS>5, 3:1	Asbestos Structures >5um and 3:1
PAS	Primary Asbestos Structures	PCMEF-ISO	PCM Equivalent Fibers-ISO
PCMEF-US	PCM Equivalent Fibers-NIOSH	PCMES-ISO	PCM Equivalent Structures-ISO
PCMES-US	PCM Equivalent Structures-NIOSH	TAS	Total Asbestos Structures

Lab/Cor, Inc.
7619 6th Ave Nw
Seattle, WA 98117

Final Report

Phone: (206) 781-0155
Fax: (206) 789-8424
http://www.labcor.net

A Professional Service Corporation in the Northwest

ISO 10312, Direct Raw Data

Job Number: 070434 **SEA**
Client: Idaho National Laboratory
Project Name: RARE

Report Number: 070434R06
Date Received: 4/23/2007

Client Sample No: **FB-2-R4** Lab/Cor Sample No: **S29**
Client Description: **Date Sampled: 4/16/2007**

Gr	No.	Loc.	ID	Prim	Tot	Class	Len	Wid	Asp	Analyte	Elements	Comment	Count Categories
G1	1	A2	AX	1	1	F	1.7	0.4	4.2	Tremolite			
G1	1	A2	AQ	2	2	F	17.5	2	8.8	Tremolite	Mg, Al, Si, Ca, Fe		AS>5, 3:1, AFB>5, 3:1, PCMEF-US, PCMES-US, PCMEF-ISO, PCMES-ISO
						ItemType	ItemNum				Confirmed	Comment	
						Spectra	J3011						
G1	2	C2	AX	3		MD 1-1	7.58	6	1.3	Tremolite			AS>5, 3:1
G1	2	C2	AX		3	MF	5.75	1.2	4.8	Tremolite			PCMEF-US, PCMEF-ISO
G1	2	C2	AX	4	4	F	5.35	0.65	8.2	Tremolite			AS>5, 3:1, AFB>5, 3:1, PCMEF-US, PCMES-US, PCMEF-ISO, PCMES-ISO
G1	2	C2	AX	5	5	F	3	0.3	10	Tremolite			
G1	2	C2	AX	6	6	F	4	0.75	5.3	Tremolite			
G1	2	C2	AX	7		MD 2-2	13.8	2.75	5	Tremolite			AS>5, 3:1, PCMES-US, PCMES-ISO
G1	2	C2	AX		7	MF	13.2	0.5	26.4	Tremolite			AFB>5, 3:1, PCMEF-US, PCMEF-ISO
G1	2	C2	AX		8	MF	5.1	0.25	20.4	Tremolite			AFB>5, 3:1, PCMEF-US, PCMEF-ISO
G1	2	C2	AX	8	9	F	4.5	0.65	6.9	Tremolite			
G1	2	C2	AX	9	10	F	22.5	1.5	15	Tremolite			AS>5, 3:1, AFB>5, 3:1, PCMEF-US, PCMES-US, PCMEF-ISO, PCMES-ISO
G1	2	C2	AX	10	11	F	10.85	0.8	13.6	Tremolite			AS>5, 3:1, AFB>5, 3:1, PCMEF-US, PCMES-US, PCMEF-ISO, PCMES-ISO
G1	2	C2	AX	11		MD 1-0	6	1.85	3.2	Tremolite			AS>5, 3:1, PCMES-US, PCMES-ISO
G1	2	C2	AX		12	MF	4.8	0.55	8.7	Tremolite			
G1	2	C2	AX	12	13	F	5.4	0.6	9	Tremolite			AFB>5, 3:1, AS>5, 3:1, PCMEF-US, PCMES-US, PCMEF-ISO, PCMES-ISO
G1	2	C2	ADQ	13	14	F	9.8	1.2	8.2	Tremolite	Mg, Al, Si, Ca, Fe		AS>5, 3:1, AFB>5, 3:1, PCMEF-US, PCMES-US, PCMEF-ISO, PCMES-ISO
						ItemType	ItemNum				Confirmed	Comment	
						Spectra	J3012						
G1	2	C2	AX	14	15	F	4.35	1.2	3.6	Tremolite			
G1	2	C2	AX	15	16	F	7	0.2	35	Tremolite			AS>5, 3:1, AFB>5, 3:1, PCMEF-ISO, PCMES-ISO

Count Categories

AFB>5, 3:1	Asbestos Fibers and Bundles > 5um and 3:1	AS>5, 3:1	Asbestos Structures >5um and 3:1
PAS	Primary Asbestos Structures	PCMEF-ISO	PCM Equivalent Fibers-ISO
PCMEF-US	PCM Equivalent Fibers-NIOSH	PCMES-ISO	PCM Equivalent Structures-ISO
PCMES-US	PCM Equivalent Structures-NIOSH	TAS	Total Asbestos Structures

Lab/Cor, Inc.
7619 6th Ave Nw
Seattle, WA 98117

Final Report

Phone: (206) 781-0155
Fax: (206) 789-8424
http://www.labcor.net

A Professional Service Corporation in the Northwest

ISO 10312, Direct Raw Data

Job Number: 070434 **SEA**
Client: Idaho National Laboratory
Project Name: RARE

Report Number: 070434R06
Date Received: 4/23/2007

Client Sample No: **FB-2-R4** Lab/Cor Sample No: **S29**
Client Description: **Date Sampled: 4/16/2007**

Gr	No.	Loc.	ID	Prim	Tot	Class	Len	Wid	Asp	Analyte	Elements	Comment	Count Categories
G1	3	E2	AZQ	16	17	F	4.45	0.53	8.4	Tremolite	Mg, Al, Si, Ca, Fe		

ItemType	ItemNum	Confirmed	Comment
Brightfield	J3572 BF		
Diffraction	J3572	KM 6/4/2007	ZONE AXIS [1 0 0]
Spectra	J3013		

Gr	No.	Loc.	ID	Prim	Tot	Class	Len	Wid	Asp	Analyte	Elements	Comment	Count Categories
G1	3	E2	AX	17	18	F	6.5	1.5	4.3	Tremolite			PCMEF-US, PCMES-US, PCMEF-ISO, PCMES-ISO
G1	3	E2	AX	18	19	F	5.85	1	5.8	Tremolite			AS>5, 3:1, AFB>5, 3:1, PCMEF-US, PCMES-US, PCMEF-ISO, PCMES-ISO
G1	3	E2	AX	19	20	B	4.5	0.75	6	Tremolite			
G1	3	E2	AX	20	21	F	4	0.65	6.2	Tremolite			
G1	4	G2	AX	21	22	F	4.8	0.4	12	Tremolite			
G1	4	G2	AX	22	23	F	3.25	0.65	5	Tremolite			
G1	4	G2	AX	23	24	F	4.2	1	4.2	Tremolite			
G1	4	G2	AX	24	25	F	3	0.85	3.5	Tremolite			
G1	5	I2	AX	25	26	F	2.2	0.18	12.2	Tremolite			
G1	5	I2	AX	26	27	F	3.25	0.38	8.6	Tremolite			
G1	5	I2	AX	27	28	F	1.2	0.15	8	Tremolite			
G1	5	I2	AX	28	29	F	1.1	0.22	5	Tremolite			
G1	5	I2	AX	29	30	F	1.5	0.2	7.5	Tremolite			
G1	5	I2	AX	30	31	F	19	2	9.5	Tremolite			AS>5, 3:1, AFB>5, 3:1, PCMEF-US, PCMES-US, PCMEF-ISO, PCMES-ISO
G1	5	I2	AX	31	32	F	4	0.4	10	Tremolite			
G1	5	I2	AX	32	33	F	15.25	1	15.2	Tremolite			AS>5, 3:1, AFB>5, 3:1, PCMEF-US, PCMES-US, PCMEF-ISO, PCMES-ISO
G1	5	I2	AX	33	34	F	6	0.7	8.6	Tremolite			AS>5, 3:1, AFB>5, 3:1, PCMEF-US, PCMES-US, PCMEF-ISO, PCMES-ISO
G1	6	J4	AX	34	35	F	1.25	0.38	3.3	Tremolite			
G1	6	J4	AX	35	36	F	3.25	0.5	6.5	Tremolite			
G1	6	J4	AX	36	37	F	1.65	0.35	4.7	Tremolite			
G1	6	J4	AX	37	38	F	5.7	0.8	7.1	Tremolite			AS>5, 3:1, AFB>5, 3:1, PCMEF-US, PCMES-US, PCMEF-ISO, PCMES-ISO
G1	6	J4	AX	38	39	F	4.5	0.8	5.6	Tremolite			
G1	6	J4	AX	39	40	F	1.75	0.55	3.2	Tremolite			

Count Categories

AFB>5, 3:1	Asbestos Fibers and Bundles > 5um and 3:1	AS>5, 3:1	Asbestos Structures >5um and 3:1
PAS	Primary Asbestos Structures	PCMEF-ISO	PCM Equivalent Fibers-ISO
PCMEF-US	PCM Equivalent Fibers-NIOSH	PCMES-ISO	PCM Equivalent Structures-ISO
PCMES-US	PCM Equivalent Structures-NIOSH	TAS	Total Asbestos Structures

Lab/Cor, Inc.
7619 6th Ave Nw
Seattle, WA 98117

Final Report

Phone: (206) 781-0155
Fax: (206) 789-8424
http://www.labcor.net

A Professional Service Corporation in the Northwest

ISO 10312, Direct Raw Data

Job Number: 070434 **SEA**
Client: Idaho National Laboratory
Project Name: RARE

Report Number: 070434R06
Date Received: 4/23/2007

Client Sample No: **FB-2-R4** Lab/Cor Sample No: **S29**
Client Description: **Date Sampled: 4/16/2007**

Gr	No.	Loc.	ID	Prim	Tot	Class	Len	Wid	Asp	Analyte	Elements	Comment	Count Categories
G1	7	H4	AX	40	41	F	7	0.55	12.7	Tremolite			AS>5, 3:1, AFB>5, 3:1, PCMEF-US, PCMES-US, PCMEF-ISO, PCMES-ISO
G1	7	H4	AX	41	42	F	54	1.2	45	Tremolite			AS>5, 3:1, AFB>5, 3:1, PCMEF-US, PCMES-US, PCMEF-ISO, PCMES-ISO
G1	7	H4	AX	42	43	F	7.5	1.35	5.6	Tremolite			AS>5, 3:1, AFB>5, 3:1, PCMEF-US, PCMES-US, PCMEF-ISO, PCMES-ISO
G1	7	H4	AX	43	44	F	6.1	1.2	5.1	Tremolite			AS>5, 3:1, AFB>5, 3:1, PCMEF-US, PCMES-US, PCMEF-ISO, PCMES-ISO
G1	7	H4	AX	44	45	F	3.75	0.8	4.7	Tremolite			
G1	7	H4	AX	45	46	F	1.7	0.38	4.5	Tremolite			
G1	7	H4	AX	46	47	F	6	1.25	4.8	Tremolite			PCMEF-US, PCMES-US, PCMEF-ISO, PCMES-ISO
G1	7	H4	AX	47	48	F	1.8	0.68	2.6	Tremolite			
G1	7	H4	AX	48	49	F	1.75	0.65	2.7	Tremolite			
G1	8	F4	AX	49	50	F	4.85	1.5	3.2	Tremolite			
G1	8	F4	AX	50	51	F	6.75	2	3.4	Tremolite			PCMEF-US, PCMES-US, PCMEF-ISO, PCMES-ISO
G1	8	F4	AX	51	52	F	21.7	1.8	12.1	Tremolite			AS>5, 3:1, AFB>5, 3:1, PCMEF-US, PCMES-US, PCMEF-ISO, PCMES-ISO
G1	8	F4	AX	52		CD 2-2	35	12.2	2.9	Tremolite			AS>5, 3:1
G1	8	F4	AX		53	CF	27.5	3.75	7.3	Tremolite			AFB>5, 3:1, PCMEF-US
G1	8	F4	AX		54	CF	9	0.75	12	Tremolite			AFB>5, 3:1, PCMEF-US, PCMEF-ISO
G1	8	F4	AX		55	CF	5.5	0.55	10	Tremolite			AFB>5, 3:1, PCMEF-US, PCMEF-ISO
G1	8	F4	AX		56	CB	4.5	0.8	5.6	Tremolite			
G1	8	F4	AX	53	57	F	7.75	0.65	11.9	Tremolite			AS>5, 3:1, AFB>5, 3:1, PCMEF-US, PCMES-US, PCMEF-ISO, PCMES-ISO
G1	8	F4	AX	54	58	F	13.5	1.8	7.5	Tremolite			AS>5, 3:1, AFB>5, 3:1, PCMEF-US, PCMES-US, PCMEF-ISO, PCMES-ISO
G1	8	F4	AX	55	59	F	6.2	1.2	5.2	Tremolite			AS>5, 3:1, AFB>5, 3:1, PCMEF-US, PCMES-US, PCMEF-ISO, PCMES-ISO
G1	8	F4	AX	56	60	F	5.6	0.7	8	Tremolite			AS>5, 3:1, AFB>5, 3:1, PCMEF-US, PCMES-US, PCMEF-ISO, PCMES-ISO
G1	8	F4	AX	57	61	F	29	4.5	6.4	Tremolite			AS>5, 3:1, AFB>5, 3:1, PCMEF-US, PCMES-US

Count Categories

AFB>5, 3:1	Asbestos Fibers and Bundles > 5um and 3:1	AS>5, 3:1	Asbestos Structures >5um and 3:1
PAS	Primary Asbestos Structures	PCMEF-ISO	PCM Equivalent Fibers-ISO
PCMEF-US	PCM Equivalent Fibers-NIOSH	PCMES-ISO	PCM Equivalent Structures-ISO
PCMES-US	PCM Equivalent Structures-NIOSH	TAS	Total Asbestos Structures

Lab/Cor, Inc.
7619 6th Ave Nw
Seattle, WA 98117

Final Report

Phone: (206) 781-0155
Fax: (206) 789-8424
http://www.labcor.net

A Professional Service Corporation in the Northwest

ISO 10312, Direct Raw Data

Job Number: 070434 **SEA**
Client: Idaho National Laboratory
Project Name: RARE

Report Number: 070434R06
Date Received: 4/23/2007

Client Sample No: **FB-2-R4** Lab/Cor Sample No: **S29**
Client Description: **Date Sampled: 4/16/2007**

Gr	No.	Loc.	ID	Prim	Tot	Class	Len	Wid	Asp	Analyte	Elements	Comment	Count Categories
G1	9	D4	AX	58	62	F	2.7	0.22	12.3	Tremolite			
G1	9	D4	AX	59	63	F	7.65	1.1	7	Tremolite			AS>5, 3:1, AFB>5, 3:1, PCMEF-US, PCMES-US, PCMEF-ISO, PCMES-ISO
G1	9	D4	AX	60	64	F	13.2	2.7	4.9	Tremolite			PCMEF-US, PCMES-US, PCMEF-ISO, PCMES-ISO
G1	9	D4	AX	61	65	F	4.9	0.75	6.5	Tremolite			
G1	9	D4	AX	62		MD 1-1	10	4.5	2.2	Tremolite			AS>5, 3:1
G1	9	D4	AX		66	MF	6	0.8	7.5	Tremolite			AFB>5, 3:1, PCMEF-US, PCMEF-ISO
G1	10	B4	AX	63	67	F	2	0.35	5.7	Tremolite			
G1	10	B4	AX	64	68	F	15	0.7	21.4	Tremolite			AS>5, 3:1, AFB>5, 3:1, PCMEF-US, PCMES-US, PCMEF-ISO, PCMES-ISO
G1	10	B4	AX	65	69	F	3.75	0.65	5.8	Tremolite			
G1	10	B4	AX	66	70	F	2.75	0.35	7.9	Tremolite			
G1	10	B4	AX	67	71	F	4.2	0.5	8.4	Tremolite			
G1	10	B4	AX	68	72	F	40	4.75	8.4	Tremolite			AS>5, 3:1, AFB>5, 3:1, PCMEF-US, PCMES-US
G1	11	A7	AX	69		MD 1-1	22	10	2.2	Tremolite			AS>5, 3:1
G1	11	A7	AX		73	MF	21.5	0.5	43	Tremolite			AFB>5, 3:1, PCMEF-US, PCMEF-ISO
G1	11	A7	AX	70		CD 2-1	13	5	2.6	Tremolite			AS>5, 3:1
G1	11	A7	AX		74	CF	13	4	3.2	Tremolite			PCMEF-US
G1	11	A7	AX		75	CF	4	0.8	5	Tremolite			
G1	11	A7	AX	71		MD 1-1	11.2	3.5	3.2	Tremolite			AS>5, 3:1, PCMES-US
G1	11	A7	AX		76	MF	9.7	0.5	19.4	Tremolite			AFB>5, 3:1, PCMEF-US, PCMEF-ISO
G1	11	A7	AX	72	77	F	7	0.55	12.7	Tremolite			AS>5, 3:1, AFB>5, 3:1, PCMEF-US, PCMES-US, PCMEF-ISO, PCMES-ISO
G1	11	A7	AX	73	78	F	3	0.8	3.8	Tremolite			
G1	12	C7	AX	74	79	F	12	1.2	10	Tremolite			AS>5, 3:1, AFB>5, 3:1, PCMEF-US, PCMES-US, PCMEF-ISO, PCMES-ISO
G1	12	C7	AX	75	80	F	6.12	0.55	11.1	Tremolite			AS>5, 3:1, AFB>5, 3:1, PCMEF-US, PCMES-US, PCMEF-ISO, PCMES-ISO
G1	12	C7	AX	76	81	F	8.6	0.5	17.2	Tremolite			AS>5, 3:1, AFB>5, 3:1, PCMEF-US, PCMES-US, PCMEF-ISO, PCMES-ISO

Count Categories

AFB>5, 3:1	Asbestos Fibers and Bundles > 5um and 3:1	AS>5, 3:1	Asbestos Structures >5um and 3:1
PAS	Primary Asbestos Structures	PCMEF-ISO	PCM Equivalent Fibers-ISO
PCMEF-US	PCM Equivalent Fibers-NIOSH	PCMES-ISO	PCM Equivalent Structures-ISO
PCMES-US	PCM Equivalent Structures-NIOSH	TAS	Total Asbestos Structures

Lab/Cor, Inc.
7619 6th Ave Nw
Seattle, WA 98117

Final Report

Phone: (206) 781-0155
Fax: (206) 789-8424
http://www.labcor.net

A Professional Service Corporation in the Northwest

ISO 10312, Direct Raw Data

Job Number: 070434 **SEA**
Client: Idaho National Laboratory
Project Name: RARE

Report Number: 070434R06
Date Received: 4/23/2007

Client Sample No: **FB-2-R4** Lab/Cor Sample No: **S29**
Client Description: **Date Sampled: 4/16/2007**

Gr	No.	Loc.	ID	Prim	Tot	Class	Len	Wid	Asp	Analyte	Elements	Comment	Count Categories
G1	12	C7	AX	77	82	F	9.8	0.85	11.5	Tremolite			AS>5, 3:1, AFB>5, 3:1, PCMEF-US, PCMES-US, PCMEF-ISO, PCMES-ISO
G1	13	E7	AX	78		MD 1-1	16	6.5	2.5	Tremolite			AS>5, 3:1
G1	13	E7	AX		83	MF	7	0.5	14	Tremolite			AFB>5, 3:1, PCMEF-US, PCMEF-ISO
G1	13	E7	AX	79	84	F	2	0.65	3.1	Tremolite			
G1	13	E7	AX	80	85	F	2	0.5	4	Tremolite			
G1	13	E7	AX	81	86	F	5.1	1.5	3.4	Tremolite			PCMEF-US, PCMES-US, PCMEF-ISO, PCMES-ISO
G1	14	G7	AX	82	87	F	26	1.5	17.3	Tremolite			AS>5, 3:1, AFB>5, 3:1, PCMEF-US, PCMES-US, PCMEF-ISO, PCMES-ISO
G1	14	G7	AX	83	88	F	12	0.6	20	Tremolite			AS>5, 3:1, AFB>5, 3:1, PCMEF-US, PCMES-US, PCMEF-ISO, PCMES-ISO
G1	14	G7	AX	84	89	F	3.65	0.6	6.1	Tremolite			
G1	14	G7	AX	85	90	F	7	0.75	9.3	Tremolite			AS>5, 3:1, AFB>5, 3:1, PCMEF-US, PCMES-US, PCMEF-ISO, PCMES-ISO
G1	15	I7	AX	86	91	F	5.65	1.45	3.9	Tremolite			PCMEF-US, PCMES-US, PCMEF-ISO, PCMES-ISO
G1	15	I7	AX	87	92	F	4	0.8	5	Tremolite			
G1	15	I7	AX	88	93	F	1.5	0.2	7.5	Tremolite			
G1	15	I7	AX	89	94	F	2.5	0.5	5	Tremolite			
G1	15	I7	AX	90	95	F	2.8	0.7	4	Tremolite			
G1	16	J9	AX	91	96	F	7.75	1.8	4.3	Tremolite			PCMEF-US, PCMES-US, PCMEF-ISO, PCMES-ISO
G1	16	J9	AX	92	97	F	7	0.38	18.4	Tremolite			AS>5, 3:1, AFB>5, 3:1, PCMEF-US, PCMES-US, PCMEF-ISO, PCMES-ISO
G1	16	J9	AX	93	98	F	6.2	1.2	5.2	Tremolite			AS>5, 3:1, AFB>5, 3:1, PCMEF-US, PCMES-US, PCMEF-ISO, PCMES-ISO
G1	16	J9	AX	94		CD 2-2	20.25	3.75	5.4	Tremolite			AS>5, 3:1, PCMES-US
G1	16	J9	AX		99	CF	16.85	1.5	11.2	Tremolite			AFB>5, 3:1, PCMEF-US, PCMEF-ISO
G1	16	J9	AX		100	CF	16.5	0.8	20.6	Tremolite			AFB>5, 3:1, PCMEF-US, PCMEF-ISO
G1	16	J9	AX	95	101	F	14	2	7	Tremolite			AS>5, 3:1, AFB>5, 3:1, PCMEF-US, PCMES-US, PCMEF-ISO, PCMES-ISO
G1	16	J9	AX	96	102	F	9.5	2	4.8	Tremolite			PCMEF-US, PCMES-US, PCMES-ISO, PCMEF-ISO

Count Categories

AFB>5, 3:1	Asbestos Fibers and Bundles > 5um and 3:1	AS>5, 3:1	Asbestos Structures >5um and 3:1
PAS	Primary Asbestos Structures	PCMEF-ISO	PCM Equivalent Fibers-ISO
PCMEF-US	PCM Equivalent Fibers-NIOSH	PCMES-ISO	PCM Equivalent Structures-ISO
PCMES-US	PCM Equivalent Structures-NIOSH	TAS	Total Asbestos Structures

Lab/Cor, Inc.
7619 6th Ave Nw
Seattle, WA 98117

Final Report

Phone: (206) 781-0155
Fax: (206) 789-8424
http://www.labcor.net

A Professional Service Corporation in the Northwest

ISO 10312, Direct Raw Data

Job Number: 070434 **SEA**
Client: Idaho National Laboratory
Project Name: RARE

Report Number: 070434R06
Date Received: 4/23/2007

Client Sample No: **FB-2-R4** Lab/Cor Sample No: **S29**
Client Description: **Date Sampled: 4/16/2007**

Gr	No.	Loc.	ID	Prim	Tot	Class	Len	Wid	Asp	Analyte	Elements	Comment	Count Categories
G1	16	J9	AX	97	103	F	3.8	0.15	25.3	Tremolite			
G1	16	J9	AX	98		MD 2-0	8.5	5	1.7	Tremolite			AS>5, 3:1
G1	16	J9	AX		104	MF	4.5	0.65	6.9	Tremolite			
G1	16	J9	AX		105	MF	3.9	0.55	7.1	Tremolite			
G1	16	J9	AX	99	106	F	5.55	0.7	7.9	Tremolite			AS>5, 3:1, AFB>5, 3:1, PCMEF-US, PCMES-US, PCMEF-ISO, PCMES-ISO
G1	17	H9	AX	100	107	F	22	1.75	12.6	Tremolite			AS>5, 3:1, AFB>5, 3:1, PCMES-US, PCMEF-US, PCMEF-ISO, PCMES-ISO
G1	17	H9	AX	101	108	F	3.3	0.65	5.1	Tremolite			
G1	17	H9	AX	102	109	F	4.35	0.75	5.8	Tremolite			
G1	17	H9	AX	103	110	F	1.35	0.4	3.4	Tremolite			
G1	18	F9	AX	104	111	F	3.1	0.68	4.6	Tremolite			
G1	18	F9	AX	105	112	F	1.7	0.12	14.2	Tremolite			
G1	18	F9	AX	106	113	F	5	0.5	10	Tremolite			
G1	18	F9	AX	107	114	F	14	2.6	5.4	Tremolite			AS>5, 3:1, AFB>5, 3:1, PCMEF-US, PCMES-US, PCMEF-ISO, PCMES-ISO
G1	18	F9	AX	108		MD 1-0	5	1.8	2.8	Tremolite			
G1	18	F9	AX		115	MF	3	0.6	5	Tremolite			
G1	18	F9	AX	109		CD 2-1	8.5	4	2.1	Tremolite			AS>5, 3:1
G1	18	F9	AX		116	CB	6.8	1.85	3.7	Tremolite			AFB>5, 3:1, PCMEF-US, PCMEF-ISO
G1	18	F9	AX		117	CF	4.35	0.8	5.4	Tremolite			
G1	18	F9	AX	110	118	F	2	0.6	3.3	Tremolite			
G1	19	D9	AX	111	119	F	3.85	0.5	7.7	Tremolite			
G1	19	D9	AX	112	120	F	27	3.5	7.7	Tremolite			AS>5, 3:1, AFB>5, 3:1, PCMEF-US, PCMES-US
G1	19	D9	AX	113	121	F	1.2	0.35	3.4	Tremolite			
G1	19	D9	AX	114	122	F	5.2	0.75	6.9	Tremolite			AS>5, 3:1, AFB>5, 3:1, PCMEF-US, PCMES-US, PCMEF-ISO, PCMES-ISO
G1	19	D9	AX	115	123	F	4	0.3	13.3	Tremolite			
G1	20	B9	AX	116	124	F	2.5	0.45	5.6	Tremolite			
G1	20	B9	AX	117	125	F	6	0.55	10.9	Tremolite			AS>5, 3:1, AFB>5, 3:1, PCMEF-US, PCMES-US, PCMEF-ISO, PCMES-ISO
G1	20	B9	AX	118	126	F	13	3	4.3	Tremolite			PCMEF-US, PCMES-US, PCMEF-ISO, PCMES-ISO

Count Categories

AFB>5, 3:1	Asbestos Fibers and Bundles > 5um and 3:1	AS>5, 3:1	Asbestos Structures >5um and 3:1
PAS	Primary Asbestos Structures	PCMEF-ISO	PCM Equivalent Fibers-ISO
PCMEF-US	PCM Equivalent Fibers-NIOSH	PCMES-ISO	PCM Equivalent Structures-ISO
PCMES-US	PCM Equivalent Structures-NIOSH	TAS	Total Asbestos Structures

Lab/Cor, Inc.
7619 6th Ave Nw
Seattle, WA 98117

Final Report

Phone: (206) 781-0155
Fax: (206) 789-8424
http://www.labcor.net

A Professional Service Corporation in the Northwest

ISO 10312, Direct Raw Data

Job Number: 070434 **SEA**
Client: Idaho National Laboratory
Project Name: RARE

Report Number: 070434R06
Date Received: 4/23/2007

Client Sample No: **FB-2-R4** Lab/Cor Sample No: **S29**
Client Description: **Date Sampled: 4/16/2007**

Gr	No.	Loc.	ID	Prim	Tot	Class	Len	Wid	Asp	Analyte	Elements	Comment	Count Categories
G2	21	A2	AX	119	127	F	7.5	0.45	16.7	Tremolite			AS>5, 3:1, AFB>5, 3:1, PCMEF-US, PCMES-US, PCMEF-ISO, PCMES-ISO
G2	21	A2	AX	120		MD 1-0	5.2	2.5	2.1	Tremolite			AS>5, 3:1
G2	21	A2	AX		128	MF	3.2	0.5	6.4	Tremolite			
G2	21	A2	AX	121	129	F	1.75	0.5	3.5	Tremolite			
G2	22	C2	AX	122	130	F	6	1.25	4.8	Tremolite			PCMEF-US, PCMES-US, PCMEF-ISO, PCMES-ISO
G2	22	C2	AX	123	131	F	2.2	0.75	2.9	Tremolite			
G2	22	C2	AX	124	132	F	5.1	1	5.1	Tremolite			AS>5, 3:1, AFB>5, 3:1, PCMEF-US, PCMES-US, PCMEF-ISO, PCMES-ISO
G2	22	C2	AX	125	133	F	14.2	1.8	7.9	Tremolite			AFB>5, 3:1, AS>5, 3:1, PCMEF-US, PCMES-US, PCMEF-ISO, PCMES-ISO
G2	22	C2	AX	126	134	F	7.7	2	3.8	Tremolite			PCMEF-US, PCMES-US, PCMEF-ISO, PCMES-ISO
G2	22	C2	AX	127	135	F	7	1.1	6.4	Tremolite			AS>5, 3:1, AFB>5, 3:1, PCMEF-US, PCMES-US, PCMEF-ISO, PCMES-ISO
G2	22	C2	AX	128	136	F	12	0.65	18.5	Tremolite			AS>5, 3:1, AFB>5, 3:1, PCMEF-US, PCMES-US, PCMEF-ISO, PCMES-ISO
G2	23	E2	AX	129	137	F	6.85	1.8	3.8	Tremolite			PCMEF-US, PCMES-US, PCMEF-ISO, PCMES-ISO
G2	23	E2	AX	130	138	F	7.5	1.5	5	Tremolite			AS>5, 3:1, AFB>5, 3:1, PCMEF-US, PCMES-US, PCMEF-ISO, PCMES-ISO
G2	23	E2	AX	131	139	F	1.75	0.2	8.8	Tremolite			
G2	23	E2	AX	132	140	F	7.2	0.75	9.6	Tremolite			AS>5, 3:1, AFB>5, 3:1, PCMEF-US, PCMES-US, PCMEF-ISO, PCMES-ISO
G2	24	G2	AX	133	141	F	2.1	0.7	3	Tremolite			
G2	24	G2	AX	134	142	F	4	0.55	7.3	Tremolite			
G2	24	G2	AX	135	143	F	13	0.4	32.5	Tremolite			AS>5, 3:1, AFB>5, 3:1, PCMEF-US, PCMES-US, PCMEF-ISO, PCMES-ISO
G2	24	G2	AX	136	144	F	5	0.5	10	Tremolite			
G2	24	G2	AX	137	145	F	5.2	1.12	4.6	Tremolite			PCMEF-US, PCMES-US, PCMEF-ISO, PCMES-ISO
G2	24	G2	AX	138	146	F	17	1.5	11.3	Tremolite			AS>5, 3:1, AFB>5, 3:1, PCMEF-US, PCMES-US, PCMEF-ISO, PCMES-ISO
G2	25	I2	AX	139	147	F	20.8	1.2	17.3	Tremolite			AS>5, 3:1, AFB>5, 3:1, PCMEF-US, PCMES-US, PCMEF-ISO, PCMES-ISO

Count Categories

AFB>5, 3:1	Asbestos Fibers and Bundles > 5um and 3:1	AS>5, 3:1	Asbestos Structures >5um and 3:1
PAS	Primary Asbestos Structures	PCMEF-ISO	PCM Equivalent Fibers-ISO
PCMEF-US	PCM Equivalent Fibers-NIOSH	PCMES-ISO	PCM Equivalent Structures-ISO
PCMES-US	PCM Equivalent Structures-NIOSH	TAS	Total Asbestos Structures

Lab/Cor, Inc.
7619 6th Ave Nw
Seattle, WA 98117

Final Report

Phone: (206) 781-0155
Fax: (206) 789-8424
http://www.labcor.net

A Professional Service Corporation in the Northwest

ISO 10312, Direct Raw Data

Job Number: 070434 **SEA**
Client: Idaho National Laboratory
Project Name: RARE

Report Number: 070434R06
Date Received: 4/23/2007

Client Sample No: **FB-2-R4** Lab/Cor Sample No: **S29**
Client Description: **Date Sampled: 4/16/2007**

Gr	No.	Loc.	ID	Prim	Tot	Class	Len	Wid	Asp	Analyte	Elements	Comment	Count Categories
G2	25	I2	AX	140	148	F	7.2	0.8	9	Tremolite			AS>5, 3:1, AFB>5, 3:1, PCMEF-US, PCMES-US, PCMEF-ISO, PCMES-ISO
G2	25	I2	AX	141	149	F	4.35	0.75	5.8	Tremolite			
G2	25	I2	AX	142	150	F	12.7	0.65	19.5	Tremolite			AS>5, 3:1, AFB>5, 3:1, PCMEF-US, PCMES-US, PCMEF-ISO, PCMES-ISO
G2	26	J4	AX	143	151	F	6.5	1.2	5.4	Tremolite			AS>5, 3:1, AFB>5, 3:1, PCMEF-US, PCMES-US, PCMEF-ISO, PCMES-ISO
G2	26	J4	AX	144	152	F	2.2	0.55	4	Tremolite			
G2	26	J4	AX	145	153	F	10.5	1.2	8.8	Tremolite			AS>5, 3:1, AFB>5, 3:1, PCMEF-US, PCMES-US, PCMEF-ISO, PCMES-ISO
G2	26	J4	AX	146	154	F	2.75	0.9	3.1	Tremolite			
G2	26	J4	AX	147	155	F	23.2	1.2	19.3	Tremolite			AS>5, 3:1, AFB>5, 3:1, PCMEF-US, PCMES-US, PCMEF-ISO, PCMES-ISO
G2	27	H4	AX	148	156	F	11	0.38	28.9	Tremolite			AS>5, 3:1, AFB>5, 3:1, PCMEF-US, PCMES-US, PCMEF-ISO, PCMES-ISO
G2	27	H4	AX	149	157	F	14.35	1.28	11.2	Tremolite			AS>5, 3:1, AFB>5, 3:1, PCMEF-US, PCMES-US, PCMEF-ISO, PCMES-ISO
G2	27	H4	AX	150	158	F	2.65	0.3	8.8	Tremolite			
G2	27	H4	AX	151	159	F	1.65	0.35	4.7	Tremolite			
G2	27	H4	AX	152	160	F	10.7	0.65	16.5	Tremolite			AS>5, 3:1, AFB>5, 3:1, PCMEF-US, PCMES-US, PCMEF-ISO, PCMES-ISO
G2	27	H4	AX	153	161	F	10.65	1.2	8.9	Tremolite			AS>5, 3:1, AFB>5, 3:1, PCMEF-US, PCMES-US, PCMEF-ISO, PCMES-ISO
G2	28	F4	AX	154	162	F	4	0.85	4.7	Tremolite			
G2	28	F4	AX	155	163	F	3.85	0.6	6.4	Tremolite			
G2	28	F4	AX	156	164	F	12	2	6	Tremolite			AS>5, 3:1, AFB>5, 3:1, PCMEF-US, PCMES-US, PCMEF-ISO, PCMES-ISO
G2	28	F4	AX	157	165	F	3.15	0.45	7	Tremolite			
G2	29	D4	AX	158	166	F	5.8	1	5.8	Tremolite			AS>5, 3:1, AFB>5, 3:1, PCMEF-US, PCMES-US, PCMEF-ISO, PCMES-ISO
G2	29	D4	AX	159	167	F	5	1.1	4.5	Tremolite			
G2	29	D4	AX	160	168	F	18.5	1.2	15.4	Tremolite			AS>5, 3:1, AFB>5, 3:1, PCMEF-US, PCMES-US, PCMEF-ISO, PCMES-ISO

Count Categories

AFB>5, 3:1	Asbestos Fibers and Bundles > 5um and 3:1	AS>5, 3:1	Asbestos Structures >5um and 3:1
PAS	Primary Asbestos Structures	PCMEF-ISO	PCM Equivalent Fibers-ISO
PCMEF-US	PCM Equivalent Fibers-NIOSH	PCMES-ISO	PCM Equivalent Structures-ISO
PCMES-US	PCM Equivalent Structures-NIOSH	TAS	Total Asbestos Structures

Lab/Cor, Inc.
7619 6th Ave Nw
Seattle, WA 98117

Final Report

Phone: (206) 781-0155
Fax: (206) 789-8424
http://www.labcor.net

A Professional Service Corporation in the Northwest

ISO 10312, Direct Raw Data

Job Number: 070434 **SEA**
Client: Idaho National Laboratory
Project Name: RARE

Report Number: 070434R06
Date Received: 4/23/2007

Client Sample No: **FB-2-R4** Lab/Cor Sample No: **S29**
Client Description: **Date Sampled: 4/16/2007**

Gr	No.	Loc.	ID	Prim	Tot	Class	Len	Wid	Asp	Analyte	Elements	Comment	Count Categories
G2	29	D4	AX	161	169	F	2.5	0.45	5.6	Tremolite			
G2	29	D4	AX	162	170	F	10.5	1.2	8.8	Tremolite			AS>5, 3:1, AFB>5, 3:1, PCMEF-US, PCMES-US, PCMEF-ISO, PCMES-ISO
G2	29	D4	AX	163	171	F	10	2	5	Tremolite			AS>5, 3:1, AFB>5, 3:1, PCMEF-US, PCMES-US, PCMEF-ISO, PCMES-ISO
G2	29	D4	AX	164	172	F	3	1	3	Tremolite			
G2	30	B4	AX	165	173	F	7.7	1.5	5.1	Tremolite			AS>5, 3:1, AFB>5, 3:1, PCMEF-US, PCMES-US, PCMEF-ISO, PCMES-ISO
G2	30	B4	AX	166	174	F	2	0.6	3.3	Tremolite			
G2	30	B4	AX	167	175	F	4.25	0.6	7.1	Tremolite			
G2	30	B4	AX	168	176	F	5.6	1	5.6	Tremolite			AS>5, 3:1, AFB>5, 3:1, PCMEF-US, PCMES-US, PCMEF-ISO, PCMES-ISO
G2	31	A7	AX	169	177	F	2.7	0.2	13.5	Tremolite			
G2	31	A7	AX	170	178	F	4	0.4	10	Tremolite			
G2	31	A7	AX	171	179	F	5.8	1.25	4.6	Tremolite			PCMEF-US, PCMES-US, PCMEF-ISO, PCMES-ISO
G2	32	C7	AX	172	180	F	6.55	0.4	16.4	Tremolite			AS>5, 3:1, AFB>5, 3:1, PCMEF-US, PCMES-US, PCMES-ISO, PCMEF-ISO
G2	32	C7	AX	173	181	F	3.35	0.38	8.8	Tremolite			
G2	32	C7	AX	174		CD 2-1	7	4	1.8	Tremolite			AS>5, 3:1
G2	32	C7	AX		182	CF	5.75	1	5.8	Tremolite			AFB>5, 3:1, PCMEF-US, PCMEF-ISO
G2	32	C7	AX		183	CF	4.3	0.38	11.3	Tremolite			
G2	32	C7	AX	175	184	F	3.85	0.4	9.6	Tremolite			
G2	32	C7	AX	176	185	F	6.2	1.85	3.4	Tremolite			PCMEF-US, PCMES-US, PCMEF-ISO, PCMES-ISO
G2	32	C7	AX	177	186	F	5.6	1.2	4.7	Tremolite			PCMEF-US, PCMES-US, PCMEF-ISO, PCMES-ISO
G2	32	C7	AX	178	187	F	2.6	0.7	3.7	Tremolite			
G2	33	E7	AX	179	188	F	4	0.5	8	Tremolite			
G2	33	E7	AX	180	189	F	3.2	0.75	4.3	Tremolite			
G2	33	E7	AX	181	190	F	4.2	0.6	7	Tremolite			
G2	33	E7	AX	182	191	F	1.3	0.38	3.4	Tremolite			
G2	33	E7	AX	183	192	F	17.2	1.8	9.6	Tremolite			AS>5, 3:1, AFB>5, 3:1, PCMEF-US, PCMES-US, PCMEF-ISO, PCMES-ISO

Count Categories

AFB>5, 3:1	Asbestos Fibers and Bundles > 5um and 3:1	AS>5, 3:1	Asbestos Structures >5um and 3:1
PAS	Primary Asbestos Structures	PCMEF-ISO	PCM Equivalent Fibers-ISO
PCMEF-US	PCM Equivalent Fibers-NIOSH	PCMES-ISO	PCM Equivalent Structures-ISO
PCMES-US	PCM Equivalent Structures-NIOSH	TAS	Total Asbestos Structures

Lab/Cor, Inc.
7619 6th Ave Nw
Seattle, WA 98117

Final Report

Phone: (206) 781-0155
Fax: (206) 789-8424
http://www.labcor.net

A Professional Service Corporation in the Northwest

ISO 10312, Direct Raw Data

Job Number: 070434 **SEA**
Client: Idaho National Laboratory
Project Name: RARE

Report Number: 070434R06
Date Received: 4/23/2007

Client Sample No: **FB-2-R4** Lab/Cor Sample No: **S29**
Client Description: **Date Sampled: 4/16/2007**

Gr	No.	Loc.	ID	Prim	Tot	Class	Len	Wid	Asp	Analyte	Elements	Comment	Count Categories
G2	33	E7	AX	184	193	F	5.5	0.8	6.9	Tremolite			AS>5, 3:1, AFB>5, 3:1, PCMEF-US, PCMES-US, PCMEF-ISO, PCMES-ISO
G2	33	E7	AX	185	194	B	40	3	13.3	Tremolite			AFB>5, 3:1, AS>5, 3:1, PCMES-US, PCMEF-US, PCMES-ISO, PCMEF-ISO
G2	33	E7	AX	186	195	F	11.2	0.85	13.2	Tremolite			AS>5, 3:1, AFB>5, 3:1, PCMEF-US, PCMES-US, PCMEF-ISO, PCMES-ISO
G2	33	E7	AX	187	196	F	3.2	0.7	4.6	Tremolite			
G2	34	G7	AX	188	197	F	3	0.8	3.8	Tremolite			
G2	34	G7	AX	189	198	F	14	0.75	18.7	Tremolite			AS>5, 3:1, AFB>5, 3:1, PCMEF-US, PCMES-US, PCMEF-ISO, PCMES-ISO
G2	34	G7	AX	190	199	F	60	4	15	Tremolite			AS>5, 3:1, AFB>5, 3:1, PCMEF-US, PCMES-US
G2	34	G7	AX	191	200	F	10.5	1.85	5.7	Tremolite			AS>5, 3:1, AFB>5, 3:1, PCMEF-US, PCMES-US, PCMEF-ISO, PCMES-ISO
G2	34	G7	AX	192	201	F	5	1.2	4.2	Tremolite			
G2	34	G7	AX	193		MD 1-0	7.5	3	2.5	Tremolite			AS>5, 3:1
G2	34	G7	AX		202	MF	5	0.4	12.5	Tremolite			
G2	35	I7	AX	194	203	F	5.25	0.7	7.5	Tremolite			AS>5, 3:1, AFB>5, 3:1, PCMEF-US, PCMES-US, PCMEF-ISO, PCMES-ISO
G2	35	I7	AX	195	204	F	18	4.5	4	Tremolite			PCMEF-US, PCMES-US

Count Categories

AFB>5, 3:1	Asbestos Fibers and Bundles > 5um and 3:1	AS>5, 3:1	Asbestos Structures >5um and 3:1
PAS	Primary Asbestos Structures	PCMEF-ISO	PCM Equivalent Fibers-ISO
PCMEF-US	PCM Equivalent Fibers-NIOSH	PCMES-ISO	PCM Equivalent Structures-ISO
PCMES-US	PCM Equivalent Structures-NIOSH	TAS	Total Asbestos Structures

Lab/Cor, Inc.
7619 6th Ave Nw
Seattle, WA 98117

Final Report

Phone: (206) 781-0155
Fax: (206) 789-8424
http://www.labcor.net

A Professional Service Corporation in the Northwest

ISO 10312, Direct Raw Data

Job Number: 070434 **SEA**
Client: Idaho National Laboratory
Project Name: RARE

Report Number: 070434R06
Date Received: 4/23/2007

Client Sample No: **FB-2-R5** Lab/Cor Sample No: **S30**
Client Description: **Date Sampled: 4/16/2007**

Gr	No.	Loc.	ID	Prim	Tot	Class	Len	Wid	Asp	Analyte	Elements	Comment	Count Categories
G1	1	A2	AX	1	1	F	1.7	0.22	7.7	Tremolite			
G1	1	A2	AX	2	2	F	1.6	0.2	8	Tremolite			
G1	1	A2	ADQ	3	3	F	13	0.65	20	Tremolite	Mg, Al, Si, Ca, Fe		AS>5, 3:1, AFB>5, 3:1, PCMEF-US, PCMES-US, PCMEF-ISO, PCMES-ISO

ItemType	ItemNum	Confirmed	Comment
Brightfield	J3579 BF		
Diffraction	J3579	KM 6/5/2007	5.3A IMAGE
Spectra	J3020		

Gr	No.	Loc.	ID	Prim	Tot	Class	Len	Wid	Asp	Analyte	Elements	Comment	Count Categories
G1	1	A2	AX	4		MD 1-1	5.8	3	1.9	Tremolite			AS>5, 3:1
G1	1	A2	AX		4	MF	5.8	0.38	15.3	Tremolite			AFB>5, 3:1, PCMEF-US, PCMEF-ISO
G1	1	A2	AX	5	5	F	16.35	1.85	8.8	Tremolite			AS>5, 3:1, AFB>5, 3:1, PCMEF-US, PCMES-US, PCMEF-ISO, PCMES-ISO
G1	1	A2	AX	6	6	F	4	0.5	8	Tremolite			
G1	1	A2	AX	7	7	F	13.6	1.2	11.3	Tremolite			AS>5, 3:1, AFB>5, 3:1, PCMEF-US, PCMES-US, PCMEF-ISO, PCMES-ISO
G1	2	C2	AX	8		MD 1-1	7.5	5.2	1.4	Tremolite			AS>5, 3:1
G1	2	C2	AX		8	MF	5.5	0.18	30.6	Tremolite			AFB>5, 3:1
G1	2	C2	AX	9	9	F	2.5	0.35	7.1	Tremolite			
G1	2	C2	AX	10	10	F	3	0.5	6	Tremolite			
G1	2	C2	AX	11	11	F	1.8	0.38	4.7	Tremolite			
G1	3	E2	AX	12	12	F	2	0.4	5	Tremolite			
G1	3	E2	AX	13	13	F	8.25	0.85	9.7	Tremolite			AS>5, 3:1, AFB>5, 3:1, PCMEF-US, PCMES-US, PCMEF-ISO, PCMES-ISO
G1	3	E2	AX	14	14	F	4.5	1	4.5	Tremolite			
G1	3	E2	AX	15	15	F	12.5	1.8	6.9	Tremolite			AS>5, 3:1, AFB>5, 3:1, PCMEF-US, PCMES-US, PCMEF-ISO, PCMES-ISO
G1	3	E2	AX	16	16	F	8.75	0.55	15.9	Tremolite			AS>5, 3:1, AFB>5, 3:1, PCMEF-US, PCMES-US, PCMEF-ISO, PCMES-ISO
G1	3	E2	AX	17		MD 1-0	4	4	1	Tremolite			
G1	3	E2	AX		17	MF	2.5	0.3	8.3	Tremolite			
G1	4	G2	AX	18	18	F	3.25	1.1	3	Tremolite			
G1	4	G2	AX	19	19	F	4.25	0.7	6.1	Tremolite			
G1	4	G2	AX	20	20	F	4.8	1	4.8	Tremolite			

Count Categories

AFB>5, 3:1	Asbestos Fibers and Bundles > 5um and 3:1	AS>5, 3:1	Asbestos Structures >5um and 3:1
PAS	Primary Asbestos Structures	PCMEF-ISO	PCM Equivalent Fibers-ISO
PCMEF-US	PCM Equivalent Fibers-NIOSH	PCMES-ISO	PCM Equivalent Structures-ISO
PCMES-US	PCM Equivalent Structures-NIOSH	TAS	Total Asbestos Structures

Lab/Cor, Inc.
7619 6th Ave Nw
Seattle, WA 98117

Final Report

Phone: (206) 781-0155
Fax: (206) 789-8424
http://www.labcor.net

A Professional Service Corporation in the Northwest

ISO 10312, Direct Raw Data

Job Number: 070434 **SEA**
Client: Idaho National Laboratory
Project Name: RARE

Report Number: 070434R06
Date Received: 4/23/2007

Client Sample No: **FB-2-R5** Lab/Cor Sample No: **S30**
Client Description: **Date Sampled: 4/16/2007**

Gr	No.	Loc.	ID	Prim	Tot	Class	Len	Wid	Asp	Analyte	Elements	Comment	Count Categories
G1	4	G2	AX	21	21	F	2.65	0.38	7	Tremolite			
G1	4	G2	AX	22	22	F	2.4	0.18	13.3	Tremolite			
G1	5	I2	AX	23	23	F	5	0.65	7.7	Tremolite			
G1	5	I2	AX	24	24	F	3	0.65	4.6	Tremolite			
G1	5	I2	AX	25	25	F	4	0.9	4.4	Tremolite			
G1	5	I2	AX	26	26	F	3	0.5	6	Tremolite			
G1	5	I2	AX	27	27	F	1.65	0.38	4.3	Tremolite			
G1	5	I2	AX	28	28	F	9.65	2.5	3.9	Tremolite			PCMEF-US, PCMES-US, PCMEF-ISO, PCMES-ISO
G1	6	J4	AX	29	29	F	9.25	0.6	15.4	Tremolite			AS>5, 3:1, AFB>5, 3:1, PCMEF-US, PCMES-US, PCMEF-ISO, PCMES-ISO
G1	6	J4	AX	30	30	F	6.12	0.7	8.7	Tremolite			AS>5, 3:1, AFB>5, 3:1, PCMEF-US, PCMES-US, PCMEF-ISO, PCMES-ISO
G1	6	J4	AX	31		CD 2-1	5.5	4	1.4	Tremolite			AS>5, 3:1
G1	6	J4	AX		31	CF	5.5	0.3	18.3	Tremolite			AFB>5, 3:1, PCMEF-US, PCMEF-ISO
G1	6	J4	AX		32	CF	4	0.75	5.3	Tremolite			
G1	7	H4	AX	32	33	F	8.8	0.8	11	Tremolite			AS>5, 3:1, AFB>5, 3:1, PCMEF-US, PCMES-US, PCMEF-ISO, PCMES-ISO
G1	7	H4	AX	33	34	F	5.4	0.5	10.8	Tremolite			AS>5, 3:1, AFB>5, 3:1, PCMEF-US, PCMES-US, PCMEF-ISO, PCMES-ISO
G1	8	F4	AX	34	35	F	5.25	0.8	6.6	Tremolite			AS>5, 3:1, AFB>5, 3:1, PCMEF-US, PCMES-US, PCMEF-ISO, PCMES-ISO
G1	8	F4	AX	35	36	F	4	0.8	5	Tremolite			
G1	8	F4	AX	36	37	F	4.8	0.75	6.4	Tremolite			
G1	9	D4	AX	37	38	F	2.5	0.6	4.2	Tremolite			
G1	9	D4	AX	38	39	B	9	2.8	3.2	Tremolite			AFB>5, 3:1, AS>5, 3:1, PCMES-US, PCMEF-US, PCMES-ISO, PCMEF-ISO
G1	9	D4	AX	39	40	F	1.65	0.3	5.5	Tremolite			
G1	9	D4	AX	40	41	F	2	0.3	6.7	Tremolite			
G1	9	D4	AX	41	42	F	3.1	0.35	8.9	Tremolite			
G1	9	D4	AX	42	43	F	1	0.2	5	Tremolite			
G1	9	D4	AX	43	44	F	5.3	0.8	6.6	Tremolite			AS>5, 3:1, AFB>5, 3:1, PCMEF-US, PCMES-US, PCMEF-ISO, PCMES-ISO

Count Categories

AFB>5, 3:1	Asbestos Fibers and Bundles > 5um and 3:1	AS>5, 3:1	Asbestos Structures >5um and 3:1
PAS	Primary Asbestos Structures	PCMEF-ISO	PCM Equivalent Fibers-ISO
PCMEF-US	PCM Equivalent Fibers-NIOSH	PCMES-ISO	PCM Equivalent Structures-ISO
PCMES-US	PCM Equivalent Structures-NIOSH	TAS	Total Asbestos Structures

Lab/Cor, Inc.
7619 6th Ave Nw
Seattle, WA 98117

Final Report

Phone: (206) 781-0155
Fax: (206) 789-8424
http://www.labcor.net

A Professional Service Corporation in the Northwest

ISO 10312, Direct Raw Data

Job Number: 070434 **SEA**
Client: Idaho National Laboratory
Project Name: RARE

Report Number: 070434R06
Date Received: 4/23/2007

Client Sample No: **FB-2-R5** Lab/Cor Sample No: **S30**
Client Description: **Date Sampled: 4/16/2007**

Gr	No.	Loc.	ID	Prim	Tot	Class	Len	Wid	Asp	Analyte	Elements	Comment	Count Categories
G1	10	B4	AX	44	45	F	5.15	0.75	6.9	Tremolite			AS>5, 3:1, AFB>5, 3:1, PCMEF-US, PCMES-US, PCMES-ISO, PCMEF-ISO
G1	10	B4	AX	45	46	F	2.2	0.7	3.1	Tremolite			
G1	10	B4	AX	46	47	F	7	0.55	12.7	Tremolite			AS>5, 3:1, AFB>5, 3:1, PCMEF-US, PCMES-US, PCMEF-ISO, PCMES-ISO
G1	10	B4	AX	47	48	F	2.5	0.55	4.5	Tremolite			
G1	10	B4	AX	48	49	F	9	0.65	13.8	Tremolite			AS>5, 3:1, AFB>5, 3:1, PCMEF-US, PCMES-US, PCMEF-ISO, PCMES-ISO
G1	10	B4	NAM	49	50	F	7.7	0.75	10.3	Non Asbestos Mineral	Mg, Si	POSSIBLE TALC	
G1	10	B4	AX	50	51	F	2.7	0.65	4.2	Tremolite			
G1	11	A7	AX	51	52	F	11	1.3	8.5	Tremolite			AS>5, 3:1, AFB>5, 3:1, PCMEF-US, PCMES-US, PCMEF-ISO, PCMES-ISO
G1	11	A7	AZQ	52	53	F	3	0.4	7.5	Tremolite	Mg, Si, Ca, Fe		

ItemType	ItemNum	Confirmed	Comment
Brightfield	J3580 BF		
Diffraction	J3580	KM 6/5/2007	ZONE AXIS [2 0 1]
Spectra	J3021		

Gr	No.	Loc.	ID	Prim	Tot	Class	Len	Wid	Asp	Analyte	Elements	Comment	Count Categories
G1	11	A7	AX	53	54	F	2.5	0.2	12.5	Tremolite			
G1	11	A7	AX	54	55	F	8.4	1.85	4.5	Tremolite			PCMEF-US, PCMES-US, PCMEF-ISO, PCMES-ISO
G1	12	C7	AX	55	56	F	1.8	0.45	4	Tremolite			
G1	12	C7	AX	56	57	B	11	2	5.5	Tremolite			AFB>5, 3:1, AS>5, 3:1, PCMES-US, PCMEF-US, PCMES-ISO, PCMEF-ISO
G1	12	C7	AX	57	58	F	3.25	0.2	16.2	Tremolite			
G1	12	C7	AX	58	59	F	2.75	0.4	6.9	Tremolite			
G1	13	E7	AX	59		MD 2-1	7.8	7	1.1	Tremolite			AS>5, 3:1
G1	13	E7	AX		60	MF	7	1.2	5.8	Tremolite			AFB>5, 3:1, PCMEF-US, PCMEF-ISO
G1	13	E7	AX		61	MF	2.7	0.35	7.7	Tremolite			
G1	13	E7	AX	60	62	F	1.85	0.4	4.6	Tremolite			
G1	13	E7	AX	61	63	F	15	1.7	8.8	Tremolite			AS>5, 3:1, AFB>5, 3:1, PCMEF-US, PCMES-US, PCMEF-ISO, PCMES-ISO

Count Categories

AFB>5, 3:1	Asbestos Fibers and Bundles > 5um and 3:1	AS>5, 3:1	Asbestos Structures >5um and 3:1
PAS	Primary Asbestos Structures	PCMEF-ISO	PCM Equivalent Fibers-ISO
PCMEF-US	PCM Equivalent Fibers-NIOSH	PCMES-ISO	PCM Equivalent Structures-ISO
PCMES-US	PCM Equivalent Structures-NIOSH	TAS	Total Asbestos Structures

Lab/Cor, Inc.
7619 6th Ave Nw
Seattle, WA 98117

Final Report

Phone: (206) 781-0155
Fax: (206) 789-8424
http://www.labcor.net

A Professional Service Corporation in the Northwest

ISO 10312, Direct Raw Data

Job Number: 070434 **SEA**
Client: Idaho National Laboratory
Project Name: RARE

Report Number: 070434R06
Date Received: 4/23/2007

Client Sample No: **FB-2-R5** Lab/Cor Sample No: **S30**
Client Description: **Date Sampled: 4/16/2007**

Gr	No.	Loc.	ID	Prim	Tot	Class	Len	Wid	Asp	Analyte	Elements	Comment	Count Categories
G1	13	E7	AX	62	64	F	6.5	0.8	8.1	Tremolite			AS>5, 3:1, AFB>5, 3:1, PCMEF-US, PCMES-US, PCMEF-ISO, PCMES-ISO
G1	13	E7	AX	63	65	F	3	0.7	4.3	Tremolite			
G1	13	E7	AX	64	66	F	15.8	2	7.9	Tremolite			AS>5, 3:1, AFB>5, 3:1, PCMEF-US, PCMES-US, PCMEF-ISO, PCMES-ISO
G1	13	E7	AX	65	67	F	4.2	0.55	7.6	Tremolite			
G1	13	E7	AX	66	68	F	4.5	0.4	11.2	Tremolite			
G1	13	E7	AX	67	69	F	5	0.55	9.1	Tremolite			
G1	13	E7	AX	68	70	F	9.75	0.7	13.9	Tremolite			AS>5, 3:1, AFB>5, 3:1, PCMEF-US, PCMES-US, PCMEF-ISO, PCMES-ISO
G1	14	G7	AX	69	71	F	3	0.4	7.5	Tremolite			
G1	15	I7	AX	70	72	F	2.5	0.5	5	Tremolite			
G1	15	I7	AX	71	73	F	4.2	0.5	8.4	Tremolite			
G1	15	I7	AX	72	74	F	11.1	0.7	15.9	Tremolite			AS>5, 3:1, AFB>5, 3:1, PCMEF-US, PCMES-US, PCMEF-ISO, PCMES-ISO
G1	16	J9	AX	73	75	F	1.75	0.22	8	Tremolite			
G1	16	J9	AX	74		MD 1-0	4	3.8	1.1	Tremolite			
G1	16	J9	AX		76	MF	4	1	4	Tremolite			
G1	16	J9	AX	75	77	F	11.8	1.75	6.7	Tremolite			AS>5, 3:1, AFB>5, 3:1, PCMEF-US, PCMES-US, PCMEF-ISO, PCMES-ISO
G1	16	J9	AX	76	78	F	2	0.35	5.7	Tremolite			
G1	17	H9	AX	77	79	F	14.35	1.8	8	Tremolite			AS>5, 3:1, AFB>5, 3:1, PCMEF-US, PCMES-US, PCMEF-ISO, PCMES-ISO
G1	17	H9	AX	78	80	F	24.2	0.68	35.6	Tremolite			AS>5, 3:1, AFB>5, 3:1, PCMEF-US, PCMES-US, PCMEF-ISO, PCMES-ISO
G1	17	H9	AX	79	81	F	2.5	0.35	7.1	Tremolite			
G1	17	H9	AX	80	82	F	2.65	0.7	3.8	Tremolite			
G1	17	H9	AX	81		MD 1-0	4.5	3.8	1.2	Tremolite			
G1	17	H9	AX		83	MF	2.7	0.4	6.8	Tremolite			
G1	17	H9	AX	82	84	F	20	3	6.7	Tremolite			AS>5, 3:1, AFB>5, 3:1, PCMEF-US, PCMES-US, PCMEF-ISO, PCMES-ISO
G1	17	H9	AX	83	85	F	5.12	0.6	8.5	Tremolite			AS>5, 3:1, AFB>5, 3:1, PCMEF-US, PCMES-US, PCMEF-ISO, PCMES-ISO

Count Categories

AFB>5, 3:1	Asbestos Fibers and Bundles > 5um and 3:1	AS>5, 3:1	Asbestos Structures >5um and 3:1
PAS	Primary Asbestos Structures	PCMEF-ISO	PCM Equivalent Fibers-ISO
PCMEF-US	PCM Equivalent Fibers-NIOSH	PCMES-ISO	PCM Equivalent Structures-ISO
PCMES-US	PCM Equivalent Structures-NIOSH	TAS	Total Asbestos Structures

Lab/Cor, Inc.
7619 6th Ave Nw
Seattle, WA 98117

Final Report

Phone: (206) 781-0155
Fax: (206) 789-8424
http://www.labcor.net

A Professional Service Corporation in the Northwest

ISO 10312, Direct Raw Data

Job Number: 070434 **SEA**
Client: Idaho National Laboratory
Project Name: RARE

Report Number: 070434R06
Date Received: 4/23/2007

Client Sample No: **FB-2-R5** Lab/Cor Sample No: **S30**
Client Description: **Date Sampled: 4/16/2007**

Gr	No.	Loc.	ID	Prim	Tot	Class	Len	Wid	Asp	Analyte	Elements	Comment	Count Categories
G1	18	F9	AX	84	86	F	8.65	0.75	11.5	Tremolite			AS>5, 3:1, AFB>5, 3:1, PCMEF-US, PCMES-US, PCMEF-ISO, PCMES-ISO
G1	18	F9	AX	85	87	F	1.75	0.2	8.8	Tremolite			
G1	18	F9	AX	86	88	F	3.2	0.2	16	Tremolite			
G1	19	D9	AX	87	89	F	15	0.75	20	Tremolite			AS>5, 3:1, AFB>5, 3:1, PCMEF-US, PCMES-US, PCMEF-ISO, PCMES-ISO
G1	19	D9	AX	88	90	F	5.75	0.8	7.2	Tremolite			AS>5, 3:1, AFB>5, 3:1, PCMEF-US, PCMES-US, PCMEF-ISO, PCMES-ISO
G1	19	D9	AX	89	91	F	1.25	0.25	5	Tremolite			
G1	19	D9	AX	90		MD 1-0	5	3	1.7	Tremolite			
G1	19	D9	AX		92	MF	5	0.85	5.9	Tremolite			
G1	20	B9	AX	91	93	F	4.9	0.75	6.5	Tremolite			
G1	20	B9	AX	92	94	F	27.5	0.8	34.4	Tremolite			AS>5, 3:1, AFB>5, 3:1, PCMEF-US, PCMES-US, PCMEF-ISO, PCMES-ISO
G1	20	B9	AX	93	95	F	4.5	0.75	6	Tremolite			
G1	20	B9	AX	94	96	F	4.2	0.38	11.1	Tremolite			
G2	21	A2	AX	95	97	F	9.75	0.8	12.2	Tremolite			AS>5, 3:1, AFB>5, 3:1, PCMEF-US, PCMES-US, PCMEF-ISO, PCMES-ISO
G2	21	A2	AX	96	98	F	4.35	0.25	17.4	Tremolite			
G2	21	A2	AX	97	99	F	2.65	0.52	5.1	Tremolite			
G2	21	A2	AX	98	100	F	5.3	0.9	5.9	Tremolite			AS>5, 3:1, AFB>5, 3:1, PCMEF-US, PCMES-US, PCMEF-ISO, PCMES-ISO
G2	22	C2	AX	99	101	F	18	0.7	25.7	Tremolite			AS>5, 3:1, AFB>5, 3:1, PCMEF-US, PCMES-US, PCMEF-ISO, PCMES-ISO
G2	22	C2	AX	100	102	F	2.75	0.6	4.6	Tremolite			
G2	22	C2	AX	101	103	F	2.85	0.35	8.1	Tremolite			
G2	22	C2	AX	102	104	F	3.1	0.85	3.6	Tremolite			
G2	22	C2	AX	103	105	F	4	0.4	10	Tremolite			
G2	22	C2	AX	104	106	F	11.5	1.1	10.5	Tremolite			AS>5, 3:1, AFB>5, 3:1, PCMEF-US, PCMES-US, PCMEF-ISO, PCMES-ISO
G2	23	E2	AX	105	107	F	5.75	1.25	4.6	Tremolite			PCMEF-US, PCMES-US, PCMEF-ISO, PCMES-ISO
G2	23	E2	AX	106	108	F	11	1	11	Tremolite			AS>5, 3:1, AFB>5, 3:1, PCMEF-US, PCMES-US, PCMEF-ISO, PCMES-ISO

Count Categories

AFB>5, 3:1	Asbestos Fibers and Bundles > 5um and 3:1	AS>5, 3:1	Asbestos Structures >5um and 3:1
PAS	Primary Asbestos Structures	PCMEF-ISO	PCM Equivalent Fibers-ISO
PCMEF-US	PCM Equivalent Fibers-NIOSH	PCMES-ISO	PCM Equivalent Structures-ISO
PCMES-US	PCM Equivalent Structures-NIOSH	TAS	Total Asbestos Structures

Lab/Cor, Inc.
7619 6th Ave Nw
Seattle, WA 98117

Final Report

Phone: (206) 781-0155
Fax: (206) 789-8424
http://www.labcor.net

A Professional Service Corporation in the Northwest

ISO 10312, Direct Raw Data

Job Number: 070434 **SEA**
Client: Idaho National Laboratory
Project Name: RARE

Report Number: 070434R06
Date Received: 4/23/2007

Client Sample No: **FB-2-R5** Lab/Cor Sample No: **S30**
Client Description: **Date Sampled: 4/16/2007**

Gr	No.	Loc.	ID	Prim	Tot	Class	Len	Wid	Asp	Analyte	Elements	Comment	Count Categories
G2	23	E2	AX	107	109	F	2.85	0.8	3.6	Tremolite			
G2	23	E2	AX	108	110	F	3.75	0.85	4.4	Tremolite			
G2	23	E2	AX	109	111	F	1.7	0.25	6.8	Tremolite			
G2	23	E2	AX	110	112	F	7	0.7	10	Tremolite			AS>5, 3:1, AFB>5, 3:1, PCMEF-US, PCMES-US, PCMEF-ISO, PCMES-ISO
G2	24	G2	AX	111		MD 1-1	9	2	4.5	Tremolite			AS>5, 3:1, PCMES-US, PCMES-ISO
G2	24	G2	AX		113	MF	8	0.75	10.7	Tremolite			AFB>5, 3:1, PCMEF-US, PCMEF-ISO
G2	24	G2	AX	112	114	F	9.5	0.65	14.6	Tremolite			AS>5, 3:1, AFB>5, 3:1, PCMEF-US, PCMES-US, PCMEF-ISO, PCMES-ISO
G2	25	I2	AX	113	115	F	7.5	0.65	11.5	Tremolite			AS>5, 3:1, AFB>5, 3:1, PCMEF-US, PCMES-US, PCMEF-ISO, PCMES-ISO
G2	25	I2	AX	114	116	F	1.7	0.3	5.7	Tremolite			
G2	25	I2	AX	115	117	F	4.75	0.8	5.9	Tremolite			
G2	26	J4	AX	116	118	F	4.6	0.55	8.4	Tremolite			
G2	26	J4	AX	117	119	F	4	0.8	5	Tremolite			
G2	26	J4	AX	118	120	F	6	1.2	5	Tremolite			AS>5, 3:1, AFB>5, 3:1, PCMEF-US, PCMES-US, PCMEF-ISO, PCMES-ISO
G2	26	J4	AX	119	121	F	4.2	0.65	6.5	Tremolite			
G2	26	J4	AX	120	122	F	22.5	1	22.5	Tremolite			AS>5, 3:1, AFB>5, 3:1, PCMEF-US, PCMES-US, PCMEF-ISO, PCMES-ISO
G2	27	H4	AX	121	123	F	4.2	0.8	5.2	Tremolite			
G2	27	H4	AX	122	124	F	3.8	0.65	5.8	Tremolite			
G2	27	H4	AX	123	125	F	4.35	0.6	7.2	Tremolite			
G2	27	H4	AX	124	126	F	5.2	1.25	4.2	Tremolite			PCMEF-US, PCMES-US, PCMEF-ISO, PCMES-ISO
G2	28	F4	AX	125	127	F	7	0.6	11.7	Tremolite			AS>5, 3:1, AFB>5, 3:1, PCMEF-US, PCMES-US, PCMEF-ISO, PCMES-ISO
G2	29	D4	AX	126	128	F	7	1.75	4	Tremolite			PCMEF-US, PCMES-US, PCMEF-ISO, PCMES-ISO
G2	29	D4	AX	127	129	F	7.85	1.85	4.2	Tremolite			PCMEF-US, PCMES-US, PCMEF-ISO, PCMES-ISO
G2	29	D4	AX	128	130	F	4.35	1.2	3.6	Tremolite			
G2	29	D4	AX	129	131	F	20	3	6.7	Tremolite			AS>5, 3:1, AFB>5, 3:1, PCMEF-US, PCMES-US, PCMEF-ISO, PCMES-ISO

Count Categories

AFB>5, 3:1	Asbestos Fibers and Bundles > 5um and 3:1	AS>5, 3:1	Asbestos Structures >5um and 3:1
PAS	Primary Asbestos Structures	PCMEF-ISO	PCM Equivalent Fibers-ISO
PCMEF-US	PCM Equivalent Fibers-NIOSH	PCMES-ISO	PCM Equivalent Structures-ISO
PCMES-US	PCM Equivalent Structures-NIOSH	TAS	Total Asbestos Structures

Lab/Cor, Inc.
7619 6th Ave Nw
Seattle, WA 98117

Final Report

Phone: (206) 781-0155
Fax: (206) 789-8424
http://www.labcor.net

A Professional Service Corporation in the Northwest

ISO 10312, Direct Raw Data

Job Number: 070434 **SEA**
Client: Idaho National Laboratory
Project Name: RARE

Report Number: 070434R06
Date Received: 4/23/2007

Client Sample No: **FB-2-R5** Lab/Cor Sample No: **S30**
Client Description: **Date Sampled: 4/16/2007**

Gr	No.	Loc.	ID	Prim	Tot	Class	Len	Wid	Asp	Analyte	Elements	Comment	Count Categories
G2	30	B4	AX	130	132	F	7	0.55	12.7	Tremolite			AS>5, 3:1, AFB>5, 3:1, PCMEF-US, PCMES-US, PCMEF-ISO, PCMES-ISO
G2	30	B4	AX	131	133	F	4.8	1	4.8	Tremolite			
G2	30	B4	AX	132	134	F	3	0.5	6	Tremolite			
G2	30	B4	AX	133	135	F	3.35	0.22	15.2	Tremolite			
G2	31	A7	AX	134	136	F	6	1.8	3.3	Tremolite			PCMEF-US, PCMES-US, PCMEF-ISO, PCMES-ISO
G2	31	A7	AX	135		MD 1-1	12	7	1.7	Tremolite			AS>5, 3:1
G2	31	A7	AX		137	MF	9.5	0.65	14.6	Tremolite			AFB>5, 3:1, PCMEF-US, PCMEF-ISO
G2	31	A7	AX	136	138	F	3.7	0.65	5.7	Tremolite			
G2	31	A7	AX	137	139	F	1.75	0.3	5.8	Tremolite			
G2	31	A7	AX	138	140	F	9	0.8	11.2	Tremolite			AS>5, 3:1, AFB>5, 3:1, PCMEF-US, PCMES-US, PCMEF-ISO, PCMES-ISO
G2	31	A7	AX	139		MD 1-0	4.2	1.5	2.8	Tremolite			
G2	31	A7	AX		141	MF	3.85	0.6	6.4	Tremolite			
G2	31	A7	AX	140	142	F	9.2	1.2	7.7	Tremolite			AS>5, 3:1, AFB>5, 3:1, PCMEF-US, PCMES-US, PCMEF-ISO, PCMES-ISO
G2	32	C7	AX	141	143	F	4.5	1.2	3.7	Tremolite			
G2	32	C7	AX	142	144	F	4	0.65	6.2	Tremolite			
G2	32	C7	AX	143	145	F	11.5	1.5	7.7	Tremolite			AFB>5, 3:1, AS>5, 3:1, PCMEF-US, PCMES-US, PCMEF-ISO, PCMES-ISO
G2	32	C7	AX	144	146	F	4.75	0.6	7.9	Tremolite			
G2	32	C7	AX	145	147	F	3.85	0.7	5.5	Tremolite			
G2	32	C7	AX	146	148	F	5.7	0.3	19	Tremolite			AS>5, 3:1, AFB>5, 3:1, PCMEF-US, PCMES-US, PCMEF-ISO, PCMES-ISO
G2	32	C7	AX	147	149	F	5.5	0.8	6.9	Tremolite			AS>5, 3:1, AFB>5, 3:1, PCMEF-US, PCMES-US, PCMEF-ISO, PCMES-ISO
G2	32	C7	AX	148	150	F	10	2	5	Tremolite			AS>5, 3:1, AFB>5, 3:1, PCMEF-US, PCMES-US, PCMEF-ISO, PCMES-ISO
G2	33	E7	AX	149	151	F	9	0.7	12.9	Tremolite			AS>5, 3:1, AFB>5, 3:1, PCMEF-US, PCMES-US, PCMEF-ISO, PCMES-ISO
G2	33	E7	AX	150	152	F	3.1	0.65	4.8	Tremolite			
G2	33	E7	AX	151	153	F	12	2	6	Tremolite			AS>5, 3:1, AFB>5, 3:1, PCMEF-US, PCMES-US, PCMEF-ISO, PCMES-ISO

Count Categories

AFB>5, 3:1	Asbestos Fibers and Bundles > 5um and 3:1	AS>5, 3:1	Asbestos Structures >5um and 3:1
PAS	Primary Asbestos Structures	PCMEF-ISO	PCM Equivalent Fibers-ISO
PCMEF-US	PCM Equivalent Fibers-NIOSH	PCMES-ISO	PCM Equivalent Structures-ISO
PCMES-US	PCM Equivalent Structures-NIOSH	TAS	Total Asbestos Structures

Lab/Cor, Inc.
7619 6th Ave Nw
Seattle, WA 98117

Final Report

Phone: (206) 781-0155
Fax: (206) 789-8424
http://www.labcor.net

A Professional Service Corporation in the Northwest

ISO 10312, Direct Raw Data

Job Number: 070434 **SEA**
Client: Idaho National Laboratory
Project Name: RARE

Report Number: 070434R06
Date Received: 4/23/2007

Client Sample No: **FB-2-R5** Lab/Cor Sample No: **S30**
Client Description: **Date Sampled: 4/16/2007**

Gr	No.	Loc.	ID	Prim	Tot	Class	Len	Wid	Asp	Analyte	Elements	Comment	Count Categories
G2	33	E7	AX	152	154	F	11.5	0.55	20.9	Tremolite			AS>5, 3:1, AFB>5, 3:1, PCMEF-US, PCMES-US, PCMEF-ISO, PCMES-ISO
G2	33	E7	AX	153	155	F	11.35	1.5	7.6	Tremolite			AS>5, 3:1, AFB>5, 3:1, PCMEF-US, PCMES-US, PCMEF-ISO, PCMES-ISO
G2	33	E7	AX	154	156	F	4.15	0.7	5.9	Tremolite			
G2	34	G7	AX	155	157	F	14.7	1.8	8.2	Tremolite			AS>5, 3:1, AFB>5, 3:1, PCMEF-US, PCMES-US, PCMEF-ISO, PCMES-ISO
G2	34	G7	AX	156	158	F	11	0.7	15.7	Tremolite			AS>5, 3:1, AFB>5, 3:1, PCMEF-US, PCMES-US, PCMES-ISO, PCMEF-ISO
G2	34	G7	AX	157	159	F	4.75	0.5	9.5	Tremolite			
G2	35	I7	AX	158	160	F	8.5	0.22	38.6	Tremolite			AS>5, 3:1, AFB>5, 3:1, PCMEF-ISO, PCMES-ISO
G2	35	I7	AX	159	161	F	5.2	0.75	6.9	Tremolite			AS>5, 3:1, AFB>5, 3:1, PCMEF-US, PCMES-US, PCMEF-ISO, PCMES-ISO
G2	35	I7	AX	160	162	F	9.45	0.38	24.9	Tremolite			AS>5, 3:1, AFB>5, 3:1, PCMEF-US, PCMES-US, PCMEF-ISO, PCMES-ISO

Count Categories

AFB>5, 3:1	Asbestos Fibers and Bundles > 5um and 3:1	AS>5, 3:1	Asbestos Structures >5um and 3:1
PAS	Primary Asbestos Structures	PCMEF-ISO	PCM Equivalent Fibers-ISO
PCMEF-US	PCM Equivalent Fibers-NIOSH	PCMES-ISO	PCM Equivalent Structures-ISO
PCMES-US	PCM Equivalent Structures-NIOSH	TAS	Total Asbestos Structures

Lab/Cor, Inc.
7619 6th Ave Nw
Seattle, WA 98117

Final Report

Phone: (206) 781-0155
Fax: (206) 789-8424
http://www.labcor.net

A Professional Service Corporation in the Northwest

ISO 10312, Direct Raw Data

Job Number: 070434 **SEA**
Client: Idaho National Laboratory
Project Name: RARE

Report Number: 070434R06
Date Received: 4/23/2007

Client Sample No: **FB-2-R6** Lab/Cor Sample No: **S31**
Client Description: **Date Sampled: 4/16/2007**

Gr	No.	Loc.	ID	Prim	Tot	Class	Len	Wid	Asp	Analyte	Elements	Comment	Count Categories
G1	1	A2	AX	1	1	F	1.75	0.38	4.6	Tremolite			
G1	1	A2	AX	2	2	F	2.6	0.3	8.7	Tremolite			
G1	1	A2	AX	3	3	F	3.1	0.75	4.1	Tremolite			
G1	1	A2	AX	4	4	F	5.2	1.1	4.7	Tremolite			PCMEF-US, PCMES-US, PCMEF-ISO, PCMES-ISO
G1	1	A2	AX	5	5	F	1.7	0.65	2.6	Tremolite			
G1	1	A2	AX	6	6	F	11	1.75	6.3	Tremolite			AS>5, 3:1, AFB>5, 3:1, PCMEF-US, PCMES-US, PCMEF-ISO, PCMES-ISO
G1	1	A2	AX	7	7	F	4.5	0.65	6.9	Tremolite			
G1	1	A2	AX	8		MD 1-0	4.35	1.5	2.9	Tremolite			
G1	1	A2	AX		8	MF	4.2	0.3	14	Tremolite			
G1	2	C2	AX	9	9	F	11.65	1.3	9	Tremolite			AS>5, 3:1, AFB>5, 3:1, PCMEF-US, PCMES-US, PCMEF-ISO, PCMES-ISO
G1	2	C2	AX	10		MD 1-1	8.5	4	2.1	Tremolite			AS>5, 3:1
G1	2	C2	AX		10	MF	5.7	0.7	8.1	Tremolite			AFB>5, 3:1, PCMEF-US, PCMEF-ISO
G1	2	C2	AX	11	11	F	1.75	0.38	4.6	Tremolite			
G1	2	C2	AX	12	12	F	55	1.15	47.8	Tremolite			AS>5, 3:1, AFB>5, 3:1, PCMEF-US, PCMES-US, PCMEF-ISO, PCMES-ISO
G1	3	H4	AX	13	13	F	1.75	0.45	3.9	Tremolite			
G1	3	H4	AX	14	14	F	25.38	1.35	18.8	Tremolite			AS>5, 3:1, AFB>5, 3:1, PCMEF-US, PCMES-US, PCMEF-ISO, PCMES-ISO
G1	3	H4	AX	15	15	F	2.22	0.6	3.7	Tremolite			
G1	3	H4	AX	16	16	F	4	0.38	10.5	Tremolite			
G1	3	H4	AX	17		MD 1-0	5.85	4	1.5	Tremolite			AS>5, 3:1
G1	3	H4	AX		17	MF	3.85	1.12	3.4	Tremolite			
G1	4	D7	AX	18	18	F	2	0.5	4	Tremolite			
G1	4	D7	AX	19	19	F	5.75	1.12	5.1	Tremolite			AS>5, 3:1, AFB>5, 3:1, PCMEF-US, PCMES-US, PCMEF-ISO, PCMES-ISO
G1	4	D7	AX	20	20	F	1.85	0.45	4.1	Tremolite			
G1	4	D7	AX	21	21	F	6.35	1.5	4.2	Tremolite			PCMEF-US, PCMES-US, PCMEF-ISO, PCMES-ISO
G1	4	D7	AX	22	22	F	2	0.55	3.6	Tremolite			
G1	5	B5	AX	23	23	F	4	0.3	13.3	Tremolite			
G1	5	B5	AX	24		MD 1-1	12.5	7	1.8	Tremolite			AS>5, 3:1

Count Categories

AFB>5, 3:1	Asbestos Fibers and Bundles > 5um and 3:1	AS>5, 3:1	Asbestos Structures >5um and 3:1
PAS	Primary Asbestos Structures	PCMEF-ISO	PCM Equivalent Fibers-ISO
PCMEF-US	PCM Equivalent Fibers-NIOSH	PCMES-ISO	PCM Equivalent Structures-ISO
PCMES-US	PCM Equivalent Structures-NIOSH	TAS	Total Asbestos Structures

Lab/Cor, Inc.
7619 6th Ave Nw
Seattle, WA 98117

Final Report

Phone: (206) 781-0155
Fax: (206) 789-8424
http://www.labcor.net

A Professional Service Corporation in the Northwest

ISO 10312, Direct Raw Data

Job Number: 070434 **SEA**
Client: Idaho National Laboratory
Project Name: RARE

Report Number: 070434R06
Date Received: 4/23/2007

Client Sample No: **FB-2-R6** Lab/Cor Sample No: **S31**
Client Description: **Date Sampled: 4/16/2007**

Gr	No.	Loc.	ID	Prim	Tot	Class	Len	Wid	Asp	Analyte	Elements	Comment	Count Categories
G1	5	B5	AX		24	MF	11	1.12	9.8	Tremolite			AFB>5, 3:1, PCMEF-US, PCMEF-ISO
G1	5	B5	AX	25	25	F	4.5	0.4	11.2	Tremolite			
G1	5	B5	AX	26	26	F	1.85	0.2	9.2	Tremolite			
G1	5	B5	AX	27	27	F	19.35	1	19.4	Tremolite			AS>5, 3:1, AFB>5, 3:1, PCMEF-US, PCMES-US, PCMEF-ISO, PCMES-ISO
G2	6	D2	AX	28	28	F	4.4	0.65	6.8	Tremolite			
G2	6	D2	AX	29	29	F	4.7	0.8	5.9	Tremolite			
G2	6	D2	AX	30	30	F	1.8	0.3	6	Tremolite			
G2	7	G5	AX	31	31	F	14.2	1	14.2	Tremolite			AS>5, 3:1, AFB>5, 3:1, PCMEF-US, PCMES-US, PCMEF-ISO, PCMES-ISO
G2	7	G5	AX	32	32	F	3.25	0.55	5.9	Tremolite			
G2	7	G5	AX	33	33	F	5	0.85	5.9	Tremolite			
G2	7	G5	AX	34	34	F	3.7	0.85	4.4	Tremolite			
G2	8	B7	AZQ	35		MD 1-0	3	0.85	3.5	Tremolite	Mg, Al, Si, Ca, Fe		

ItemType	ItemNum	Confirmed	Comment
Brightfield	J3582 BF		
Diffraction	J3582	KM 6/6/2007	ZONE AXIS [1 0 1]
Spectra	J3024		

Gr	No.	Loc.	ID	Prim	Tot	Class	Len	Wid	Asp	Analyte	Elements	Comment	Count Categories
G2	8	B7	AZQ		35	MF	2.2	0.2	11	Tremolite			
G2	8	B7	AX	36	36	F	37.5	0.7	53.6	Tremolite			AS>5, 3:1, AFB>5, 3:1, PCMEF-US, PCMES-US, PCMEF-ISO, PCMES-ISO
G2	8	B7	AX	37	37	F	7.7	0.68	11.3	Tremolite			AS>5, 3:1, AFB>5, 3:1, PCMES-US, PCMEF-US, PCMEF-ISO, PCMES-ISO
G2	9	H8	AD	38	38	F	2.7	0.38	7.1	Tremolite		FIBER TILTS INTO GRID BAR	
G2	9	H8	AX	39	39	F	24	1.1	21.8	Tremolite			AS>5, 3:1, AFB>5, 3:1, PCMEF-US, PCMES-US, PCMEF-ISO, PCMES-ISO
G2	9	H8	AX	40	40	F	9.5	0.85	11.2	Tremolite			AS>5, 3:1, AFB>5, 3:1, PCMEF-US, PCMES-US, PCMEF-ISO, PCMES-ISO
G2	9	H8	AX	41	41	F	2.2	0.4	5.5	Tremolite			
G2	9	H8	AX	42	42	F	4	0.75	5.3	Tremolite			
G2	10	E9	AX	43	43	F	4.85	0.68	7.1	Tremolite			

Count Categories

AFB>5, 3:1	Asbestos Fibers and Bundles > 5um and 3:1	AS>5, 3:1	Asbestos Structures >5um and 3:1
PAS	Primary Asbestos Structures	PCMEF-ISO	PCM Equivalent Fibers-ISO
PCMEF-US	PCM Equivalent Fibers-NIOSH	PCMES-ISO	PCM Equivalent Structures-ISO
PCMES-US	PCM Equivalent Structures-NIOSH	TAS	Total Asbestos Structures

Lab/Cor, Inc.
7619 6th Ave Nw
Seattle, WA 98117

Final Report

Phone: (206) 781-0155
Fax: (206) 789-8424
http://www.labcor.net

A Professional Service Corporation in the Northwest

ISO 10312, Direct Raw Data

Job Number: 070434 **SEA**
Client: Idaho National Laboratory
Project Name: RARE

Report Number: 070434R06
Date Received: 4/23/2007

Client Sample No: **FB-2-R6** Lab/Cor Sample No: **S31**
Client Description: **Date Sampled: 4/16/2007**

Gr	No.	Loc.	ID	Prim	Tot	Class	Len	Wid	Asp	Analyte	Elements	Comment	Count Categories
G2	10	E9	AX	44	44	F	5	0.65	7.7	Tremolite			
G2	10	E9	AX	45	45	F	15	1.85	8.1	Tremolite			AS>5, 3:1, AFB>5, 3:1, PCMEF-US, PCMES-US, PCMEF-ISO, PCMES-ISO

Count Categories

AFB>5, 3:1	Asbestos Fibers and Bundles > 5um and 3:1	AS>5, 3:1	Asbestos Structures >5um and 3:1
PAS	Primary Asbestos Structures	PCMEF-ISO	PCM Equivalent Fibers-ISO
PCMEF-US	PCM Equivalent Fibers-NIOSH	PCMES-ISO	PCM Equivalent Structures-ISO
PCMES-US	PCM Equivalent Structures-NIOSH	TAS	Total Asbestos Structures

Lab/Cor, Inc.
7619 6th Ave Nw
Seattle, WA 98117

Final Report

Phone: (206) 781-0155
Fax: (206) 789-8424
http://www.labcor.net

A Professional Service Corporation in the Northwest

ISO 10312, Direct Raw Data

Job Number: 070434 **SEA**
Client: Idaho National Laboratory
Project Name: RARE

Report Number: 070434R06
Date Received: 4/23/2007

Client Sample No: **FB-2-R7** Lab/Cor Sample No: **S32**
Client Description: **Date Sampled: 4/16/2007**

Gr	No.	Loc.	ID	Prim	Tot	Class	Len	Wid	Asp	Analyte	Elements	Comment	Count Categories
G1	1	A4	AX	1	1	F	28	1.8	15.6	Tremolite			AS>5, 3:1, AFB>5, 3:1, PCMEF-US, PCMES-US, PCMEF-ISO, PCMES-ISO
G1	1	A4	AX	2	2	F	1.75	0.4	4.4	Tremolite			
G1	1	A4	AX	3		MD 1-0	3.5	1.5	2.3	Tremolite			
G1	1	A4	AX		3	MF	3.5	0.4	8.8	Tremolite			
G1	1	A4	AX	4	4	F	3.5	1	3.5	Tremolite			
G1	1	A4	AX	5	5	F	2.25	0.35	6.4	Tremolite			
G1	1	A4	AQ	6		MD 1-1	9.5	4.8	2	Tremolite	Mg, Al, Si, Ca, Fe		AS>5, 3:1

ItemType	ItemNum	Confirmed	Comment
Spectra	J3022		

G1	1	A4	AQ		6	MF	5.9	0.58	10.2	Tremolite			AFB>5, 3:1, PCMEF-US, PCMEF-ISO
G1	1	A4	AZQ	7	7	F	13.3	0.75	17.7	Tremolite	Mg, Al, Si, Ca, Fe		AS>5, 3:1, AFB>5, 3:1, PCMEF-US, PCMES-US, PCMEF-ISO, PCMES-ISO

ItemType	ItemNum	Confirmed	Comment
Brightfield	J3581 BF		
Diffraction	J3581	KM 6/6/2007	ZONE AXIS [3 1 2]
Spectra	J3023		

G1	1	A4	AX	8	8	F	19.7	1.75	11.3	Tremolite			AS>5, 3:1, AFB>5, 3:1, PCMEF-US, PCMES-US, PCMEF-ISO, PCMES-ISO
G1	1	A4	AX	9	9	F	11.2	1.2	9.3	Tremolite			AS>5, 3:1, AFB>5, 3:1, PCMEF-US, PCMES-US, PCMEF-ISO, PCMES-ISO
G1	1	A4	AX	10	10	F	3.75	0.38	9.9	Tremolite			
G1	2	D1	AX	11	11	F	1.7	0.35	4.9	Tremolite			
G1	2	D1	AX	12	12	F	5.8	0.8	7.2	Tremolite			AS>5, 3:1, AFB>5, 3:1, PCMEF-US, PCMES-US, PCMEF-ISO, PCMES-ISO
G1	2	D1	AX	13		MD 1-0	5.8	5	1.2	Tremolite			AS>5, 3:1
G1	2	D1	AX		13	MF	4.85	0.38	12.8	Tremolite			
G1	2	D1	AX	14	14	F	3.5	0.7	5	Tremolite			
G1	2	D1	AX	15	15	F	5.25	0.4	13.1	Tremolite			AS>5, 3:1, AFB>5, 3:1, PCMEF-US, PCMES-US, PCMEF-ISO, PCMES-ISO
G1	3	G3	AX	16	16	F	6	1.5	4	Tremolite			PCMEF-US, PCMES-US, PCMES-ISO, PCMEF-ISO
G1	3	G3	AX	17	17	F	2	0.55	3.6	Tremolite			

Count Categories

AFB>5, 3:1	Asbestos Fibers and Bundles > 5um and 3:1	AS>5, 3:1	Asbestos Structures >5um and 3:1
PAS	Primary Asbestos Structures	PCMEF-ISO	PCM Equivalent Fibers-ISO
PCMEF-US	PCM Equivalent Fibers-NIOSH	PCMES-ISO	PCM Equivalent Structures-ISO
PCMES-US	PCM Equivalent Structures-NIOSH	TAS	Total Asbestos Structures

Lab/Cor, Inc.
7619 6th Ave Nw
Seattle, WA 98117

Final Report

Phone: (206) 781-0155
Fax: (206) 789-8424
http://www.labcor.net

A Professional Service Corporation in the Northwest

ISO 10312, Direct Raw Data

Job Number: 070434 **SEA**
Client: Idaho National Laboratory
Project Name: RARE

Report Number: 070434R06
Date Received: 4/23/2007

Client Sample No: **FB-2-R7** Lab/Cor Sample No: **S32**
Client Description: **Date Sampled: 4/16/2007**

Gr	No.	Loc.	ID	Prim	Tot	Class	Len	Wid	Asp	Analyte	Elements	Comment	Count Categories
G1	3	G3	AX	18	18	F	4.5	1.2	3.7	Tremolite			
G1	3	G3	AX	19	19	F	3.2	0.65	4.9	Tremolite			
G1	3	G3	AX	20	20	F	44	1.2	36.7	Tremolite			AS>5, 3:1, AFB>5, 3:1, PCMEF-US, PCMES-US, PCMEF-ISO, PCMES-ISO
G1	3	G3	AX	21	21	F	1.35	0.33	4.1	Tremolite			
G1	3	G3	AX	22	22	F	2.8	0.5	5.6	Tremolite			
G1	3	G3	AX	23	23	F	6	0.4	15	Tremolite			AS>5, 3:1, AFB>5, 3:1, PCMEF-US, PCMES-US, PCMEF-ISO, PCMES-ISO
G1	4	I6	AX	24	24	F	5.5	1.1	5	Tremolite			AS>5, 3:1, AFB>5, 3:1, PCMEF-US, PCMES-US, PCMEF-ISO, PCMES-ISO
G1	4	I6	AX	25	25	F	3.7	0.75	4.9	Tremolite			
G1	4	I6	AX	26	26	F	19	2	9.5	Tremolite			AS>5, 3:1, AFB>5, 3:1, PCMEF-US, PCMES-US, PCMEF-ISO, PCMES-ISO
G1	4	I6	AX	27	27	F	6.2	1.2	5.2	Tremolite			AS>5, 3:1, AFB>5, 3:1, PCMEF-US, PCMES-US, PCMEF-ISO, PCMES-ISO
G1	4	I6	AX	28	28	F	3.7	0.7	5.3	Tremolite			
G1	4	I6	AX	29	29	F	6.5	1.1	5.9	Tremolite			AS>5, 3:1, AFB>5, 3:1, PCMEF-US, PCMES-US, PCMEF-ISO, PCMES-ISO
G1	5	D8	AX	30	30	F	10	0.9	11.1	Tremolite			AS>5, 3:1, AFB>5, 3:1, PCMEF-US, PCMES-US, PCMEF-ISO, PCMES-ISO
G1	5	D8	AX	31	31	F	5.1	0.65	7.8	Tremolite			AS>5, 3:1, AFB>5, 3:1, PCMEF-US, PCMES-US, PCMEF-ISO, PCMES-ISO
G1	5	D8	AX	32	32	F	28	1.8	15.6	Tremolite			AS>5, 3:1, AFB>5, 3:1, PCMEF-US, PCMES-US, PCMEF-ISO, PCMES-ISO
G1	5	D8	AX	33	33	F	5.2	0.65	8	Tremolite			AS>5, 3:1, AFB>5, 3:1, PCMEF-US, PCMES-US, PCMEF-ISO, PCMES-ISO
G1	5	D8	AX	34	34	F	56	4	14	Tremolite			AS>5, 3:1, AFB>5, 3:1, PCMEF-US, PCMES-US
G1	5	D8	AX	35	35	F	3.75	0.33	11.4	Tremolite			
G2	6	D3	AX	36	36	F	2.3	0.3	7.7	Tremolite			
G2	6	D3	AX	37		MD 1-0	11	5	2.2	Tremolite			AS>5, 3:1
G2	6	D3	AX		37	MF	5	0.38	13.2	Tremolite			
G2	6	D3	AX	38	38	F	4	0.45	8.9	Tremolite			

Count Categories

AFB>5, 3:1	Asbestos Fibers and Bundles > 5um and 3:1	AS>5, 3:1	Asbestos Structures >5um and 3:1
PAS	Primary Asbestos Structures	PCMEF-ISO	PCM Equivalent Fibers-ISO
PCMEF-US	PCM Equivalent Fibers-NIOSH	PCMES-ISO	PCM Equivalent Structures-ISO
PCMES-US	PCM Equivalent Structures-NIOSH	TAS	Total Asbestos Structures

Lab/Cor, Inc.
7619 6th Ave Nw
Seattle, WA 98117

Final Report

Phone: (206) 781-0155
Fax: (206) 789-8424
http://www.labcor.net

A Professional Service Corporation in the Northwest

ISO 10312, Direct Raw Data

Job Number: 070434 **SEA**
Client: Idaho National Laboratory
Project Name: RARE

Report Number: 070434R06
Date Received: 4/23/2007

Client Sample No: **FB-2-R7** Lab/Cor Sample No: **S32**
Client Description: **Date Sampled: 4/16/2007**

Gr	No.	Loc.	ID	Prim	Tot	Class	Len	Wid	Asp	Analyte	Elements	Comment	Count Categories
G2	6	D3	AX	39	39	F	17	1.2	14.2	Tremolite			AS>5, 3:1, AFB>5, 3:1, PCMEF-US, PCMES-US, PCMEF-ISO, PCMES-ISO
G2	6	D3	AX	40	40	F	11.2	1.2	9.3	Tremolite			AS>5, 3:1, AFB>5, 3:1, PCMEF-US, PCMES-US, PCMEF-ISO, PCMES-ISO
G2	6	D3	AX	41	41	F	4.2	0.5	8.4	Tremolite			
G2	6	D3	AX	42	42	F	3.3	0.5	6.6	Tremolite			
G2	7	G1	AX	43	43	F	7	0.5	14	Tremolite			AS>5, 3:1, AFB>5, 3:1, PCMEF-US, PCMES-US, PCMES-ISO, PCMEF-ISO
G2	7	G1	AX	44	44	F	8	0.2	40	Tremolite			AS>5, 3:1, AFB>5, 3:1, PCMEF-ISO, PCMES-ISO
G2	7	G1	AX	45	45	F	10.2	1	10.2	Tremolite			AS>5, 3:1, AFB>5, 3:1, PCMEF-US, PCMES-US, PCMEF-ISO, PCMES-ISO
G2	7	G1	AX	46	46	F	2.2	0.4	5.5	Tremolite			
G2	7	G1	AX	47	47	F	11.5	0.85	13.5	Tremolite			AS>5, 3:1, AFB>5, 3:1, PCMEF-US, PCMES-US, PCMEF-ISO, PCMES-ISO
G2	7	G1	AX	48	48	F	14	2.2	6.4	Tremolite			AS>5, 3:1, AFB>5, 3:1, PCMEF-US, PCMES-US, PCMEF-ISO, PCMES-ISO
G2	7	G1	AX	49	49	F	4	0.7	5.7	Tremolite			
G2	7	G1	AX	50	50	F	5.8	0.6	9.7	Tremolite			AS>5, 3:1, AFB>5, 3:1, PCMEF-US, PCMES-US, PCMEF-ISO, PCMES-ISO
G2	8	I3	AX	51		MD 1-1	23.8	10	2.4	Tremolite			AS>5, 3:1
G2	8	I3	AX		51	MF	19.5	0.55	35.5	Tremolite			AFB>5, 3:1, PCMEF-US, PCMEF-ISO
G2	8	I3	AX	52	52	F	4.5	0.9	5	Tremolite			
G2	8	I3	AX	53	53	F	6.2	0.35	17.7	Tremolite			AS>5, 3:1, AFB>5, 3:1, PCMEF-US, PCMES-US, PCMEF-ISO, PCMES-ISO
G2	9	F7	AX	54	54	F	16	0.6	26.7	Tremolite			AS>5, 3:1, AFB>5, 3:1, PCMEF-US, PCMES-US, PCMEF-ISO, PCMES-ISO
G2	9	F7	AX	55	55	F	12	1.2	10	Tremolite			AS>5, 3:1, AFB>5, 3:1, PCMEF-US, PCMES-US, PCMEF-ISO, PCMES-ISO
G2	9	F7	AX	56	56	F	4.35	0.65	6.7	Tremolite			
G2	9	F7	AX	57	57	F	3	0.6	5	Tremolite			
G2	9	F7	AX	58		MD 1-1	20	12	1.7	Tremolite			AS>5, 3:1
G2	9	F7	AX		58	MF	8.75	0.9	9.7	Tremolite			AFB>5, 3:1, PCMEF-US, PCMEF-ISO

Count Categories

AFB>5, 3:1	Asbestos Fibers and Bundles > 5um and 3:1	AS>5, 3:1	Asbestos Structures >5um and 3:1
PAS	Primary Asbestos Structures	PCMEF-ISO	PCM Equivalent Fibers-ISO
PCMEF-US	PCM Equivalent Fibers-NIOSH	PCMES-ISO	PCM Equivalent Structures-ISO
PCMES-US	PCM Equivalent Structures-NIOSH	TAS	Total Asbestos Structures

Lab/Cor, Inc.
7619 6th Ave Nw
Seattle, WA 98117

Final Report

Phone: (206) 781-0155
Fax: (206) 789-8424
http://www.labcor.net

A Professional Service Corporation in the Northwest

ISO 10312, Direct Raw Data

Job Number: 070434 **SEA**
Client: Idaho National Laboratory
Project Name: RARE

Report Number: 070434R06
Date Received: 4/23/2007

Client Sample No: **FB-2-R7** Lab/Cor Sample No: **S32**
Client Description: **Date Sampled: 4/16/2007**

Gr	No.	Loc.	ID	Prim	Tot	Class	Len	Wid	Asp	Analyte	Elements	Comment	Count Categories
G2	9	F7	AX	59	59	F	3.75	0.55	6.8	Tremolite			
G2	9	F7	AX	60	60	F	1.75	0.4	4.4	Tremolite			
G2	10	B9	AX	61	61	F	10.5	0.7	15	Tremolite			AS>5, 3:1, AFB>5, 3:1, PCMEF-US, PCMES-US, PCMEF-ISO, PCMES-ISO
G2	10	B9	AX	62	62	F	7	0.5	14	Tremolite			AS>5, 3:1, AFB>5, 3:1, PCMEF-US, PCMES-US, PCMEF-ISO, PCMES-ISO
G2	10	B9	AX	63	63	F	9	1.2	7.5	Tremolite			AS>5, 3:1, AFB>5, 3:1, PCMEF-US, PCMES-US, PCMEF-ISO, PCMES-ISO
G2	10	B9	AX	64	64	F	12	2.5	4.8	Tremolite			PCMEF-US, PCMES-US, PCMEF-ISO, PCMES-ISO
G2	10	B9	AX	65	65	F	12	1.85	6.5	Tremolite			AFB>5, 3:1, AS>5, 3:1, PCMEF-US, PCMES-US, PCMEF-ISO, PCMES-ISO
G2	10	B9	AX	66	66	F	20	1.85	10.8	Tremolite			AS>5, 3:1, AFB>5, 3:1, PCMEF-US, PCMES-US, PCMEF-ISO, PCMES-ISO
G2	10	B9	AX	67	67	F	3.5	0.55	6.4	Tremolite			
G2	10	B9	AX	68	68	F	15.35	0.7	21.9	Tremolite			AS>5, 3:1, AFB>5, 3:1, PCMEF-US, PCMES-US, PCMEF-ISO, PCMES-ISO

Count Categories

AFB>5, 3:1	Asbestos Fibers and Bundles > 5um and 3:1	AS>5, 3:1	Asbestos Structures >5um and 3:1
PAS	Primary Asbestos Structures	PCMEF-ISO	PCM Equivalent Fibers-ISO
PCMEF-US	PCM Equivalent Fibers-NIOSH	PCMES-ISO	PCM Equivalent Structures-ISO
PCMES-US	PCM Equivalent Structures-NIOSH	TAS	Total Asbestos Structures

Lab/Cor, Inc.
7619 6th Ave Nw
Seattle, WA 98117

Final Report

Phone: (206) 781-0155
Fax: (206) 789-8424
http://www.labcor.net

A Professional Service Corporation in the Northwest

ISO 10312, Direct Raw Data

Job Number: 070434 **SEA**
Client: Idaho National Laboratory
Project Name: RARE

Report Number: 070434R06
Date Received: 4/23/2007

Client Sample No: **FB-1-R1** Lab/Cor Sample No: **S33**
Client Description: **Date Sampled: 4/16/2007**

Gr	No.	Loc.	ID	Prim	Tot	Class	Len	Wid	Asp	Analyte	Elements	Comment	Count Categories
G1	1	B4	AX	1	1	F	6.8	1.15	5.9	Tremolite			AS>5, 3:1, AFB>5, 3:1, PCMEF-US, PCMES-US, PCMEF-ISO, PCMES-ISO
G1	2	D4	AX	2	2	F	4.2	0.5	8.4	Tremolite			
G1	2	D4	AX	3	3	F	7.5	2	3.8	Tremolite			PCMEF-US, PCMES-US, PCMEF-ISO, PCMES-ISO
G1	2	D4	AX	4	4	F	4	0.5	8	Tremolite			
G1	2	D4	AX	5	5	F	4	1.1	3.6	Tremolite			
G1	2	D4	AX	6		MD 1-0	7	7	1	Tremolite			AS>5, 3:1
G1	2	D4	AX		6	MF	4.5	1	4.5	Tremolite			
G1	2	D4	AX	7		CD 2-0	5	2	2.5	Tremolite			
G1	2	D4	AX		7	CF	5	0.75	6.7	Tremolite			
G1	2	D4	AX		8	CF	1.7	0.35	4.9	Tremolite			
G1	3	I5	AX	8	9	F	24.5	0.6	40.8	Tremolite			AS>5, 3:1, AFB>5, 3:1, PCMEF-US, PCMES-US, PCMEF-ISO, PCMES-ISO
G1	3	I5	AX	9	10	F	1.75	0.55	3.2	Tremolite			
G1	4	H8	AX	10	11	F	32.5	0.6	54.2	Tremolite			AS>5, 3:1, AFB>5, 3:1, PCMEF-US, PCMES-US, PCMEF-ISO, PCMES-ISO
G1	4	H8	AX	11	12	F	14	2	7	Tremolite			AS>5, 3:1, AFB>5, 3:1, PCMEF-US, PCMES-US, PCMEF-ISO, PCMES-ISO
G1	4	H8	AZQ	12		MD 3-1	25	6	4.2	Tremolite	Mg, Si, Ca, Fe		AS>5, 3:1, PCMES-US

ItemType	ItemNum	Confirmed	Comment
Brightfield	J3583 BF		
Diffraction	J3583	KM 6/6/2007	ZONE AXIS [2 0 1]
Spectra	J3025		

Gr	No.	Loc.	ID	Prim	Tot	Class	Len	Wid	Asp	Analyte	Elements	Comment	Count Categories
G1	4	H8	AZQ		13	MF	20	1	20	Tremolite			AFB>5, 3:1, PCMEF-US, PCMEF-ISO
G1	4	H8	AZQ		14	MF	4	0.66	6.1	Tremolite			
G1	4	H8	AZQ		15	MF	3.2	0.5	6.4	Tremolite			
G1	4	H8	AX	13		MD 1-1	10	5	2	Tremolite			AS>5, 3:1
G1	4	H8	AX		16	MF	10	0.5	20	Tremolite			AFB>5, 3:1, PCMEF-US, PCMEF-ISO
G1	5	D7	AX	14	17	F	10.8	0.8	13.5	Tremolite			AS>5, 3:1, AFB>5, 3:1, PCMEF-US, PCMES-US, PCMEF-ISO, PCMES-ISO
G1	5	D7	AX	15	18	F	1.5	0.3	5	Tremolite			

Count Categories

AFB>5, 3:1	Asbestos Fibers and Bundles > 5um and 3:1	AS>5, 3:1	Asbestos Structures >5um and 3:1
PAS	Primary Asbestos Structures	PCMEF-ISO	PCM Equivalent Fibers-ISO
PCMEF-US	PCM Equivalent Fibers-NIOSH	PCMES-ISO	PCM Equivalent Structures-ISO
PCMES-US	PCM Equivalent Structures-NIOSH	TAS	Total Asbestos Structures

Lab/Cor, Inc.
7619 6th Ave Nw
Seattle, WA 98117

Final Report

Phone: (206) 781-0155
Fax: (206) 789-8424
http://www.labcor.net

A Professional Service Corporation in the Northwest

ISO 10312, Direct Raw Data

Job Number: 070434 **SEA**
Client: Idaho National Laboratory
Project Name: RARE

Report Number: 070434R06
Date Received: 4/23/2007

Client Sample No: **FB-1-R1** Lab/Cor Sample No: **S33**
Client Description: **Date Sampled: 4/16/2007**

Gr	No.	Loc.	ID	Prim	Tot	Class	Len	Wid	Asp	Analyte	Elements	Comment	Count Categories
G1	5	D7	AX	16	19	F	8.85	0.6	14.8	Tremolite			AS>5, 3:1, AFB>5, 3:1, PCMEF-US, PCMES-US, PCMEF-ISO, PCMES-ISO
G2	6	B3	AX	17	20	F	15	0.7	21.4	Tremolite			AS>5, 3:1, AFB>5, 3:1, PCMEF-US, PCMES-US, PCMEF-ISO, PCMES-ISO
G2	6	B3	AX	18	21	F	7.7	1.2	6.4	Tremolite			AS>5, 3:1, AFB>5, 3:1, PCMEF-US, PCMES-US, PCMEF-ISO, PCMES-ISO
G2	7	E1	AX	19	22	F	5	0.65	7.7	Tremolite			
G2	8	G5	AX	20	23	F	6	0.5	12	Tremolite			AS>5, 3:1, AFB>5, 3:1, PCMEF-US, PCMES-US, PCMEF-ISO, PCMES-ISO
G2	8	G5	AX	21	24	F	13	1.2	10.8	Tremolite			AS>5, 3:1, AFB>5, 3:1, PCMEF-US, PCMES-US, PCMEF-ISO, PCMES-ISO
G2	9	J8	AX	22	25	F	10.1	1.1	9.2	Tremolite			AS>5, 3:1, AFB>5, 3:1, PCMEF-US, PCMES-US, PCMEF-ISO, PCMES-ISO
G2	9	J8	AX	23	26	F	13.5	0.75	18	Tremolite			AS>5, 3:1, AFB>5, 3:1, PCMEF-US, PCMES-US, PCMEF-ISO, PCMES-ISO
G2	10	D8	AX	24	27	F	6.5	0.4	16.2	Tremolite			AS>5, 3:1, AFB>5, 3:1, PCMEF-US, PCMES-US, PCMEF-ISO, PCMES-ISO
G2	10	D8	AX	25		MD 1-1	15	5	3	Tremolite			AS>5, 3:1, PCMES-US
G2	10	D8	AX		28	MF	12.5	1	12.5	Tremolite			AFB>5, 3:1, PCMEF-US, PCMEF-ISO
G2	10	D8	AX	26	29	F	7.5	0.85	8.8	Tremolite			AS>5, 3:1, AFB>5, 3:1, PCMEF-US, PCMES-US, PCMEF-ISO, PCMES-ISO
G2	10	D8	AX	27	30	F	17.75	1.75	10.1	Tremolite			AS>5, 3:1, AFB>5, 3:1, PCMEF-US, PCMES-US, PCMEF-ISO, PCMES-ISO
G2	10	D8	AX	28	31	F	6	0.6	10	Tremolite			AS>5, 3:1, AFB>5, 3:1, PCMEF-US, PCMES-US, PCMEF-ISO, PCMES-ISO

Count Categories

AFB>5, 3:1	Asbestos Fibers and Bundles > 5um and 3:1	AS>5, 3:1	Asbestos Structures >5um and 3:1
PAS	Primary Asbestos Structures	PCMEF-ISO	PCM Equivalent Fibers-ISO
PCMEF-US	PCM Equivalent Fibers-NIOSH	PCMES-ISO	PCM Equivalent Structures-ISO
PCMES-US	PCM Equivalent Structures-NIOSH	TAS	Total Asbestos Structures

Lab/Cor, Inc.
7619 6th Ave Nw
Seattle, WA 98117

Final Report

Phone: (206) 781-0155
Fax: (206) 789-8424
http://www.labcor.net

A Professional Service Corporation in the Northwest

ISO 10312, Direct Raw Data

Job Number: 070434 **SEA**
Client: Idaho National Laboratory
Project Name: RARE

Report Number: 070434R06
Date Received: 4/23/2007

Client Sample No: **FB-1-R2** Lab/Cor Sample No: **S34**
Client Description: **Date Sampled: 4/16/2007**

Gr	No.	Loc.	ID	Prim	Tot	Class	Len	Wid	Asp	Analyte	Elements	Comment	Count Categories
G1	1	A2				NSD							
G1	2	C2				NSD							
G1	3	E2				NSD							
G1	4	G2				NSD							
G1	5	I2				NSD							
G1	6	J4				NSD							
G1	7	H4				NSD							
G1	8	F4				NSD							
G1	9	D4				NSD							
G1	10	B4				NSD							
G1	11	A7				NSD							
G1	12	C7				NSD							
G1	13	E7				NSD							
G1	14	G7				NSD							
G1	15	I7				NSD							
G1	16	J9				NSD							
G1	17	H9				NSD							
G1	18	F9				NSD							
G1	19	D9				NSD							
G1	20	B9				NSD							
G2	21	A2				NSD							
G2	22	C2				NSD							
G2	23	E2				NSD							
G2	24	G2				NSD							
G2	25	I2				NSD							
G2	26	J4				NSD							
G2	27	H4				NSD							
G2	28	F4				NSD							
G2	29	D4				NSD							
G2	30	B4				NSD							
G2	31	A7				NSD							
G2	32	C7				NSD							
G2	33	E7				NSD							
G2	34	G7				NSD							

Count Categories

AFB>5, 3:1	Asbestos Fibers and Bundles > 5um and 3:1	AS>5, 3:1	Asbestos Structures >5um and 3:1
PAS	Primary Asbestos Structures	PCMEF-ISO	PCM Equivalent Fibers-ISO
PCMEF-US	PCM Equivalent Fibers-NIOSH	PCMES-ISO	PCM Equivalent Structures-ISO
PCMES-US	PCM Equivalent Structures-NIOSH	TAS	Total Asbestos Structures

Lab/Cor, Inc.
7619 6th Ave Nw
Seattle, WA 98117

Final Report

Phone: (206) 781-0155
Fax: (206) 789-8424
http://www.labcor.net

A Professional Service Corporation in the Northwest

ISO 10312, Direct Raw Data

Job Number: 070434 **SEA**
Client: Idaho National Laboratory
Project Name: RARE

Report Number: 070434R06
Date Received: 4/23/2007

Client Sample No: **FB-1-R2** Lab/Cor Sample No: **S34**
Client Description: **Date Sampled: 4/16/2007**

Gr	No.	Loc.	ID	Prim	Tot	Class	Len	Wid	Asp	Analyte	Elements	Comment	Count Categories
G2	35	I7				NSD							

Count Categories

AFB>5, 3:1	Asbestos Fibers and Bundles > 5um and 3:1	AS>5, 3:1	Asbestos Structures >5um and 3:1
PAS	Primary Asbestos Structures	PCMEF-ISO	PCM Equivalent Fibers-ISO
PCMEF-US	PCM Equivalent Fibers-NIOSH	PCMES-ISO	PCM Equivalent Structures-ISO
PCMES-US	PCM Equivalent Structures-NIOSH	TAS	Total Asbestos Structures

Lab/Cor, Inc.
7619 6th Ave Nw
Seattle, WA 98117

Final Report

Phone: (206) 781-0155
Fax: (206) 789-8424
http://www.labcor.net

A Professional Service Corporation in the Northwest

ISO 10312, Direct Raw Data

Job Number: 070434 **SEA**
Client: Idaho National Laboratory
Project Name: RARE

Report Number: 070434R06
Date Received: 4/23/2007

Client Sample No: **FB-1-R3** Lab/Cor Sample No: **S35**
Client Description: **Date Sampled: 4/16/2007**

Gr	No.	Loc.	ID	Prim	Tot	Class	Len	Wid	Asp	Analyte	Elements	Comment	Count Categories
G1	1	E1	AZQ	1	1	F	9.8	0.6	16.3	Tremolite	Mg, Al, Si, Ca, Fe		AS>5, 3:1, AFB>5, 3:1, PCMEF-US, PCMES-US, PCMEF-ISO, PCMES-ISO
						ItemType	ItemNum				Confirmed	Comment	
						Brightfield	J3584 BF						
						Diffraction	J3584				KM 6/6/2007	ZONE AXIS [3 1 4]	
						Spectra	J3026						
G1	1	E1	AX	2	2	F	3.85	0.65	5.9	Tremolite			
G1	1	E1	AX	3	3	F	3.8	0.8	4.8	Tremolite			
G1	1	E1	AX	4	4	F	8.8	1.2	7.3	Tremolite			AS>5, 3:1, AFB>5, 3:1, PCMEF-US, PCMES-US, PCMEF-ISO, PCMES-ISO
G1	1	E1	AX	5	5	F	3.2	0.65	4.9	Tremolite			
G1	1	E1	AX	6	6	F	5.5	1.25	4.4	Tremolite			PCMEF-US, PCMES-US, PCMEF-ISO, PCMES-ISO
G1	2	I3	AX	7	7	F	7.25	0.4	18.1	Tremolite			AS>5, 3:1, AFB>5, 3:1, PCMEF-US, PCMES-US, PCMEF-ISO, PCMES-ISO
G1	2	I3	AX	8	8	F	4.9	1.1	4.5	Tremolite			
G1	2	I3	AX	9	9	F	45	0.9	50	Tremolite			AS>5, 3:1, AFB>5, 3:1, PCMEF-US, PCMES-US, PCMEF-ISO, PCMES-ISO
G1	2	I3	AX	10	10	F	2	0.4	5	Tremolite			
G1	3	G6	AX	11	11	F	4.85	0.85	5.7	Tremolite			
G1	3	G6	AX	12	12	F	15.5	1.2	12.9	Tremolite			AS>5, 3:1, AFB>5, 3:1, PCMES-US, PCMEF-US, PCMEF-ISO, PCMES-ISO
G1	4	J8	AX	13	13	F	1.1	0.35	3.1	Tremolite			
G1	4	J8	AX	14	14	F	48	1.85	25.9	Tremolite			AS>5, 3:1, AFB>5, 3:1, PCMEF-US, PCMES-US, PCMEF-ISO, PCMES-ISO
G1	4	J8	AX	15		MD 1-0	2	1.5	1.3	Tremolite			
G1	4	J8	AX		15	MF	1.75	0.5	3.5	Tremolite			
G1	4	J8	AX	16	16	F	12	1.75	6.9	Tremolite			AS>5, 3:1, AFB>5, 3:1, PCMEF-US, PCMES-US, PCMEF-ISO, PCMES-ISO
G1	4	J8	AX	17	17	F	12.5	0.55	22.7	Tremolite			AS>5, 3:1, AFB>5, 3:1, PCMEF-US, PCMES-US, PCMEF-ISO, PCMES-ISO
G1	4	J8	AX	18	18	F	5.8	0.85	6.8	Tremolite			AS>5, 3:1, AFB>5, 3:1, PCMEF-US, PCMES-US, PCMEF-ISO, PCMES-ISO

Count Categories

AFB>5, 3:1	Asbestos Fibers and Bundles > 5um and 3:1	AS>5, 3:1	Asbestos Structures >5um and 3:1
PAS	Primary Asbestos Structures	PCMEF-ISO	PCM Equivalent Fibers-ISO
PCMEF-US	PCM Equivalent Fibers-NIOSH	PCMES-ISO	PCM Equivalent Structures-ISO
PCMES-US	PCM Equivalent Structures-NIOSH	TAS	Total Asbestos Structures

Lab/Cor, Inc.
7619 6th Ave Nw
Seattle, WA 98117

Final Report

Phone: (206) 781-0155
Fax: (206) 789-8424
http://www.labcor.net

A Professional Service Corporation in the Northwest

ISO 10312, Direct Raw Data

Job Number: 070434 **SEA**
Client: Idaho National Laboratory
Project Name: RARE

Report Number: 070434R06
Date Received: 4/23/2007

Client Sample No: **FB-1-R3** Lab/Cor Sample No: **S35**
Client Description: **Date Sampled: 4/16/2007**

Gr	No.	Loc.	ID	Prim	Tot	Class	Len	Wid	Asp	Analyte	Elements	Comment	Count Categories
G1	5	E7	AX	19	19	F	20.5	2	10.2	Tremolite			AS>5, 3:1, AFB>5, 3:1, PCMEF-US, PCMES-US, PCMEF-ISO, PCMES-ISO
G1	5	E7	AX	20	20	F	6.2	0.55	11.3	Tremolite			AS>5, 3:1, AFB>5, 3:1, PCMEF-US, PCMES-US, PCMEF-ISO, PCMES-ISO
G1	5	E7	AX	21	21	F	10.6	1.1	9.6	Tremolite			AS>5, 3:1, AFB>5, 3:1, PCMEF-US, PCMES-US, PCMEF-ISO, PCMES-ISO
G1	5	E7	AX	22	22	F	6.2	0.4	15.5	Tremolite			AS>5, 3:1, AFB>5, 3:1, PCMEF-US, PCMES-US, PCMEF-ISO, PCMES-ISO
G1	5	E7	AX	23	23	F	3.35	1	3.3	Tremolite			
G2	6	B3	AX	24	24	F	2.2	0.7	3.1	Tremolite			
G2	7	F2	AX	25	25	F	35	2.25	15.6	Tremolite			AS>5, 3:1, AFB>5, 3:1, PCMEF-US, PCMES-US, PCMEF-ISO, PCMES-ISO
G2	7	F2	AX	26		MD 1-0	4.8	4.2	1.1	Tremolite			
G2	7	F2	AX		26	MF	3.85	0.4	9.6	Tremolite			
G2	8	G4	AX	27	27	F	4	0.55	7.3	Tremolite			
G2	9	I8	AX	28	28	F	10	1	10	Tremolite			AS>5, 3:1, AFB>5, 3:1, PCMEF-US, PCMES-US, PCMES-ISO, PCMEF-ISO
G2	9	I8	AX	29	29	F	9	0.45	20	Tremolite			AS>5, 3:1, AFB>5, 3:1, PCMEF-US, PCMES-US, PCMEF-ISO, PCMES-ISO
G2	10	D7	AX	30	30	F	8.85	0.8	11.1	Tremolite			AS>5, 3:1, AFB>5, 3:1, PCMEF-US, PCMES-US, PCMEF-ISO, PCMES-ISO
G2	10	D7	AX	31	31	F	10	1.5	6.7	Tremolite			AS>5, 3:1, AFB>5, 3:1, PCMEF-US, PCMES-US, PCMEF-ISO, PCMES-ISO
G2	10	D7	AX	32	32	F	15.5	4.35	3.6	Tremolite			PCMEF-US, PCMES-US

Count Categories

AFB>5, 3:1	Asbestos Fibers and Bundles > 5um and 3:1	AS>5, 3:1	Asbestos Structures >5um and 3:1
PAS	Primary Asbestos Structures	PCMEF-ISO	PCM Equivalent Fibers-ISO
PCMEF-US	PCM Equivalent Fibers-NIOSH	PCMES-ISO	PCM Equivalent Structures-ISO
PCMES-US	PCM Equivalent Structures-NIOSH	TAS	Total Asbestos Structures

Lab/Cor, Inc.
7619 6th Ave Nw
Seattle, WA 98117

Final Report

Phone: (206) 781-0155
Fax: (206) 789-8424
http://www.labcor.net

A Professional Service Corporation in the Northwest

ISO 10312, Direct Raw Data

Job Number: 070434 **SEA**
Client: Idaho National Laboratory
Project Name: RARE

Report Number: 070434R06
Date Received: 4/23/2007

Client Sample No: **FB-1-R4** Lab/Cor Sample No: **S36**
Client Description: **Date Sampled: 4/16/2007**

Gr	No.	Loc.	ID	Prim	Tot	Class	Len	Wid	Asp	Analyte	Elements	Comment	Count Categories
G1	1	B3	AX	1	1	F	7	2	3.5	Tremolite			PCMEF-US, PCMES-US, PCMEF-ISO, PCMES-ISO
G1	1	B3	AX	2	2	F	30	4.5	6.7	Tremolite			AS>5, 3:1, AFB>5, 3:1, PCMEF-US, PCMES-US
G1	1	B3	AZQ	3	3	F	4.5	0.5	9	Tremolite	Mg, Al, Si, Ca, Fe		

ItemType	ItemNum	Confirmed	Comment
Brightfield	J3585 BF		
Diffraction	J3585	KM 6/6/2007	ZONE AXIS [1 0 1]
Spectra	J3027		

Gr	No.	Loc.	ID	Prim	Tot	Class	Len	Wid	Asp	Analyte	Elements	Comment	Count Categories
G1	1	B3	AX	4	4	F	4.9	0.75	6.5	Tremolite			
G1	2	F1	AX	5	5	F	3.2	0.4	8	Tremolite			
G1	2	F1	AX	6	6	F	3.1	0.6	5.2	Tremolite			
G1	2	F1	AX	7	7	F	40	2.1	19	Tremolite			AS>5, 3:1, AFB>5, 3:1, PCMEF-US, PCMES-US, PCMEF-ISO, PCMES-ISO
G1	3	I3	AD	8	8	F	4.85	1.5	3.2	Tremolite			
G1	3	I3	AX	9	9	F	4.85	0.38	12.8	Tremolite			
G1	3	I3	AX	10	10	F	3.2	0.3	10.7	Tremolite			
G1	3	I3	AX	11	11	F	7.25	0.4	18.1	Tremolite			AS>5, 3:1, AFB>5, 3:1, PCMEF-US, PCMES-US, PCMEF-ISO, PCMES-ISO
G1	3	I3	AX	12	12	F	4.8	0.85	5.6	Tremolite			
G1	4	D5	AX	13	13	F	3	0.3	10	Tremolite			
G1	4	D5	AX	14		MD 1-1	10	7	1.4	Tremolite			AS>5, 3:1
G1	4	D5	AX		14	MF	7	0.6	11.7	Tremolite			AFB>5, 3:1, PCMEF-US, PCMEF-ISO
G1	4	D5	AX	15	15	F	10.2	0.9	11.3	Tremolite			AS>5, 3:1, AFB>5, 3:1, PCMEF-US, PCMES-US, PCMEF-ISO, PCMES-ISO
G1	5	F9	AX	16	16	F	7	0.5	14	Tremolite			AS>5, 3:1, AFB>5, 3:1, PCMEF-US, PCMES-US, PCMEF-ISO, PCMES-ISO
G1	5	F9	AX	17	17	F	27.5	2.2	12.5	Tremolite			AS>5, 3:1, AFB>5, 3:1, PCMEF-US, PCMES-US, PCMEF-ISO, PCMES-ISO
G2	6	D1	AX	18	18	F	5.2	0.65	8	Tremolite			AS>5, 3:1, AFB>5, 3:1, PCMEF-US, PCMES-US, PCMEF-ISO, PCMES-ISO
G2	6	D1	AX	19		MD 1-0	4.2	1.8	2.3	Tremolite			
G2	6	D1	AX		19	MF	4.2	0.5	8.4	Tremolite			
G2	6	D1	AX	20	20	F	2.5	0.5	5	Tremolite			

Count Categories

AFB>5, 3:1	Asbestos Fibers and Bundles > 5um and 3:1	AS>5, 3:1	Asbestos Structures >5um and 3:1
PAS	Primary Asbestos Structures	PCMEF-ISO	PCM Equivalent Fibers-ISO
PCMEF-US	PCM Equivalent Fibers-NIOSH	PCMES-ISO	PCM Equivalent Structures-ISO
PCMES-US	PCM Equivalent Structures-NIOSH	TAS	Total Asbestos Structures

Lab/Cor, Inc.
7619 6th Ave Nw
Seattle, WA 98117

Final Report

Phone: (206) 781-0155
Fax: (206) 789-8424
http://www.labcor.net

A Professional Service Corporation in the Northwest

ISO 10312, Direct Raw Data

Job Number: 070434 **SEA**
Client: Idaho National Laboratory
Project Name: RARE

Report Number: 070434R06
Date Received: 4/23/2007

Client Sample No: **FB-1-R4** Lab/Cor Sample No: **S36**
Client Description: **Date Sampled: 4/16/2007**

Gr	No.	Loc.	ID	Prim	Tot	Class	Len	Wid	Asp	Analyte	Elements	Comment	Count Categories
G2	7	I4	AX	21	21	F	15.75	2.8	5.6	Tremolite			AS>5, 3:1, AFB>5, 3:1, PCMEF-US, PCMES-US, PCMEF-ISO, PCMES-ISO
G2	7	I4	AX	22	22	F	4.85	1.15	4.2	Tremolite			
G2	7	I4	AX	23	23	F	17	0.5	34	Tremolite			AS>5, 3:1, AFB>5, 3:1, PCMEF-US, PCMES-US, PCMEF-ISO, PCMES-ISO
G2	7	I4	AX	24	24	F	4.5	0.5	9	Tremolite			
G2	7	I4	AX	25	25	F	5.7	1.5	3.8	Tremolite			PCMEF-US, PCMES-US, PCMEF-ISO, PCMES-ISO
G2	8	G6	AX	26		MD 1-1	11.5	3.5	3.3	Tremolite			AS>5, 3:1, PCMES-US
G2	8	G6	AX		26	MF	7.2	1	7.2	Tremolite			AFB>5, 3:1, PCMEF-US, PCMEF-ISO
G2	8	G6	AX	27		MD 1-1	13	10	1.3	Tremolite			AS>5, 3:1
G2	8	G6	AX		27	MF	5.4	0.4	13.5	Tremolite			AFB>5, 3:1, PCMEF-US, PCMEF-ISO
G2	9	H9	AX	28	28	F	2.6	0.8	3.2	Tremolite			
G2	9	H9	AX	29	29	F	10.1	1.8	5.6	Tremolite			AS>5, 3:1, AFB>5, 3:1, PCMEF-US, PCMES-US, PCMEF-ISO, PCMES-ISO
G2	10	C7	AX	30	30	F	21.5	1.8	11.9	Tremolite			AS>5, 3:1, AFB>5, 3:1, PCMEF-US, PCMES-US, PCMEF-ISO, PCMES-ISO
G2	10	C7	AX	31	31	F	3.35	0.6	5.6	Tremolite			
G2	10	C7	AX	32	32	F	4.6	0.75	6.1	Tremolite			
G2	10	C7	AX	33	33	F	30	5	6	Tremolite			AS>5, 3:1, AFB>5, 3:1, PCMEF-US, PCMES-US

Count Categories

AFB>5, 3:1	Asbestos Fibers and Bundles > 5um and 3:1	AS>5, 3:1	Asbestos Structures >5um and 3:1
PAS	Primary Asbestos Structures	PCMEF-ISO	PCM Equivalent Fibers-ISO
PCMEF-US	PCM Equivalent Fibers-NIOSH	PCMES-ISO	PCM Equivalent Structures-ISO
PCMES-US	PCM Equivalent Structures-NIOSH	TAS	Total Asbestos Structures

Lab/Cor, Inc.
7619 6th Ave Nw
Seattle, WA 98117

Final Report

Phone: (206) 781-0155
Fax: (206) 789-8424
http://www.labcor.net

A Professional Service Corporation in the Northwest

ISO 10312, Direct Raw Data

Job Number: 070434 **SEA**
Client: Idaho National Laboratory
Project Name: RARE

Report Number: 070434R06
Date Received: 4/23/2007

Client Sample No: **FB-1-R5** Lab/Cor Sample No: **S37**
Client Description: **Date Sampled: 4/16/2007**

Gr	No.	Loc.	ID	Prim	Tot	Class	Len	Wid	Asp	Analyte	Elements	Comment	Count Categories
G1	1	B2	AX	1	1	F	4.5	0.3	15	Tremolite			
G1	1	B2	AX	2	2	F	5.1	0.5	10.2	Tremolite			AS>5, 3:1, AFB>5, 3:1, PCMEF-US, PCMES-US, PCMEF-ISO, PCMES-ISO
G1	1	B2	AX	3	3	F	4.8	0.35	13.7	Tremolite			
G1	2	F1	AX	4	4	F	20.3	1	20.3	Tremolite			AS>5, 3:1, AFB>5, 3:1, PCMEF-US, PCMES-US, PCMEF-ISO, PCMES-ISO
G1	2	F1	AX	5	5	F	4.8	0.85	5.6	Tremolite			
G1	3	I3	AQ	6	6	F	10	1.5	6.7	Tremolite	Mg, Si, Ca, Fe		AS>5, 3:1, AFB>5, 3:1, PCMEF-US, PCMES-US, PCMEF-ISO, PCMES-ISO

ItemType	ItemNum	Confirmed	Comment
Spectra	J3028		

Gr	No.	Loc.	ID	Prim	Tot	Class	Len	Wid	Asp	Analyte	Elements	Comment	Count Categories
G1	4	G5	AX	7		MD 1-1	9	5	1.8	Tremolite			AS>5, 3:1
G1	4	G5	AX		7	MF	8	1.25	6.4	Tremolite			AFB>5, 3:1, PCMEF-US, PCMEF-ISO
G1	4	G5	AX	8	8	F	4.5	0.65	6.9	Tremolite			
G1	4	G5	AX	9		MD 1-1	44	10	4.4	Tremolite			AS>5, 3:1, PCMES-US
G1	4	G5	AX		9	MF	44	0.7	62.9	Tremolite			AFB>5, 3:1, PCMEF-US, PCMEF-ISO
G1	5	F10	AZQ	10	10	F	14.5	0.45	32.2	Tremolite	Mg, Si, Ca, Fe		AS>5, 3:1, AFB>5, 3:1, PCMEF-US, PCMES-US, PCMEF-ISO, PCMES-ISO

ItemType	ItemNum	Confirmed	Comment
Brightfield	J3586 BF		
Diffraction	J3586	KM 6/7/2007	ZONE AXIS [3 1 4]
Spectra	J3029		

Gr	No.	Loc.	ID	Prim	Tot	Class	Len	Wid	Asp	Analyte	Elements	Comment	Count Categories
G1	5	F10	AX	11	11	F	5	0.3	16.7	Tremolite			
G2	6	B5	AX	12	12	F	5.8	1	5.8	Tremolite			AS>5, 3:1, AFB>5, 3:1, PCMEF-US, PCMES-US, PCMEF-ISO, PCMES-ISO
G2	6	B5	AX	13	13	F	7.65	0.6	12.8	Tremolite			AS>5, 3:1, AFB>5, 3:1, PCMEF-US, PCMES-US, PCMEF-ISO, PCMES-ISO
G2	6	B5	AX	14	14	F	20	2.85	7	Tremolite			AS>5, 3:1, AFB>5, 3:1, PCMEF-US, PCMES-US, PCMEF-ISO, PCMES-ISO
G2	7	E2	AX	15	15	F	5.7	1	5.7	Tremolite			AS>5, 3:1, AFB>5, 3:1, PCMEF-US, PCMES-US, PCMEF-ISO, PCMES-ISO
G2	7	E2	AX	16	16	F	3.1	0.85	3.6	Tremolite			
G2	7	E2	AX	17	17	F	3.12	0.4	7.8	Tremolite			

Count Categories

AFB>5, 3:1	Asbestos Fibers and Bundles > 5um and 3:1	AS>5, 3:1	Asbestos Structures >5um and 3:1
PAS	Primary Asbestos Structures	PCMEF-ISO	PCM Equivalent Fibers-ISO
PCMEF-US	PCM Equivalent Fibers-NIOSH	PCMES-ISO	PCM Equivalent Structures-ISO
PCMES-US	PCM Equivalent Structures-NIOSH	TAS	Total Asbestos Structures

Lab/Cor, Inc.
7619 6th Ave Nw
Seattle, WA 98117

Final Report

Phone: (206) 781-0155
Fax: (206) 789-8424
http://www.labcor.net

A Professional Service Corporation in the Northwest

ISO 10312, Direct Raw Data

Job Number: 070434 **SEA**
Client: Idaho National Laboratory
Project Name: RARE

Report Number: 070434R06
Date Received: 4/23/2007

Client Sample No: **FB-1-R5** Lab/Cor Sample No: **S37**
Client Description: **Date Sampled: 4/16/2007**

Gr	No.	Loc.	ID	Prim	Tot	Class	Len	Wid	Asp	Analyte	Elements	Comment	Count Categories
G2	7	E2	AX	18	18	F	4.9	0.25	19.6	Tremolite			
G2	8	H4	AX	19	19	F	1.2	0.2	6	Tremolite			
G2	8	H4	AX	20	20	F	4.2	1.2	3.5	Tremolite			
G2	8	H4	AX	21	21	F	42	1	42	Tremolite			AS>5, 3:1, AFB>5, 3:1, PCMEF-US, PCMES-US, PCMEF-ISO, PCMES-ISO
G2	9	J8	AX	22	22	F	1.1	0.3	3.7	Tremolite			
G2	9	J8	AX	23	23	F	4.5	0.8	5.6	Tremolite			
G2	10	D8	AX	24		MD 1-1	13	3	4.3	Tremolite			AS>5, 3:1, PCMES-US, PCMES-ISO
G2	10	D8	AX		24	MF	10.12	0.6	16.9	Tremolite			AFB>5, 3:1, PCMEF-US, PCMEF-ISO
G2	10	D8	AX	25	25	F	12.5	0.45	27.8	Tremolite			AS>5, 3:1, AFB>5, 3:1, PCMEF-US, PCMES-US, PCMEF-ISO, PCMES-ISO
G2	10	D8	AX	26	26	F	3.2	0.7	4.6	Tremolite			

Count Categories

AFB>5, 3:1	Asbestos Fibers and Bundles > 5um and 3:1	AS>5, 3:1	Asbestos Structures >5um and 3:1
PAS	Primary Asbestos Structures	PCMEF-ISO	PCM Equivalent Fibers-ISO
PCMEF-US	PCM Equivalent Fibers-NIOSH	PCMES-ISO	PCM Equivalent Structures-ISO
PCMES-US	PCM Equivalent Structures-NIOSH	TAS	Total Asbestos Structures

Lab/Cor, Inc.
7619 6th Ave Nw
Seattle, WA 98117

Final Report

Phone: (206) 781-0155
Fax: (206) 789-8424
http://www.labcor.net

A Professional Service Corporation in the Northwest

ISO 10312, Direct Raw Data

Job Number: 070434 **SEA**
Client: Idaho National Laboratory
Project Name: RARE

Report Number: 070434R06
Date Received: 4/23/2007

Client Sample No: **FB-1-R6** Lab/Cor Sample No: **S38**
Client Description: **Date Sampled: 4/16/2007**

Gr	No.	Loc.	ID	Prim	Tot	Class	Len	Wid	Asp	Analyte	Elements	Comment	Count Categories
G1	1	B2	AQ	1	1	F	4.25	0.7	6.1	Tremolite	Mg, Si, Ca, Fe		
						ItemType	ItemNum				Confirmed	Comment	
						Spectra	J3030						
G1	1	B2	AX	2	2	F	4	0.4	10	Tremolite			
G1	2	F3	AX	3	3	F	9.3	0.7	13.3	Tremolite			AS>5, 3:1, AFB>5, 3:1, PCMEF-US, PCMES-US, PCMEF-ISO, PCMES-ISO
G1	2	F3	AX	4	4	F	1.65	0.45	3.7	Tremolite			
G1	2	F3	AX	5		MD 1-0	5.1	1.5	3.4	Tremolite			AS>5, 3:1, PCMES-US, PCMES-ISO
G1	2	F3	AX		5	MF	4.25	0.75	5.7	Tremolite			
G1	3	I5	AX	6	6	F	24	0.9	26.7	Tremolite			AS>5, 3:1, AFB>5, 3:1, PCMEF-US, PCMES-US, PCMEF-ISO, PCMES-ISO
G1	3	I5	AX	7	7	F	1.75	0.45	3.9	Tremolite			
G1	3	I5	AX	8	8	F	6.2	0.5	12.4	Tremolite			AS>5, 3:1, AFB>5, 3:1, PCMEF-US, PCMES-US, PCMEF-ISO, PCMES-ISO
G1	4	G10	AX	9	9	F	13	0.55	23.6	Tremolite			AS>5, 3:1, AFB>5, 3:1, PCMEF-US, PCMES-US, PCMEF-ISO, PCMES-ISO
G1	4	G10	AX	10	10	F	6.2	1.75	3.5	Tremolite			PCMEF-US, PCMES-US, PCMEF-ISO, PCMES-ISO
G1	4	G10	AX	11	11	F	9.85	1.3	7.6	Tremolite			AS>5, 3:1, AFB>5, 3:1, PCMEF-US, PCMES-US, PCMEF-ISO, PCMES-ISO
G1	5	D8	AZQ	12	12	F	5	1	5	Tremolite	Mg, Al, Si, Ca, Fe		
						ItemType	ItemNum				Confirmed	Comment	
						Brightfield	J3587 BF						
						Diffraction	J3587				KM 6/7/2007	ZONE AXIS [3 1 2]	
						Spectra	J3031						
G1	5	D8	AX	13	13	F	4.15	1.15	3.6	Tremolite			
G1	5	D8	AX	14	14	F	26	0.5	52	Tremolite			AS>5, 3:1, AFB>5, 3:1, PCMEF-US, PCMES-US, PCMEF-ISO, PCMES-ISO
G2	6	A4	AX	15	15	F	10.35	0.7	14.8	Tremolite			AS>5, 3:1, AFB>5, 3:1, PCMEF-US, PCMES-US, PCMEF-ISO, PCMES-ISO
G2	7	D3	AX	16	16	F	1.2	0.4	3	Tremolite			

Count Categories

AFB>5, 3:1	Asbestos Fibers and Bundles > 5um and 3:1	AS>5, 3:1	Asbestos Structures >5um and 3:1
PAS	Primary Asbestos Structures	PCMEF-ISO	PCM Equivalent Fibers-ISO
PCMEF-US	PCM Equivalent Fibers-NIOSH	PCMES-ISO	PCM Equivalent Structures-ISO
PCMES-US	PCM Equivalent Structures-NIOSH	TAS	Total Asbestos Structures

Lab/Cor, Inc.
7619 6th Ave Nw
Seattle, WA 98117

Final Report

Phone: (206) 781-0155
Fax: (206) 789-8424
http://www.labcor.net

A Professional Service Corporation in the Northwest

ISO 10312, Direct Raw Data

Job Number: 070434 **SEA**
Client: Idaho National Laboratory
Project Name: RARE

Report Number: 070434R06
Date Received: 4/23/2007

Client Sample No: **FB-1-R6** Lab/Cor Sample No: **S38**
Client Description: **Date Sampled: 4/16/2007**

Gr	No.	Loc.	ID	Prim	Tot	Class	Len	Wid	Asp	Analyte	Elements	Comment	Count Categories
G2	7	D3	AX	17	17	F	7.5	0.8	9.4	Tremolite			AS>5, 3:1, AFB>5, 3:1, PCMEF-US, PCMES-US, PCMEF-ISO, PCMES-ISO
G2	7	D3	AX	18	18	F	1.35	0.3	4.5	Tremolite			
G2	8	I4	AX	19		MD 1-0	10	5	2	Tremolite			AS>5, 3:1
G2	8	I4	AX		19	MF	2	0.35	5.7	Tremolite			
G2	8	I4	AX	20	20	F	5.65	0.75	7.5	Tremolite			AS>5, 3:1, AFB>5, 3:1, PCMEF-US, PCMES-US, PCMEF-ISO, PCMES-ISO
G2	8	I4	AX	21	21	F	9	0.7	12.9	Tremolite			AS>5, 3:1, AFB>5, 3:1, PCMEF-US, PCMES-US, PCMEF-ISO, PCMES-ISO
G2	9	G7	AX	22	22	F	5.15	0.6	8.6	Tremolite			AS>5, 3:1, AFB>5, 3:1, PCMEF-US, PCMES-US, PCMEF-ISO, PCMES-ISO
G2	9	G7	AX	23	23	F	12.5	0.4	31.2	Tremolite			AS>5, 3:1, AFB>5, 3:1, PCMEF-US, PCMES-US, PCMEF-ISO, PCMES-ISO
G2	9	G7	AX	24	24	F	8	0.85	9.4	Tremolite			AS>5, 3:1, AFB>5, 3:1, PCMEF-US, PCMES-US, PCMEF-ISO, PCMES-ISO
G2	10	D7	AX	25	25	F	24	0.4	60	Tremolite			AFB>5, 3:1, AS>5, 3:1, PCMEF-US, PCMES-US, PCMEF-ISO, PCMES-ISO

Count Categories

AFB>5, 3:1	Asbestos Fibers and Bundles > 5um and 3:1	AS>5, 3:1	Asbestos Structures >5um and 3:1
PAS	Primary Asbestos Structures	PCMEF-ISO	PCM Equivalent Fibers-ISO
PCMEF-US	PCM Equivalent Fibers-NIOSH	PCMES-ISO	PCM Equivalent Structures-ISO
PCMES-US	PCM Equivalent Structures-NIOSH	TAS	Total Asbestos Structures

Lab/Cor, Inc.
7619 6th Ave Nw
Seattle, WA 98117

Final Report

Phone: (206) 781-0155
Fax: (206) 789-8424
http://www.labcor.net

A Professional Service Corporation in the Northwest

ISO 10312, Direct Raw Data

Job Number: 070434 **SEA**
Client: Idaho National Laboratory
Project Name: RARE

Report Number: 070434R06
Date Received: 4/23/2007

Client Sample No: **FB-1-R7** Lab/Cor Sample No: **S39**
Client Description: **Date Sampled: 4/16/2007**

Gr	No.	Loc.	ID	Prim	Tot	Class	Len	Wid	Asp	Analyte	Elements	Comment	Count Categories
G1	1	C2	AZQ	1	1	F	4	0.38	10.5	Tremolite	Mg, Al, Si, Ca, Fe		
						ItemType	ItemNum				Confirmed	Comment	
						Brightfield	J3588 BF						
						Diffraction	J3588				KM 6/7/2007	ZONE AXIS [3 1 0]	
						Spectra	J3032						
G1	1	C2	AX	2	2	F	12	1.35	8.9	Tremolite			AS>5, 3:1, AFB>5, 3:1, PCMEF-US, PCMES-US, PCMEF-ISO, PCMES-ISO
G1	1	C2	AX	3	3	F	3.15	0.3	10.5	Tremolite			
G1	2	F1	AX	4	4	F	5.6	0.4	14	Tremolite			AS>5, 3:1, AFB>5, 3:1, PCMEF-US, PCMES-US, PCMEF-ISO, PCMES-ISO
G1	2	F1	AX	5	5	F	9	1.25	7.2	Tremolite			AS>5, 3:1, AFB>5, 3:1, PCMEF-US, PCMES-US, PCMEF-ISO, PCMES-ISO
G1	3	I3	AX	6		MD 2-1	15	12	1.2	Tremolite			AS>5, 3:1
G1	3	I3	AX		6	MF	5.2	0.38	13.7	Tremolite			AFB>5, 3:1, PCMEF-US, PCMEF-ISO
G1	3	I3	AX		7	MF	2.3	0.4	5.8	Tremolite			
G1	3	I3	AX	7		MD 1-1	20	10	2	Tremolite			AS>5, 3:1
G1	3	I3	AX		8	MF	18.5	0.85	21.8	Tremolite			AFB>5, 3:1, PCMEF-US, PCMEF-ISO
G1	4	G7	AX	8	9	F	2.35	0.25	9.4	Tremolite			
G1	4	G7	AX	9	10	F	10.15	1.2	8.5	Tremolite			AS>5, 3:1, AFB>5, 3:1, PCMEF-US, PCMES-US, PCMEF-ISO, PCMES-ISO
G1	4	G7	AX	10	11	F	5.35	0.9	5.9	Tremolite			AS>5, 3:1, AFB>5, 3:1, PCMEF-US, PCMES-US, PCMEF-ISO, PCMES-ISO
G1	5	D6				NSD							
G2	6	A4	AX	11	12	F	14.5	0.78	18.6	Tremolite			AS>5, 3:1, AFB>5, 3:1, PCMES-US, PCMEF-US, PCMEF-ISO, PCMES-ISO
G2	6	A4	AX	12	13	F	3.1	0.8	3.9	Tremolite			
G2	6	A4	AX	13		MD 1-0	7	4	1.8	Tremolite			AS>5, 3:1
G2	6	A4	AX		14	MF	4.2	0.5	8.4	Tremolite			
G2	7	C1	AX	14	15	F	11	0.5	22	Tremolite			AS>5, 3:1, AFB>5, 3:1, PCMEF-US, PCMES-US, PCMEF-ISO, PCMES-ISO
G2	7	C1	AX	15	16	F	1.75	0.4	4.4	Tremolite			

Count Categories

AFB>5, 3:1	Asbestos Fibers and Bundles > 5um and 3:1	AS>5, 3:1	Asbestos Structures >5um and 3:1
PAS	Primary Asbestos Structures	PCMEF-ISO	PCM Equivalent Fibers-ISO
PCMEF-US	PCM Equivalent Fibers-NIOSH	PCMES-ISO	PCM Equivalent Structures-ISO
PCMES-US	PCM Equivalent Structures-NIOSH	TAS	Total Asbestos Structures

Lab/Cor, Inc.
7619 6th Ave Nw
Seattle, WA 98117

Final Report

Phone: (206) 781-0155
Fax: (206) 789-8424
http://www.labcor.net

A Professional Service Corporation in the Northwest

ISO 10312, Direct Raw Data

Job Number: 070434 **SEA**
Client: Idaho National Laboratory
Project Name: RARE

Report Number: 070434R06
Date Received: 4/23/2007

Client Sample No: **FB-1-R7** Lab/Cor Sample No: **S39**
Client Description: **Date Sampled: 4/16/2007**

Gr	No.	Loc.	ID	Prim	Tot	Class	Len	Wid	Asp	Analyte	Elements	Comment	Count Categories
G2	7	C1	AX	16	17	F	8.58	0.88	9.8	Tremolite			AS>5, 3:1, AFB>5, 3:1, PCMEF-US, PCMES-US, PCMEF-ISO, PCMES-ISO
G2	8	G2	AX	17	18	F	5	0.6	8.3	Tremolite			
G2	8	G2	AX	18	19	F	6.2	1.75	3.5	Tremolite			PCMEF-US, PCMES-US, PCMEF-ISO, PCMES-ISO
G2	8	G2	AX	19	20	F	6.2	1.75	3.5	Tremolite			PCMEF-US, PCMES-US, PCMEF-ISO, PCMES-ISO
G2	8	G2	AX	20	21	F	7.7	0.8	9.6	Tremolite			AS>5, 3:1, AFB>5, 3:1, PCMEF-US, PCMES-US, PCMEF-ISO, PCMES-ISO
G2	8	G2	AX	21	22	F	4.25	0.8	5.3	Tremolite			
G2	9	J5	AX	22	23	F	2.4	0.3	8	Tremolite			
G2	9	J5	AX	23		MD 1-0	2.75	1.1	2.5	Tremolite			
G2	9	J5	AX		24	MF	2.35	0.25	9.4	Tremolite			
G2	10	F10	AX	24	25	F	2.5	0.65	3.8	Tremolite			
G2	10	F10	AX	25	26	F	8.2	2	4.1	Tremolite			PCMEF-US, PCMES-US, PCMEF-ISO, PCMES-ISO
G2	10	F10	AX	26	27	F	7.5	0.65	11.5	Tremolite			AS>5, 3:1, AFB>5, 3:1, PCMEF-US, PCMES-US, PCMEF-ISO, PCMES-ISO

Count Categories

AFB>5, 3:1	Asbestos Fibers and Bundles > 5um and 3:1	AS>5, 3:1	Asbestos Structures >5um and 3:1
PAS	Primary Asbestos Structures	PCMEF-ISO	PCM Equivalent Fibers-ISO
PCMEF-US	PCM Equivalent Fibers-NIOSH	PCMES-ISO	PCM Equivalent Structures-ISO
PCMES-US	PCM Equivalent Structures-NIOSH	TAS	Total Asbestos Structures

Lab/Cor, Inc.
7619 6th Ave Nw
Seattle, WA 98117

Final Report

Phone: (206) 781-0155
Fax: (206) 789-8424
http://www.labcor.net

A Professional Service Corporation in the Northwest

ISO 10312, Direct Raw Data

Job Number: 070434 **SEA**
Client: Idaho National Laboratory
Project Name: RARE

Report Number: 070434R06
Date Received: 4/23/2007

Reviewed by:

Count Categories

AFB>5, 3:1	Asbestos Fibers and Bundles > 5um and 3:1	AS>5, 3:1	Asbestos Structures >5um and 3:1
PAS	Primary Asbestos Structures	PCMEF-ISO	PCM Equivalent Fibers-ISO
PCMEF-US	PCM Equivalent Fibers-NIOSH	PCMES-ISO	PCM Equivalent Structures-ISO
PCMES-US	PCM Equivalent Structures-NIOSH	TAS	Total Asbestos Structures

Lab/Cor, Inc.
7619 6th Ave Nw
Seattle, WA 98117

Phone: (206) 781-0155
Fax: (206) 789-8424
http://www.labcor.net

A Professional Service Corporation in the Northwest

ISO 10312, Direct Count Categories

Job Number: 070434 **SEA**
Client: Idaho National Laboratory
Project Name: RARE

Report Number: 070434R06
Date Received: 4/23/2007

Lab/Cor Sample No.: S3
Client Sample No.: cleaning blank #3
Description:
Filter Fraction: 1
Residual Ash Vol:

Aliquot Dilution: 0
Final Dilution: 0

Volume (L): 0
Lab Filter Area (mm2): 385
Grid Openings Analyzed: 35
Average Grid Opening Area: 0.009
Area Analyzed (mm2): 0.315
Analytical Sens. (struc/cc): 0
Dectection Limit. (struc/cc): 0

Structure Type	Filter Density (s/mm2)	Concen-tration (struc/cc)	95% Confidence Interval (struc/cc)	Structure Count[1] Prim/Total
PCM Equivalent Fibers-ISO		Not Applicable	Not Applicable	1

Gr	No.	Loc.	ID	Prim	Tot	Class	Len	Wid	Asp	Analyte	Elements	Comment
G1	2	C2	AZQ	1	1	F	7.7	1.5	5.1	Tremolite	MG,AL,SI,CA,FE	

Structure Type	Filter Density (s/mm2)	Concen-tration (struc/cc)	95% Confidence Interval (struc/cc)	Structure Count[1] Prim/Total
PCM Equivalent Structures-ISO	3.2	Not Applicable	Not Applicable	1

Gr	No.	Loc.	ID	Prim	Tot	Class	Len	Wid	Asp	Analyte	Elements	Comment
G1	2	C2	AZQ	1	1	F	7.7	1.5	5.1	Tremolite	MG,AL,SI,CA,FE	

Structure Type	Filter Density (s/mm2)	Concen-tration (struc/cc)	95% Confidence Interval (struc/cc)	Structure Count[1] Prim/Total
PCM Equivalent Fibers-NIOSH		Not Applicable	Not Applicable	1

Gr	No.	Loc.	ID	Prim	Tot	Class	Len	Wid	Asp	Analyte	Elements	Comment
G1	2	C2	AZQ	1	1	F	7.7	1.5	5.1	Tremolite	MG,AL,SI,CA,FE	

Structure Type	Filter Density (s/mm2)	Concen-tration (struc/cc)	95% Confidence Interval (struc/cc)	Structure Count[1] Prim/Total
PCM Equivalent Structures-NIOSH	3.2	Not Applicable	Not Applicable	1

Gr	No.	Loc.	ID	Prim	Tot	Class	Len	Wid	Asp	Analyte	Elements	Comment
G1	2	C2	AZQ	1	1	F	7.7	1.5	5.1	Tremolite	MG,AL,SI,CA,FE	

Structure Type	Filter Density (s/mm2)	Concen-tration (struc/cc)	95% Confidence Interval (struc/cc)	Structure Count[1] Prim/Total
Asbestos Structures >5um and 3:1	3.2	Not Applicable	Not Applicable	1

Gr	No.	Loc.	ID	Prim	Tot	Class	Len	Wid	Asp	Analyte	Elements	Comment
G1	2	C2	AZQ	1	1	F	7.7	1.5	5.1	Tremolite	MG,AL,SI,CA,FE	

Structure Type	Filter Density (s/mm2)	Concen-tration (struc/cc)	95% Confidence Interval (struc/cc)	Structure Count[1] Prim/Total
Asbestos Fibers and Bundles > 5um and 3:1		Not Applicable	Not Applicable	1

Gr	No.	Loc.	ID	Prim	Tot	Class	Len	Wid	Asp	Analyte	Elements	Comment
G1	2	C2	AZQ	1	1	F	7.7	1.5	5.1	Tremolite	MG,AL,SI,CA,FE	

Lab/Cor, Inc.
7619 6th Ave Nw
Seattle, WA 98117

Phone: (206) 781-0155
Fax: (206) 789-8424
http://www.labcor.net

A Professional Service Corporation in the Northwest

ISO 10312, Direct Count Categories

Job Number: 070434 **SEA** **Report Number:** 070434R06
Client: Idaho National Laboratory **Date Received:** 4/23/2007
Project Name: RARE

Lab/Cor Sample No.: S10
Client Sample No.: cleaning protocol 2
Description:
Filter Fraction: 1 **Aliquot Dilution:** 0
Residual Ash Vol: **Final Dilution:** 0

Volume (L): 0
Lab Filter Area (mm2): 385
Grid Openings Analyzed: 35
Average Grid Opening Area: 0.009
Area Analyzed (mm2): 0.315
Analytical Sens. (struc/cc): 0
Dectection Limit. (struc/cc): 0

Structure Type	Filter Density (s/mm2)	Concen-tration (struc/cc)	95% Confidence Interval (struc/cc)	Structure Count[1] Prim/Total
PCM Equivalent Fibers-ISO		Not Applicable	Not Applicable	2

Gr	No.	Loc.	ID	Prim	Tot	Class	Len	Wid	Asp	Analyte	Elements	Comment
G1	1	A2	AZQ	1	1	F	5.5	1.1	5	Tremolite	MG,SI,CA,FE	
G2	21	A2	ADQ		2	MF	5.2	0.53	9.8	Tremolite		

Structure Type	Filter Density (s/mm2)	Concen-tration (struc/cc)	95% Confidence Interval (struc/cc)	Structure Count[1] Prim/Total
PCM Equivalent Structures-ISO	3.2	Not Applicable	Not Applicable	1

Gr	No.	Loc.	ID	Prim	Tot	Class	Len	Wid	Asp	Analyte	Elements	Comment
G1	1	A2	AZQ	1	1	F	5.5	1.1	5	Tremolite	MG,SI,CA,FE	

Structure Type	Filter Density (s/mm2)	Concen-tration (struc/cc)	95% Confidence Interval (struc/cc)	Structure Count[1] Prim/Total
PCM Equivalent Fibers-NIOSH		Not Applicable	Not Applicable	2

Gr	No.	Loc.	ID	Prim	Tot	Class	Len	Wid	Asp	Analyte	Elements	Comment
G1	1	A2	AZQ	1	1	F	5.5	1.1	5	Tremolite	MG,SI,CA,FE	
G2	21	A2	ADQ		2	MF	5.2	0.53	9.8	Tremolite		

Structure Type	Filter Density (s/mm2)	Concen-tration (struc/cc)	95% Confidence Interval (struc/cc)	Structure Count[1] Prim/Total
PCM Equivalent Structures-NIOSH	3.2	Not Applicable	Not Applicable	1

Gr	No.	Loc.	ID	Prim	Tot	Class	Len	Wid	Asp	Analyte	Elements	Comment
G1	1	A2	AZQ	1	1	F	5.5	1.1	5	Tremolite	MG,SI,CA,FE	

Structure Type	Filter Density (s/mm2)	Concen-tration (struc/cc)	95% Confidence Interval (struc/cc)	Structure Count[1] Prim/Total
Asbestos Structures >5um and 3:1	6.3	Not Applicable	Not Applicable	2

Gr	No.	Loc.	ID	Prim	Tot	Class	Len	Wid	Asp	Analyte	Elements	Comment
G1	1	A2	AZQ	1	1	F	5.5	1.1	5	Tremolite	MG,SI,CA,FE	
G2	21	A2	ADQ	2		MD 1-1	8	6	1.3	Tremolite	MG,SI,CA,FE	

Structure Type	Filter Density (s/mm2)	Concen-tration (struc/cc)	95% Confidence Interval (struc/cc)	Structure Count[1] Prim/Total
Asbestos Fibers and Bundles > 5um and 3:1		Not Applicable	Not Applicable	2

Gr	No.	Loc.	ID	Prim	Tot	Class	Len	Wid	Asp	Analyte	Elements	Comment
G1	1	A2	AZQ	1	1	F	5.5	1.1	5	Tremolite	MG,SI,CA,FE	
G2	21	A2	ADQ		2	MF	5.2	0.53	9.8	Tremolite		

Lab/Cor, Inc.
7619 6th Ave Nw
Seattle, WA 98117

Phone: (206) 781-0155
Fax: (206) 789-8424
http://www.labcor.net

A Professional Service Corporation in the Northwest

ISO 10312, Direct Count Categories

Job Number: 070434 **SEA** **Report Number:** 070434R06
Client: Idaho National Laboratory **Date Received:** 4/23/2007
Project Name: RARE

Lab/Cor Sample No.: S12
Client Sample No.: FB-4-R1
Description:
Filter Fraction: 1 **Aliquot Dilution:** 0
Residual Ash Vol: **Final Dilution:** 0

Volume (L): 0
Lab Filter Area (mm2): 385
Grid Openings Analyzed: 35
Average Grid Opening Area: 0.009
Area Analyzed (mm2): 0.315
Analytical Sens. (struc/cc): 0
Dectection Limit. (struc/cc): 0

Structure Type	Filter Density (s/mm2)	Concen-tration (struc/cc)	95% Confidence Interval (struc/cc)	Structure Count[1] Prim/Total
PCM Equivalent Fibers-ISO		Not Applicable	Not Applicable	5

Gr	No.	Loc.	ID	Prim	Tot	Class	Len	Wid	Asp	Analyte	Elements	Comment
G1	2	G4	AZQ	2	2	B	11.2	1.25	9	Tremolite		
G1	12	H7	ADQ	8	11	F	16.75	0.8	20.9	Tremolite	Mg, Si, Ca, Fe	
G1	1	E4	AZQ		1	MF	20	0.75	26.7	Tremolite		
G2	24	I2	CMQ	11	15	B	5.5	0.45	12.2	Chrysotile	Mg, Si	
G2	26	H4	ADQ		16	MF	10	1.5	6.7	Tremolite		

PCM Equivalent Structures-ISO	9.5	Not Applicable	Not Applicable	3	

Gr	No.	Loc.	ID	Prim	Tot	Class	Len	Wid	Asp	Analyte	Elements	Comment
G1	2	G4	AZQ	2	2	B	11.2	1.25	9	Tremolite		
G1	12	H7	ADQ	8	11	F	16.75	0.8	20.9	Tremolite	Mg, Si, Ca, Fe	
G2	24	I2	CMQ	11	15	B	5.5	0.45	12.2	Chrysotile	Mg, Si	

PCM Equivalent Fibers-NIOSH		Not Applicable	Not Applicable		5

Gr	No.	Loc.	ID	Prim	Tot	Class	Len	Wid	Asp	Analyte	Elements	Comment
G1	1	E4	AZQ		1	MF	20	0.75	26.7	Tremolite		
G1	12	H7	ADQ	8	11	F	16.75	0.8	20.9	Tremolite	Mg, Si, Ca, Fe	
G1	2	G4	AZQ	2	2	B	11.2	1.25	9	Tremolite		
G2	24	I2	CMQ	11	15	B	5.5	0.45	12.2	Chrysotile	Mg, Si	
G2	26	H4	ADQ		16	MF	10	1.5	6.7	Tremolite		

PCM Equivalent Structures-NIOSH	12.7	Not Applicable	Not Applicable	4	

Gr	No.	Loc.	ID	Prim	Tot	Class	Len	Wid	Asp	Analyte	Elements	Comment
G1	2	G4	AZQ	2	2	B	11.2	1.25	9	Tremolite		
G1	12	H7	ADQ	8	11	F	16.75	0.8	20.9	Tremolite	Mg, Si, Ca, Fe	
G2	24	I2	CMQ	11	15	B	5.5	0.45	12.2	Chrysotile	Mg, Si	
G2	26	H4	ADQ	12		MD 1-1	16.5	4	4.1	Tremolite	Mg, Si, Ca, Fe	

Asbestos Structures >5um and 3:1	19.0	Not Applicable	Not Applicable	6	

Gr	No.	Loc.	ID	Prim	Tot	Class	Len	Wid	Asp	Analyte	Elements	Comment
G1	2	G4	AZQ	2	2	B	11.2	1.25	9	Tremolite		
G1	12	H7	ADQ	8	11	F	16.75	0.8	20.9	Tremolite	Mg, Si, Ca, Fe	
G1	1	E4	AZQ	1		MD 1-1	20.5	9	2.3	Tremolite	Mg, Si, Ca, Fe	
G2	26	H4	ADQ	12		MD 1-1	16.5	4	4.1	Tremolite	Mg, Si, Ca, Fe	
G2	28	A4	AMQ	14		MD 1-0	9	5.5	1.6	Tremolite	Mg, Si, Ca, Fe	
G2	24	I2	CMQ	11	15	B	5.5	0.45	12.2	Chrysotile	Mg, Si	

Asbestos Fibers and Bundles > 5um and 3:1		Not Applicable	Not Applicable		6

Gr	No.	Loc.	ID	Prim	Tot	Class	Len	Wid	Asp	Analyte	Elements	Comment
G1	1	E4	AZQ		1	MF	20	0.75	26.7	Tremolite		

Lab/Cor, Inc.
7619 6th Ave Nw
Seattle, WA 98117

Phone: (206) 781-0155
Fax: (206) 789-8424
http://www.labcor.net

A Professional Service Corporation in the Northwest

ISO 10312, Direct Count Categories

Job Number: 070434 **SEA**
Client: Idaho National Laboratory
Project Name: RARE

Report Number: 070434R06
Date Received: 4/23/2007

Lab/Cor Sample No.: S12
Client Sample No.: FB-4-R1
Description:
Filter Fraction: 1
Residual Ash Vol:

Aliquot Dilution: 0
Final Dilution: 0

Volume (L): 0
Lab Filter Area (mm2): 385
Grid Openings Analyzed: 35
Average Grid Opening Area: 0.009
Area Analyzed (mm2): 0.315
Analytical Sens. (struc/cc): 0
Dectection Limit. (struc/cc): 0

Structure Type	Filter Density (s/mm2)	Concen-tration (struc/cc)	95% Confidence Interval (struc/cc)	Structure Count[1] Prim/Total
Asbestos Fibers and Bundles > 5um and 3:1		Not Applicable	Not Applicable	6

Gr	No.	Loc.	ID	Prim	Tot	Class	Len	Wid	Asp	Analyte	Elements	Comment
G1	2	G4	AZQ	2	2	B	11.2	1.25	9	Tremolite		
G1	8	E2	CDQ		5	CF	8	0.1	80	Chrysotile		
G1	12	H7	ADQ	8	11	F	16.75	0.8	20.9	Tremolite	Mg, Si, Ca, Fe	
G2	26	H4	ADQ		16	MF	10	1.5	6.7	Tremolite		
G2	24	I2	CMQ	11	15	B	5.5	0.45	12.2	Chrysotile	Mg, Si	

Lab/Cor, Inc.
7619 6th Ave Nw
Seattle, WA 98117

Phone: (206) 781-0155
Fax: (206) 789-8424
http://www.labcor.net

A Professional Service Corporation in the Northwest

ISO 10312, Direct Count Categories

Job Number: 070434 **SEA** **Report Number:** 070434R06
Client: Idaho National Laboratory **Date Received:** 4/23/2007
Project Name: RARE

Lab/Cor Sample No.: S13
Client Sample No.: FB-4-R2
Description:
Filter Fraction: 1 **Aliquot Dilution:** 0
Residual Ash Vol: **Final Dilution:** 0

Volume (L): 0
Lab Filter Area (mm2): 385
Grid Openings Analyzed: 35
Average Grid Opening Area: 0.009
Area Analyzed (mm2): 0.315
Analytical Sens. (struc/cc): 0
Dectection Limit. (struc/cc): 0

Structure Type	Filter Density (s/mm2)	Concen-tration (struc/cc)	95% Confidence Interval (struc/cc)	Structure Count[1] Prim/Total
PCM Equivalent Fibers-ISO		Not Applicable	Not Applicable	4

Gr	No.	Loc.	ID	Prim	Tot	Class	Len	Wid	Asp	Analyte	Elements	Comment
G1	14	G7	ADQ	4	4	F	10	0.85	11.8	Tremolite	Mg, Al, Si, Ca, Mn, Fe	
G1	7	H4	ADQ	2	2	F	7.5	0.95	7.9	Tremolite	Mg, Si, Ca, Fe	
G2	28	F4	AZQ	8	8	F	23.75	1.2	19.8	Tremolite	Mg, Si, Ca, Fe	
G2	34	I7	AQ	11	11	F	6	1.25	4.8	Tremolite	Mg, Si , Ca, Fe	

PCM Equivalent Structures-ISO	12.7	Not Applicable	Not Applicable	4

Gr	No.	Loc.	ID	Prim	Tot	Class	Len	Wid	Asp	Analyte	Elements	Comment
G1	7	H4	ADQ	2	2	F	7.5	0.95	7.9	Tremolite	Mg, Si, Ca, Fe	
G1	14	G7	ADQ	4	4	F	10	0.85	11.8	Tremolite	Mg, Al, Si, Ca, Mn, Fe	
G2	28	F4	AZQ	8	8	F	23.75	1.2	19.8	Tremolite	Mg, Si, Ca, Fe	
G2	34	I7	AQ	11	11	F	6	1.25	4.8	Tremolite	Mg, Si , Ca, Fe	

PCM Equivalent Fibers-NIOSH		Not Applicable	Not Applicable	4

Gr	No.	Loc.	ID	Prim	Tot	Class	Len	Wid	Asp	Analyte	Elements	Comment
G1	14	G7	ADQ	4	4	F	10	0.85	11.8	Tremolite	Mg, Al, Si, Ca, Mn, Fe	
G1	7	H4	ADQ	2	2	F	7.5	0.95	7.9	Tremolite	Mg, Si, Ca, Fe	
G2	28	F4	AZQ	8	8	F	23.75	1.2	19.8	Tremolite	Mg, Si, Ca, Fe	
G2	34	I7	AQ	11	11	F	6	1.25	4.8	Tremolite	Mg, Si , Ca, Fe	

PCM Equivalent Structures-NIOSH	12.7	Not Applicable	Not Applicable	4

Gr	No.	Loc.	ID	Prim	Tot	Class	Len	Wid	Asp	Analyte	Elements	Comment
G1	7	H4	ADQ	2	2	F	7.5	0.95	7.9	Tremolite	Mg, Si, Ca, Fe	
G1	14	G7	ADQ	4	4	F	10	0.85	11.8	Tremolite	Mg, Al, Si, Ca, Mn, Fe	
G2	28	F4	AZQ	8	8	F	23.75	1.2	19.8	Tremolite	Mg, Si, Ca, Fe	
G2	34	I7	AQ	11	11	F	6	1.25	4.8	Tremolite	Mg, Si , Ca, Fe	

Asbestos Structures >5um and 3:1	9.5	Not Applicable	Not Applicable	3

Gr	No.	Loc.	ID	Prim	Tot	Class	Len	Wid	Asp	Analyte	Elements	Comment
G1	7	H4	ADQ	2	2	F	7.5	0.95	7.9	Tremolite	Mg, Si, Ca, Fe	
G1	14	G7	ADQ	4	4	F	10	0.85	11.8	Tremolite	Mg, Al, Si, Ca, Mn, Fe	
G2	28	F4	AZQ	8	8	F	23.75	1.2	19.8	Tremolite	Mg, Si, Ca, Fe	

Asbestos Fibers and Bundles > 5um and 3:1		Not Applicable	Not Applicable	3

Gr	No.	Loc.	ID	Prim	Tot	Class	Len	Wid	Asp	Analyte	Elements	Comment
G1	7	H4	ADQ	2	2	F	7.5	0.95	7.9	Tremolite	Mg, Si, Ca, Fe	

Lab/Cor, Inc.
7619 6th Ave Nw
Seattle, WA 98117

Phone: (206) 781-0155
Fax: (206) 789-8424
http://www.labcor.net

A Professional Service Corporation in the Northwest

ISO 10312, Direct Count Categories

Job Number: 070434 **SEA**
Client: Idaho National Laboratory
Project Name: RARE

Report Number: 070434R06
Date Received: 4/23/2007

Lab/Cor Sample No.: S13
Client Sample No.: FB-4-R2
Description:
Filter Fraction: 1
Residual Ash Vol:

Aliquot Dilution: 0
Final Dilution: 0

Volume (L): 0
Lab Filter Area (mm2): 385
Grid Openings Analyzed: 35
Average Grid Opening Area: 0.009
Area Analyzed (mm2): 0.315
Analytical Sens. (struc/cc): 0
Dectection Limit. (struc/cc): 0

Structure Type	Filter Density (s/mm2)	Concen-tration (struc/cc)	95% Confidence Interval (struc/cc)	Structure Count[1] Prim/Total	
Asbestos Fibers and Bundles > 5um and 3:1		Not Applicable	Not Applicable		3

Gr	No.	Loc.	ID	Prim	Tot	Class	Len	Wid	Asp	Analyte	Elements	Comment
G1	14	G7	ADQ	4	4	F	10	0.85	11.8	Tremolite	Mg, Al, Si, Ca, Mn, Fe	
G2	28	F4	AZQ	8	8	F	23.75	1.2	19.8	Tremolite	Mg, Si, Ca, Fe	

Lab/Cor, Inc.
7619 6th Ave Nw
Seattle, WA 98117

Phone: (206) 781-0155
Fax: (206) 789-8424
http://www.labcor.net

A Professional Service Corporation in the Northwest

ISO 10312, Direct Count Categories

Job Number: 070434 **SEA** **Report Number:** 070434R06
Client: Idaho National Laboratory **Date Received:** 4/23/2007
Project Name: RARE

Lab/Cor Sample No.: S14
Client Sample No.: FB-4-R3
Description:
Filter Fraction: 1 **Aliquot Dilution:** 0
Residual Ash Vol: **Final Dilution:** 0

Volume (L): 0
Lab Filter Area (mm2): 385
Grid Openings Analyzed: 35
Average Grid Opening Area: 0.009
Area Analyzed (mm2): 0.315
Analytical Sens. (struc/cc): 0
Dectection Limit. (struc/cc): 0

Structure Type	Filter Density (s/mm2)	Concen-tration (struc/cc)	95% Confidence Interval (struc/cc)	Structure Count[1] Prim/Total
PCM Equivalent Fibers-ISO		Not Applicable	Not Applicable	5

Gr	No.	Loc.	ID	Prim	Tot	Class	Len	Wid	Asp	Analyte	Elements	Comment
G1	3	E2	AZQ	2	2	F	7.4	0.75	9.9	Tremolite	Mg, Al, Si, Ca, Fe	
G1	9	D4	ADQ	4	4	F	11	1	11	Tremolite	Mg, Si, Ca, Fe	
G1	17	H9	ADQ		7	MF	6.2	1.35	4.6	Tremolite		
G1	17	H9	ADQ	6	6	F	30	2.5	12	Tremolite	Mg, Si, Ca, Fe	
G2	33	E7	ADQ		12	MF	5.85	0.9	6.5	Tremolite		

PCM Equivalent Structures-ISO	9.5	Not Applicable	Not Applicable	3	

Gr	No.	Loc.	ID	Prim	Tot	Class	Len	Wid	Asp	Analyte	Elements	Comment
G1	17	H9	ADQ	6	6	F	30	2.5	12	Tremolite	Mg, Si, Ca, Fe	
G1	3	E2	AZQ	2	2	F	7.4	0.75	9.9	Tremolite	Mg, Al, Si, Ca, Fe	
G1	9	D4	ADQ	4	4	F	11	1	11	Tremolite	Mg, Si, Ca, Fe	

PCM Equivalent Fibers-NIOSH		Not Applicable	Not Applicable		5

Gr	No.	Loc.	ID	Prim	Tot	Class	Len	Wid	Asp	Analyte	Elements	Comment
G1	17	H9	ADQ	6	6	F	30	2.5	12	Tremolite	Mg, Si, Ca, Fe	
G1	17	H9	ADQ		7	MF	6.2	1.35	4.6	Tremolite		
G1	3	E2	AZQ	2	2	F	7.4	0.75	9.9	Tremolite	Mg, Al, Si, Ca, Fe	
G1	9	D4	ADQ	4	4	F	11	1	11	Tremolite	Mg, Si, Ca, Fe	
G2	33	E7	ADQ		12	MF	5.85	0.9	6.5	Tremolite		

PCM Equivalent Structures-NIOSH	9.5	Not Applicable	Not Applicable	3	

Gr	No.	Loc.	ID	Prim	Tot	Class	Len	Wid	Asp	Analyte	Elements	Comment
G1	3	E2	AZQ	2	2	F	7.4	0.75	9.9	Tremolite	Mg, Al, Si, Ca, Fe	
G1	9	D4	ADQ	4	4	F	11	1	11	Tremolite	Mg, Si, Ca, Fe	
G1	17	H9	ADQ	6	6	F	30	2.5	12	Tremolite	Mg, Si, Ca, Fe	

Asbestos Structures >5um and 3:1	15.9	Not Applicable	Not Applicable	5	

Gr	No.	Loc.	ID	Prim	Tot	Class	Len	Wid	Asp	Analyte	Elements	Comment
G1	17	H9	ADQ	6	6	F	30	2.5	12	Tremolite	Mg, Si, Ca, Fe	
G1	17	H9	ADQ	7		MD 1-1	20	9	2.2	Tremolite	Mg, Si, Ca, Fe	
G1	3	E2	AZQ	2	2	F	7.4	0.75	9.9	Tremolite	Mg, Al, Si, Ca, Fe	
G1	9	D4	ADQ	4	4	F	11	1	11	Tremolite	Mg, Si, Ca, Fe	
G2	33	E7	ADQ	12		MD 1-1	8.5	7.5	1.1	Tremolite	Mg, Si, Ca, Fe	

Asbestos Fibers and Bundles > 5um and 3:1		Not Applicable	Not Applicable		4

Gr	No.	Loc.	ID	Prim	Tot	Class	Len	Wid	Asp	Analyte	Elements	Comment
G1	3	E2	AZQ	2	2	F	7.4	0.75	9.9	Tremolite	Mg, Al, Si, Ca, Fe	
G1	9	D4	ADQ	4	4	F	11	1	11	Tremolite	Mg, Si, Ca, Fe	
G1	17	H9	ADQ	6	6	F	30	2.5	12	Tremolite	Mg, Si, Ca, Fe	

Lab/Cor, Inc.
7619 6th Ave Nw
Seattle, WA 98117

Phone: (206) 781-0155
Fax: (206) 789-8424
http://www.labcor.net

A Professional Service Corporation in the Northwest

ISO 10312, Direct Count Categories

Job Number: 070434 **SEA**
Client: Idaho National Laboratory
Project Name: RARE

Report Number: 070434R06
Date Received: 4/23/2007

Lab/Cor Sample No.: S14
Client Sample No.: FB-4-R3
Description:
Filter Fraction: 1
Residual Ash Vol:

Aliquot Dilution: 0
Final Dilution: 0

Volume (L): 0
Lab Filter Area (mm2): 385
Grid Openings Analyzed: 35
Average Grid Opening Area: 0.009
Area Analyzed (mm2): 0.315
Analytical Sens. (struc/cc): 0
Dectection Limit. (struc/cc): 0

Structure Type	Filter Density (s/mm2)	Concen-tration (struc/cc)	95% Confidence Interval (struc/cc)	Structure Count[1] Prim/Total
Asbestos Fibers and Bundles > 5um and 3:1		Not Applicable	Not Applicable	4

Gr	No.	Loc.	ID	Prim	Tot	Class	Len	Wid	Asp	Analyte	Elements	Comment
G2	33	E7	ADQ		12	MF	5.85	0.9	6.5	Tremolite		

Lab/Cor, Inc.
7619 6th Ave Nw
Seattle, WA 98117

Phone: (206) 781-0155
Fax: (206) 789-8424
http://www.labcor.net

A Professional Service Corporation in the Northwest

ISO 10312, Direct Count Categories

Job Number: 070434 **SEA**
Report Number: 070434R06
Client: Idaho National Laboratory
Date Received: 4/23/2007
Project Name: RARE

Lab/Cor Sample No.: S15
Client Sample No.: FB-4-R4
Description:
Filter Fraction: 1
Residual Ash Vol:
Aliquot Dilution: 0
Final Dilution: 0
Volume (L): 0
Lab Filter Area (mm2): 385
Grid Openings Analyzed: 35
Average Grid Opening Area: 0.009
Area Analyzed (mm2): 0.315
Analytical Sens. (struc/cc): 0
Dectection Limit. (struc/cc): 0

Structure Type	Filter Density (s/mm2)	Concen-tration (struc/cc)	95% Confidence Interval (struc/cc)	Structure Count[1] Prim/Total
PCM Equivalent Fibers-ISO		Not Applicable	Not Applicable	1

Gr	No.	Loc.	ID	Prim	Tot	Class	Len	Wid	Asp	Analyte	Elements	Comment
G2	21	A2	ADQ	4	4	F	15	1	15	Tremolite	Mg, Si, Ca, Fe	

Structure Type	Filter Density (s/mm2)	Concen-tration (struc/cc)	95% Confidence Interval (struc/cc)	Structure Count[1] Prim/Total
PCM Equivalent Structures-ISO	3.2	Not Applicable	Not Applicable	1

Gr	No.	Loc.	ID	Prim	Tot	Class	Len	Wid	Asp	Analyte	Elements	Comment
G2	21	A2	ADQ	4	4	F	15	1	15	Tremolite	Mg, Si, Ca, Fe	

Structure Type	Filter Density (s/mm2)	Concen-tration (struc/cc)	95% Confidence Interval (struc/cc)	Structure Count[1] Prim/Total
PCM Equivalent Fibers-NIOSH		Not Applicable	Not Applicable	1

Gr	No.	Loc.	ID	Prim	Tot	Class	Len	Wid	Asp	Analyte	Elements	Comment
G2	21	A2	ADQ	4	4	F	15	1	15	Tremolite	Mg, Si, Ca, Fe	

Structure Type	Filter Density (s/mm2)	Concen-tration (struc/cc)	95% Confidence Interval (struc/cc)	Structure Count[1] Prim/Total
PCM Equivalent Structures-NIOSH	3.2	Not Applicable	Not Applicable	1

Gr	No.	Loc.	ID	Prim	Tot	Class	Len	Wid	Asp	Analyte	Elements	Comment
G2	21	A2	ADQ	4	4	F	15	1	15	Tremolite	Mg, Si, Ca, Fe	

Structure Type	Filter Density (s/mm2)	Concen-tration (struc/cc)	95% Confidence Interval (struc/cc)	Structure Count[1] Prim/Total
Asbestos Structures >5um and 3:1	6.3	Not Applicable	Not Applicable	2

Gr	No.	Loc.	ID	Prim	Tot	Class	Len	Wid	Asp	Analyte	Elements	Comment
G1	9	D4	AZQ	1		MD 1-0	5.7	3.8	1.5	Tremolite	Mg, Si, K, Ca, Fe	
G2	21	A2	ADQ	4	4	F	15	1	15	Tremolite	Mg, Si, Ca, Fe	

Structure Type	Filter Density (s/mm2)	Concen-tration (struc/cc)	95% Confidence Interval (struc/cc)	Structure Count[1] Prim/Total
Asbestos Fibers and Bundles > 5um and 3:1		Not Applicable	Not Applicable	1

Gr	No.	Loc.	ID	Prim	Tot	Class	Len	Wid	Asp	Analyte	Elements	Comment
G2	21	A2	ADQ	4	4	F	15	1	15	Tremolite	Mg, Si, Ca, Fe	

Lab/Cor, Inc.
7619 6th Ave Nw
Seattle, WA 98117

Phone: (206) 781-0155
Fax: (206) 789-8424
http://www.labcor.net

A Professional Service Corporation in the Northwest

ISO 10312, Direct Count Categories

Job Number: 070434 **SEA** **Report Number:** 070434R06
Client: Idaho National Laboratory **Date Received:** 4/23/2007
Project Name: RARE

Lab/Cor Sample No.: S16
Client Sample No.: FB-4-R5
Description:
Filter Fraction: 1 **Aliquot Dilution:** 0
Residual Ash Vol: **Final Dilution:** 0

Volume (L): 0
Lab Filter Area (mm2): 385
Grid Openings Analyzed: 35
Average Grid Opening Area: 0.009
Area Analyzed (mm2): 0.315
Analytical Sens. (struc/cc): 0
Dectection Limit. (struc/cc): 0

Structure Type	Filter Density (s/mm2)	Concen-tration (struc/cc)	95% Confidence Interval (struc/cc)	Structure Count[1] Prim/Total
PCM Equivalent Fibers-ISO		Not Applicable	Not Applicable	3

Gr	No.	Loc.	ID	Prim	Tot	Class	Len	Wid	Asp	Analyte	Elements	Comment
G1	5	I2	AZQ		1	MF	6.7	1.25	5.4	Tremolite		
G1	9	D4	ADQ	2	2	F	17	1.35	12.6	Tremolite	Mg, Si, Ca, Fe	
G2	23	E2	ADQ	3	3	B	7	1.5	4.7	Tremolite	Mg, Si, Ca, Fe	

Structure Type	Filter Density (s/mm2)	Concen-tration (struc/cc)	95% Confidence Interval (struc/cc)	Structure Count[1] Prim/Total
PCM Equivalent Structures-ISO	6.3	Not Applicable	Not Applicable	2

Gr	No.	Loc.	ID	Prim	Tot	Class	Len	Wid	Asp	Analyte	Elements	Comment
G1	9	D4	ADQ	2	2	F	17	1.35	12.6	Tremolite	Mg, Si, Ca, Fe	
G2	23	E2	ADQ	3	3	B	7	1.5	4.7	Tremolite	Mg, Si, Ca, Fe	

Structure Type	Filter Density (s/mm2)	Concen-tration (struc/cc)	95% Confidence Interval (struc/cc)	Structure Count[1] Prim/Total
PCM Equivalent Fibers-NIOSH		Not Applicable	Not Applicable	3

Gr	No.	Loc.	ID	Prim	Tot	Class	Len	Wid	Asp	Analyte	Elements	Comment
G1	9	D4	ADQ	2	2	F	17	1.35	12.6	Tremolite	Mg, Si, Ca, Fe	
G1	5	I2	AZQ		1	MF	6.7	1.25	5.4	Tremolite		
G2	23	E2	ADQ	3	3	B	7	1.5	4.7	Tremolite	Mg, Si, Ca, Fe	

Structure Type	Filter Density (s/mm2)	Concen-tration (struc/cc)	95% Confidence Interval (struc/cc)	Structure Count[1] Prim/Total
PCM Equivalent Structures-NIOSH	6.3	Not Applicable	Not Applicable	2

Gr	No.	Loc.	ID	Prim	Tot	Class	Len	Wid	Asp	Analyte	Elements	Comment
G1	9	D4	ADQ	2	2	F	17	1.35	12.6	Tremolite	Mg, Si, Ca, Fe	
G2	23	E2	ADQ	3	3	B	7	1.5	4.7	Tremolite	Mg, Si, Ca, Fe	

Structure Type	Filter Density (s/mm2)	Concen-tration (struc/cc)	95% Confidence Interval (struc/cc)	Structure Count[1] Prim/Total
Asbestos Structures >5um and 3:1	12.7	Not Applicable	Not Applicable	4

Gr	No.	Loc.	ID	Prim	Tot	Class	Len	Wid	Asp	Analyte	Elements	Comment
G1	5	I2	AZQ	1		MD 1-1	6.7	4.85	1.4	Tremolite	Mg, Al, Si, Ca, Fe	
G1	9	D4	ADQ	2	2	F	17	1.35	12.6	Tremolite	Mg, Si, Ca, Fe	
G2	27	H4	ADQ	4		MD 1-0	5.2	3.85	1.4	Tremolite	Mg, Si, Ca, Fe	
G2	23	E2	ADQ	3	3	B	7	1.5	4.7	Tremolite	Mg, Si, Ca, Fe	

Structure Type	Filter Density (s/mm2)	Concen-tration (struc/cc)	95% Confidence Interval (struc/cc)	Structure Count[1] Prim/Total
Asbestos Fibers and Bundles > 5um and 3:1		Not Applicable	Not Applicable	3

Gr	No.	Loc.	ID	Prim	Tot	Class	Len	Wid	Asp	Analyte	Elements	Comment
G1	5	I2	AZQ		1	MF	6.7	1.25	5.4	Tremolite		
G1	9	D4	ADQ	2	2	F	17	1.35	12.6	Tremolite	Mg, Si, Ca, Fe	
G2	23	E2	ADQ	3	3	B	7	1.5	4.7	Tremolite	Mg, Si, Ca, Fe	

Lab/Cor, Inc.
7619 6th Ave Nw
Seattle, WA 98117

Phone: (206) 781-0155
Fax: (206) 789-8424
http://www.labcor.net

A Professional Service Corporation in the Northwest

ISO 10312, Direct Count Categories

Job Number: 070434 **SEA**
Report Number: 070434R06
Client: Idaho National Laboratory
Date Received: 4/23/2007
Project Name: RARE

Lab/Cor Sample No.: S17
Client Sample No.: FB-4-R6
Description:
Filter Fraction: 1
Residual Ash Vol:
Aliquot Dilution: 0
Final Dilution: 0
Volume (L): 0
Lab Filter Area (mm2): 385
Grid Openings Analyzed: 35
Average Grid Opening Area: 0.009
Area Analyzed (mm2): 0.315
Analytical Sens. (struc/cc): 0
Dectection Limit. (struc/cc): 0

Structure Type	Filter Density (s/mm2)	Concen-tration (struc/cc)	95% Confidence Interval (struc/cc)	Structure Count[1] Prim/Total
PCM Equivalent Fibers-ISO		Not Applicable	Not Applicable	2

Gr	No.	Loc.	ID	Prim	Tot	Class	Len	Wid	Asp	Analyte	Elements	Comment
G1	5	I2	ADQ	3	3	F	6.2	1	6.2	Tremolite	Mg, Si, Ca	
G1	7	H4	ADQ		6	MF	5.6	1.1	5.1	Tremolite		

Structure Type	Filter Density (s/mm2)	Concen-tration (struc/cc)	95% Confidence Interval (struc/cc)	Structure Count[1] Prim/Total
PCM Equivalent Structures-ISO	3.2	Not Applicable	Not Applicable	1

Gr	No.	Loc.	ID	Prim	Tot	Class	Len	Wid	Asp	Analyte	Elements	Comment
G1	5	I2	ADQ	3	3	F	6.2	1	6.2	Tremolite	Mg, Si, Ca	

Structure Type	Filter Density (s/mm2)	Concen-tration (struc/cc)	95% Confidence Interval (struc/cc)	Structure Count[1] Prim/Total
PCM Equivalent Fibers-NIOSH		Not Applicable	Not Applicable	2

Gr	No.	Loc.	ID	Prim	Tot	Class	Len	Wid	Asp	Analyte	Elements	Comment
G1	5	I2	ADQ	3	3	F	6.2	1	6.2	Tremolite	Mg, Si, Ca	
G1	7	H4	ADQ		6	MF	5.6	1.1	5.1	Tremolite		

Structure Type	Filter Density (s/mm2)	Concen-tration (struc/cc)	95% Confidence Interval (struc/cc)	Structure Count[1] Prim/Total
PCM Equivalent Structures-NIOSH	3.2	Not Applicable	Not Applicable	1

Gr	No.	Loc.	ID	Prim	Tot	Class	Len	Wid	Asp	Analyte	Elements	Comment
G1	5	I2	ADQ	3	3	F	6.2	1	6.2	Tremolite	Mg, Si, Ca	

Structure Type	Filter Density (s/mm2)	Concen-tration (struc/cc)	95% Confidence Interval (struc/cc)	Structure Count[1] Prim/Total
Asbestos Structures >5um and 3:1	9.5	Not Applicable	Not Applicable	3

Gr	No.	Loc.	ID	Prim	Tot	Class	Len	Wid	Asp	Analyte	Elements	Comment
G1	7	H4	ADQ	6		MD 1-1	5.6	4	1.4	Tremolite	Mg, Si, Ca, Fe	
G1	6	J4	ADQ	5		MD 1-0	5.1	3.2	1.6	Tremolite	Mg, Si, Ca, Fe	
G1	5	I2	ADQ	3	3	F	6.2	1	6.2	Tremolite	Mg, Si, Ca	

Structure Type	Filter Density (s/mm2)	Concen-tration (struc/cc)	95% Confidence Interval (struc/cc)	Structure Count[1] Prim/Total
Asbestos Fibers and Bundles > 5um and 3:1		Not Applicable	Not Applicable	2

Gr	No.	Loc.	ID	Prim	Tot	Class	Len	Wid	Asp	Analyte	Elements	Comment
G1	5	I2	ADQ	3	3	F	6.2	1	6.2	Tremolite	Mg, Si, Ca	
G1	7	H4	ADQ		6	MF	5.6	1.1	5.1	Tremolite		

Lab/Cor, Inc.
7619 6th Ave Nw
Seattle, WA 98117

Phone: (206) 781-0155
Fax: (206) 789-8424
http://www.labcor.net

A Professional Service Corporation in the Northwest

ISO 10312, Direct Count Categories

Job Number: 070434 **SEA**
Client: Idaho National Laboratory
Project Name: RARE

Report Number: 070434R06
Date Received: 4/23/2007

Lab/Cor Sample No.: S18
Client Sample No.: FB-4-R7
Description:
Filter Fraction: 1
Residual Ash Vol:

Aliquot Dilution: 0
Final Dilution: 0

Volume (L): 0
Lab Filter Area (mm2): 385
Grid Openings Analyzed: 35
Average Grid Opening Area: 0.009
Area Analyzed (mm2): 0.315
Analytical Sens. (struc/cc): 0
Dectection Limit. (struc/cc): 0

Structure Type	Filter Density (s/mm2)	Concen-tration (struc/cc)	95% Confidence Interval (struc/cc)	Structure Count[1] Prim/Total
Asbestos Structures >5um and 3:1	3.2	Not Applicable	Not Applicable	1

Gr	No.	Loc.	ID	Prim	Tot	Class	Len	Wid	Asp	Analyte	Elements	Comment
G2	22	C2	ADQ	3		MD 1-0	5.2	2.5	2.1	Tremolite	Mg, Si, Ca, Fe	

Lab/Cor, Inc.
7619 6th Ave Nw
Seattle, WA 98117

Phone: (206) 781-0155
Fax: (206) 789-8424
http://www.labcor.net

A Professional Service Corporation in the Northwest

ISO 10312, Direct Count Categories

Job Number: 070434 **SEA**
Report Number: 070434R06
Client: Idaho National Laboratory
Date Received: 4/23/2007
Project Name: RARE

Lab/Cor Sample No.: S20
Client Sample No.: FB-3-R2
Description:
Filter Fraction: 1
Residual Ash Vol:
Aliquot Dilution: 0
Final Dilution: 0
Volume (L): 0
Lab Filter Area (mm2): 385
Grid Openings Analyzed: 35
Average Grid Opening Area: 0.009
Area Analyzed (mm2): 0.315
Analytical Sens. (struc/cc): 0
Dectection Limit. (struc/cc): 0

Structure Type	Filter Density (s/mm2)	Concen-tration (struc/cc)	95% Confidence Interval (struc/cc)	Structure Count[1] Prim/Total
PCM Equivalent Fibers-ISO		Not Applicable	Not Applicable	27

Gr	No.	Loc.	ID	Prim	Tot	Class	Len	Wid	Asp	Analyte	Elements	Comment
G1	18	F9	AQ	22	23	F	6.2	0.8	7.7	Tremolite		
G1	18	F9	AQ	23	24	F	5.5	1.25	4.4	Tremolite		
G1	17	H9	AQ	21	22	F	9.15	0.65	14.1	Tremolite		
G1	16	J9	AQ		19	MF	5.8	1.35	4.3	Tremolite		
G1	14	G7	AQ	18	18	F	15.85	1.5	10.6	Tremolite		
G1	14	G7	AQ	17	17	F	6.5	2	3.2	Tremolite		
G1	14	G7	AQ	16	16	F	36	1.5	24	Tremolite		
G1	12	C7	AQ	13	13	F	6	1.7	3.5	Tremolite		
G1	8	F4	AQ	10	10	B	12	2	6	Tremolite		
G1	5	I2	AQ	7	7	F	7.5	1.1	6.8	Tremolite		
G1	5	I2	AQ	5	5	F	9.2	0.5	18.4	Tremolite		
G1	5	I2	AQ		4	MF	7.85	1.1	7.1	Tremolite		
G1	2	C2	ADQ	2	2	F	19.2	1.7	11.3	Tremolite	Mg, Si, Ca	
G1	12	C7	AQ	14	14	F	7	1.35	5.2	Tremolite		
G2	29	D4	AQ		44	MF	24.5	0.5	49	Tremolite		
G2	35	I7	AQ	53	56	F	19	1.45	13.1	Tremolite		
G2	34	G7	AQ		54	MF	10	0.55	18.2	Tremolite		
G2	34	G7	AQ		53	MF	15	0.5	30	Tremolite		
G2	33	E7	AQ	50	52	F	5.7	0.45	12.7	Tremolite		
G2	33	E7	AQ	49	51	F	13	3	4.3	Tremolite		
G2	31	A7	AQ	47	49	F	5.4	1.2	4.5	Tremolite		
G2	21	A2	AQ	29	30	F	19.2	1.15	16.7	Tremolite		
G2	31	A7	AQ	45	47	F	8	1.5	5.3	Tremolite		
G2	28	F4	AQ	40	41	F	6.5	0.95	6.8	Tremolite		
G2	28	F4	AQ		43	MF	6.75	0.75	9	Tremolite		
G2	24	G2	AQ	34	35	F	25	2.75	9.1	Tremolite		
G2	31	A7	AQ	46	48	F	5.8	0.75	7.7	Tremolite		

PCM Equivalent Structures-ISO	66.7	Not Applicable	Not Applicable	21	

Gr	No.	Loc.	ID	Prim	Tot	Class	Len	Wid	Asp	Analyte	Elements	Comment
G1	14	G7	AQ	16	16	F	36	1.5	24	Tremolite		
G1	14	G7	AQ	18	18	F	15.85	1.5	10.6	Tremolite		
G1	18	F9	AQ	23	24	F	5.5	1.25	4.4	Tremolite		
G1	17	H9	AQ	21	22	F	9.15	0.65	14.1	Tremolite		
G1	14	G7	AQ	17	17	F	6.5	2	3.2	Tremolite		

Lab/Cor, Inc.
7619 6th Ave Nw
Seattle, WA 98117

Phone: (206) 781-0155
Fax: (206) 789-8424
http://www.labcor.net

A Professional Service Corporation in the Northwest

ISO 10312, Direct Count Categories

Job Number: 070434 **SEA** **Report Number:** 070434R06
Client: Idaho National Laboratory **Date Received:** 4/23/2007
Project Name: RARE

Lab/Cor Sample No.: S20
Client Sample No.: FB-3-R2
Description:
Filter Fraction: 1 **Aliquot Dilution:** 0
Residual Ash Vol: **Final Dilution:** 0

Volume (L): 0
Lab Filter Area (mm2): 385
Grid Openings Analyzed: 35
Average Grid Opening Area: 0.009
Area Analyzed (mm2): 0.315
Analytical Sens. (struc/cc): 0
Dectection Limit. (struc/cc): 0

Structure Type	Filter Density (s/mm2)	Concen-tration (struc/cc)	95% Confidence Interval (struc/cc)	Structure Count[1] Prim/Total
PCM Equivalent Structures-ISO	66.7	Not Applicable	Not Applicable	21

Gr	No.	Loc.	ID	Prim	Tot	Class	Len	Wid	Asp	Analyte	Elements	Comment
G1	12	C7	AQ	13	13	F	6	1.7	3.5	Tremolite		
G1	8	F4	AQ	10	10	B	12	2	6	Tremolite		
G1	2	C2	ADQ	2	2	F	19.2	1.7	11.3	Tremolite	Mg, Si, Ca	
G1	5	I2	AQ	7	7	F	7.5	1.1	6.8	Tremolite		
G1	12	C7	AQ	14	14	F	7	1.35	5.2	Tremolite		
G1	5	I2	AQ	5	5	F	9.2	0.5	18.4	Tremolite		
G1	18	F9	AQ	22	23	F	6.2	0.8	7.7	Tremolite		
G2	31	A7	AQ	45	47	F	8	1.5	5.3	Tremolite		
G2	35	I7	AQ	53	56	F	19	1.45	13.1	Tremolite		
G2	33	E7	AQ	50	52	F	5.7	0.45	12.7	Tremolite		
G2	33	E7	AQ	49	51	F	13	3	4.3	Tremolite		
G2	31	A7	AQ	46	48	F	5.8	0.75	7.7	Tremolite		
G2	28	F4	AQ	40	41	F	6.5	0.95	6.8	Tremolite		
G2	24	G2	AQ	34	35	F	25	2.75	9.1	Tremolite		
G2	21	A2	AQ	29	30	F	19.2	1.15	16.7	Tremolite		
G2	31	A7	AQ	47	49	F	5.4	1.2	4.5	Tremolite		

PCM Equivalent Fibers-NIOSH		Not Applicable	Not Applicable	27

Gr	No.	Loc.	ID	Prim	Tot	Class	Len	Wid	Asp	Analyte	Elements	Comment
G1	14	G7	AQ	17	17	F	6.5	2	3.2	Tremolite		
G1	5	I2	AQ		4	MF	7.85	1.1	7.1	Tremolite		
G1	18	F9	AQ	23	24	F	5.5	1.25	4.4	Tremolite		
G1	18	F9	AQ	22	23	F	6.2	0.8	7.7	Tremolite		
G1	17	H9	AQ	21	22	F	9.15	0.65	14.1	Tremolite		
G1	16	J9	AQ		19	MF	5.8	1.35	4.3	Tremolite		
G1	14	G7	AQ	18	18	F	15.85	1.5	10.6	Tremolite		
G1	14	G7	AQ	16	16	F	36	1.5	24	Tremolite		
G1	12	C7	AQ	14	14	F	7	1.35	5.2	Tremolite		
G1	12	C7	AQ	13	13	F	6	1.7	3.5	Tremolite		
G1	8	F4	AQ	10	10	B	12	2	6	Tremolite		
G1	5	I2	AQ	5	5	F	9.2	0.5	18.4	Tremolite		
G1	2	C2	ADQ	2	2	F	19.2	1.7	11.3	Tremolite	Mg, Si, Ca	
G1	5	I2	AQ	7	7	F	7.5	1.1	6.8	Tremolite		
G2	31	A7	AQ	46	48	F	5.8	0.75	7.7	Tremolite		
G2	34	G7	AQ		53	MF	15	0.5	30	Tremolite		

Lab/Cor, Inc.
7619 6th Ave Nw
Seattle, WA 98117

Phone: (206) 781-0155
Fax: (206) 789-8424
http://www.labcor.net

A Professional Service Corporation in the Northwest

ISO 10312, Direct Count Categories

Job Number: 070434 **SEA** **Report Number:** 070434R06
Client: Idaho National Laboratory **Date Received:** 4/23/2007
Project Name: RARE

Lab/Cor Sample No.: S20
Client Sample No.: FB-3-R2
Description:
Filter Fraction: 1 **Aliquot Dilution:** 0
Residual Ash Vol: **Final Dilution:** 0

Volume (L): 0
Lab Filter Area (mm2): 385
Grid Openings Analyzed: 35
Average Grid Opening Area: 0.009
Area Analyzed (mm2): 0.315
Analytical Sens. (struc/cc): 0
Dectection Limit. (struc/cc): 0

Structure Type	Filter Density (s/mm2)	Concen-tration (struc/cc)	95% Confidence Interval (struc/cc)	Structure Count[1] Prim/Total
PCM Equivalent Fibers-NIOSH		Not Applicable	Not Applicable	27

Gr	No.	Loc.	ID	Prim	Tot	Class	Len	Wid	Asp	Analyte	Elements	Comment
G2	34	G7	AQ		54	MF	10	0.55	18.2	Tremolite		
G2	33	E7	AQ	50	52	F	5.7	0.45	12.7	Tremolite		
G2	33	E7	AQ	49	51	F	13	3	4.3	Tremolite		
G2	31	A7	AQ	47	49	F	5.4	1.2	4.5	Tremolite		
G2	29	D4	AQ		44	MF	24.5	0.5	49	Tremolite		
G2	28	F4	AQ	40	41	F	6.5	0.95	6.8	Tremolite		
G2	28	F4	AQ		43	MF	6.75	0.75	9	Tremolite		
G2	35	I7	AQ	53	56	F	19	1.45	13.1	Tremolite		
G2	24	G2	AQ	34	35	F	25	2.75	9.1	Tremolite		
G2	21	A2	AQ	29	30	F	19.2	1.15	16.7	Tremolite		
G2	31	A7	AQ	45	47	F	8	1.5	5.3	Tremolite		

PCM Equivalent Structures-NIOSH	66.7	Not Applicable	Not Applicable	21	

Gr	No.	Loc.	ID	Prim	Tot	Class	Len	Wid	Asp	Analyte	Elements	Comment
G1	8	F4	AQ	10	10	B	12	2	6	Tremolite		
G1	18	F9	AQ	23	24	F	5.5	1.25	4.4	Tremolite		
G1	18	F9	AQ	22	23	F	6.2	0.8	7.7	Tremolite		
G1	17	H9	AQ	21	22	F	9.15	0.65	14.1	Tremolite		
G1	14	G7	AQ	18	18	F	15.85	1.5	10.6	Tremolite		
G1	14	G7	AQ	17	17	F	6.5	2	3.2	Tremolite		
G1	14	G7	AQ	16	16	F	36	1.5	24	Tremolite		
G1	12	C7	AQ	13	13	F	6	1.7	3.5	Tremolite		
G1	5	I2	AQ	7	7	F	7.5	1.1	6.8	Tremolite		
G1	5	I2	AQ	5	5	F	9.2	0.5	18.4	Tremolite		
G1	2	C2	ADQ	2	2	F	19.2	1.7	11.3	Tremolite	Mg, Si, Ca	
G1	12	C7	AQ	14	14	F	7	1.35	5.2	Tremolite		
G2	31	A7	AQ	45	47	F	8	1.5	5.3	Tremolite		
G2	33	E7	AQ	50	52	F	5.7	0.45	12.7	Tremolite		
G2	33	E7	AQ	49	51	F	13	3	4.3	Tremolite		
G2	35	I7	AQ	53	56	F	19	1.45	13.1	Tremolite		
G2	28	F4	AQ	40	41	F	6.5	0.95	6.8	Tremolite		
G2	24	G2	AQ	34	35	F	25	2.75	9.1	Tremolite		
G2	21	A2	AQ	29	30	F	19.2	1.15	16.7	Tremolite		
G2	31	A7	AQ	47	49	F	5.4	1.2	4.5	Tremolite		
G2	31	A7	AQ	46	48	F	5.8	0.75	7.7	Tremolite		

Lab/Cor, Inc.
7619 6th Ave Nw
Seattle, WA 98117

Phone: (206) 781-0155
Fax: (206) 789-8424
http://www.labcor.net

A Professional Service Corporation in the Northwest

ISO 10312, Direct Count Categories

Job Number: 070434 **SEA** **Report Number:** 070434R06
Client: Idaho National Laboratory **Date Received:** 4/23/2007
Project Name: RARE

Lab/Cor Sample No.: S20
Client Sample No.: FB-3-R2
Description:
Filter Fraction: 1 **Aliquot Dilution:** 0
Residual Ash Vol: **Final Dilution:** 0

Volume (L): 0
Lab Filter Area (mm2): 385
Grid Openings Analyzed: 35
Average Grid Opening Area: 0.009
Area Analyzed (mm2): 0.315
Analytical Sens. (struc/cc): 0
Dectection Limit. (struc/cc): 0

Structure Type	Filter Density (s/mm2)	Concen-tration (struc/cc)	95% Confidence Interval (struc/cc)	Structure Count[1] Prim/Total	
Asbestos Structures >5um and 3:1	76.2	Not Applicable	Not Applicable	24	

Gr	No.	Loc.	ID	Prim	Tot	Class	Len	Wid	Asp	Analyte	Elements	Comment
G1	12	C7	AQ	14	14	F	7	1.35	5.2	Tremolite		
G1	19	D9	AQ	26		MD 1-1	8.5	5.5	1.5	Tremolite	Mg, Al, Si, Ca, Fe	
G1	18	F9	AQ	22	23	F	6.2	0.8	7.7	Tremolite		
G1	17	H9	AQ	21	22	F	9.15	0.65	14.1	Tremolite		
G1	16	J9	AQ	19		MD 2-1	20	12	1.7	Tremolite	Mg, Si, Ca	
G1	14	G7	AQ	16	16	F	36	1.5	24	Tremolite		
G1	8	F4	AQ	10	10	B	12	2	6	Tremolite		
G1	5	I2	AQ	7	7	F	7.5	1.1	6.8	Tremolite		
G1	5	I2	AQ	5	5	F	9.2	0.5	18.4	Tremolite		
G1	5	I2	AQ	4		MD 1-1	10	4.5	2.2	Tremolite	Mg, Si, Ca	
G1	2	C2	ADQ	2	2	F	19.2	1.7	11.3	Tremolite	Mg, Si, Ca	
G1	14	G7	AQ	18	18	F	15.85	1.5	10.6	Tremolite		
G2	28	F4	AQ	42		MD 1-1	8	4.5	1.8	Tremolite	Mg, Si, Ca, Fe	
G2	35	I7	AQ	52		MD 1-0	6.5	5.8	1.1	Tremolite		
G2	34	G7	AQ	51		MD 2-2	30	20	1.5	Tremolite		
G2	33	E7	AQ	50	52	F	5.7	0.45	12.7	Tremolite		
G2	31	A7	AQ	46	48	F	5.8	0.75	7.7	Tremolite		
G2	35	I7	AQ	53	56	F	19	1.45	13.1	Tremolite		
G2	28	F4	AQ	40	41	F	6.5	0.95	6.8	Tremolite		
G2	26	J4	AQ	38		MD 1-0	6.85	4.2	1.6	Tremolite		
G2	24	G2	AQ	34	35	F	25	2.75	9.1	Tremolite		
G2	21	A2	AQ	29	30	F	19.2	1.15	16.7	Tremolite		
G2	29	D4	AQ	43		MD 2-1	30	23.5	1.3	Tremolite	Mg, Si, Ca, Fe	
G2	31	A7	AQ	45	47	F	8	1.5	5.3	Tremolite		

Asbestos Fibers and Bundles > 5um and 3:1		Not Applicable	Not Applicable		22

Gr	No.	Loc.	ID	Prim	Tot	Class	Len	Wid	Asp	Analyte	Elements	Comment
G1	8	F4	AQ	10	10	B	12	2	6	Tremolite		
G1	19	D9	AQ		27	MF	7	0.15	46.7	Tremolite		
G1	18	F9	AQ	22	23	F	6.2	0.8	7.7	Tremolite		
G1	17	H9	AQ	21	22	F	9.15	0.65	14.1	Tremolite		
G1	14	G7	AQ	18	18	F	15.85	1.5	10.6	Tremolite		
G1	12	C7	AQ	14	14	F	7	1.35	5.2	Tremolite		
G1	5	I2	AQ	7	7	F	7.5	1.1	6.8	Tremolite		
G1	5	I2	AQ	5	5	F	9.2	0.5	18.4	Tremolite		

Lab/Cor, Inc.
7619 6th Ave Nw
Seattle, WA 98117

Phone: (206) 781-0155
Fax: (206) 789-8424
http://www.labcor.net

A Professional Service Corporation in the Northwest

ISO 10312, Direct Count Categories

Job Number: 070434 **SEA**
Report Number: 070434R06
Client: Idaho National Laboratory
Date Received: 4/23/2007
Project Name: RARE

Lab/Cor Sample No.: S20
Client Sample No.: FB-3-R2
Description:
Filter Fraction: 1
Residual Ash Vol:
Aliquot Dilution: 0
Final Dilution: 0
Volume (L): 0
Lab Filter Area (mm2): 385
Grid Openings Analyzed: 35
Average Grid Opening Area: 0.009
Area Analyzed (mm2): 0.315
Analytical Sens. (struc/cc): 0
Dectection Limit. (struc/cc): 0

Structure Type	Filter Density (s/mm2)	Concen-tration (struc/cc)	95% Confidence Interval (struc/cc)	Structure Count[1] Prim/Total
Asbestos Fibers and Bundles > 5um and 3:1		Not Applicable	Not Applicable	22

Gr	No.	Loc.	ID	Prim	Tot	Class	Len	Wid	Asp	Analyte	Elements	Comment
G1	5	I2	AQ		4	MF	7.85	1.1	7.1	Tremolite		
G1	2	C2	ADQ	2	2	F	19.2	1.7	11.3	Tremolite	Mg, Si, Ca	
G1	14	G7	AQ	16	16	F	36	1.5	24	Tremolite		
G2	31	A7	AQ	46	48	F	5.8	0.75	7.7	Tremolite		
G2	28	F4	AQ		43	MF	6.75	0.75	9	Tremolite		
G2	35	I7	AQ	53	56	F	19	1.45	13.1	Tremolite		
G2	34	G7	AQ		54	MF	10	0.55	18.2	Tremolite		
G2	34	G7	AQ		53	MF	15	0.5	30	Tremolite		
G2	33	E7	AQ	50	52	F	5.7	0.45	12.7	Tremolite		
G2	28	F4	AQ	40	41	F	6.5	0.95	6.8	Tremolite		
G2	24	G2	AQ	34	35	F	25	2.75	9.1	Tremolite		
G2	21	A2	AQ	29	30	F	19.2	1.15	16.7	Tremolite		
G2	31	A7	AQ	45	47	F	8	1.5	5.3	Tremolite		
G2	29	D4	AQ		44	MF	24.5	0.5	49	Tremolite		

Lab/Cor, Inc.
7619 6th Ave Nw
Seattle, WA 98117

Phone: (206) 781-0155
Fax: (206) 789-8424
http://www.labcor.net

A Professional Service Corporation in the Northwest

ISO 10312, Direct Count Categories

Job Number: 070434 **SEA** **Report Number:** 070434R06
Client: Idaho National Laboratory **Date Received:** 4/23/2007
Project Name: RARE

Lab/Cor Sample No.: S23
Client Sample No.: FB-3-R5
Description:
Filter Fraction: 1 **Aliquot Dilution:** 0
Residual Ash Vol: **Final Dilution:** 0

Volume (L): 0
Lab Filter Area (mm2): 385
Grid Openings Analyzed: 35
Average Grid Opening Area: 0.009
Area Analyzed (mm2): 0.315
Analytical Sens. (struc/cc): 0
Dectection Limit. (struc/cc): 0

Structure Type	Filter Density (s/mm2)	Concen-tration (struc/cc)	95% Confidence Interval (struc/cc)	Structure Count[1] Prim/Total
PCM Equivalent Fibers-ISO		Not Applicable	Not Applicable	16

Gr	No.	Loc.	ID	Prim	Tot	Class	Len	Wid	Asp	Analyte	Elements	Comment
G1	8	F4	AQ	5	5	F	23.5	1.85	12.7	Tremolite	Mg, Al, Si, Ca, Fe	
G1	18	F9	AQ	15	15	F	13	0.5	26	Tremolite	Mg, Al, Si, Ca, Fe	
G1	17	H9	AQ	14	14	F	5.5	0.35	15.7	Tremolite	Mg, Al, Si, Ca, Fe	
G1	15	I7	AQ	13	13	F	7.5	0.7	10.7	Tremolite	Mg, Si, Ca, Fe	
G1	15	I7	AQ	12	12	F	6	0.9	6.7	Tremolite	Mg, Si, Ca, Fe	
G1	9	B4	AQ		7	MF	17.75	1.7	10.4	Tremolite		
G1	5	I2	AQ	4	4	F	7.75	1.15	6.7	Tremolite	Mg, Al, Si, Ca, Fe	
G1	4	G2	AZQ	1	1	F	10	0.85	11.8	Tremolite	Mg, Al, Si, Ca, Fe	
G1	4	G2	ADQ		3	MF	7	0.5	14	Tremolite		
G1	9	B4	AQ		8	MF	13.75	0.25	55	Tremolite		
G2	24	G2	ADQ	20	20	F	7	0.5	14	Tremolite		
G2	34	G7	AQ	23	23	F	5.5	0.75	7.3	Tremolite		
G2	34	G7	AQ	24	24	F	25	1	25	Tremolite		
G2	23	E2	AQ	19	19	F	14.5	3	4.8	Tremolite		
G2	32	C7	AQ	22	22	B	6.2	1.75	3.5	Tremolite	Mg, Al, Si, Ca, Fe	
G2	30	B4	AQ	21	21	F	13.25	3	4.4	Tremolite		

PCM Equivalent Structures-ISO	44.4	Not Applicable	Not Applicable	14	

Gr	No.	Loc.	ID	Prim	Tot	Class	Len	Wid	Asp	Analyte	Elements	Comment
G1	18	F9	AQ	15	15	F	13	0.5	26	Tremolite	Mg, Al, Si, Ca, Fe	
G1	4	G2	ADQ	3		MD 1-1	7	1.75	4	Tremolite	Mg, Al, Si, Ca, Fe	
G1	4	G2	AZQ	1	1	F	10	0.85	11.8	Tremolite	Mg, Al, Si, Ca, Fe	
G1	5	I2	AQ	4	4	F	7.75	1.15	6.7	Tremolite	Mg, Al, Si, Ca, Fe	
G1	8	F4	AQ	5	5	F	23.5	1.85	12.7	Tremolite	Mg, Al, Si, Ca, Fe	
G1	15	I7	AQ	12	12	F	6	0.9	6.7	Tremolite	Mg, Si, Ca, Fe	
G1	15	I7	AQ	13	13	F	7.5	0.7	10.7	Tremolite	Mg, Si, Ca, Fe	
G1	17	H9	AQ	14	14	F	5.5	0.35	15.7	Tremolite	Mg, Al, Si, Ca, Fe	
G2	34	G7	AQ	24	24	F	25	1	25	Tremolite		
G2	34	G7	AQ	23	23	F	5.5	0.75	7.3	Tremolite		
G2	32	C7	AQ	22	22	B	6.2	1.75	3.5	Tremolite	Mg, Al, Si, Ca, Fe	
G2	30	B4	AQ	21	21	F	13.25	3	4.4	Tremolite		
G2	23	E2	AQ	19	19	F	14.5	3	4.8	Tremolite		
G2	24	G2	ADQ	20	20	F	7	0.5	14	Tremolite		

PCM Equivalent Fibers-NIOSH		Not Applicable	Not Applicable		17

Gr	No.	Loc.	ID	Prim	Tot	Class	Len	Wid	Asp	Analyte	Elements	Comment

Lab/Cor, Inc.
7619 6th Ave Nw
Seattle, WA 98117

Phone: (206) 781-0155
Fax: (206) 789-8424
http://www.labcor.net

A Professional Service Corporation in the Northwest

ISO 10312, Direct Count Categories

Job Number: 070434 **SEA** **Report Number:** 070434R06
Client: Idaho National Laboratory **Date Received:** 4/23/2007
Project Name: RARE

Lab/Cor Sample No.: S23
Client Sample No.: FB-3-R5
Description:
Filter Fraction: 1 **Aliquot Dilution:** 0
Residual Ash Vol: **Final Dilution:** 0

Volume (L): 0
Lab Filter Area (mm2): 385
Grid Openings Analyzed: 35
Average Grid Opening Area: 0.009
Area Analyzed (mm2): 0.315
Analytical Sens. (struc/cc): 0
Dectection Limit. (struc/cc): 0

Structure Type	Filter Density (s/mm2)	Concen-tration (struc/cc)	95% Confidence Interval (struc/cc)	Structure Count[1] Prim/Total
PCM Equivalent Fibers-NIOSH		Not Applicable	Not Applicable	17

Gr	No.	Loc.	ID	Prim	Tot	Class	Len	Wid	Asp	Analyte	Elements	Comment
G1	14	G7	AQ	11	11	F	23	5	4.6	Tremolite	Mg, Si, Ca, Fe	
G1	17	H9	AQ	14	14	F	5.5	0.35	15.7	Tremolite	Mg, Al, Si, Ca, Fe	
G1	4	G2	AZQ	1	1	F	10	0.85	11.8	Tremolite	Mg, Al, Si, Ca, Fe	
G1	15	I7	AQ	13	13	F	7.5	0.7	10.7	Tremolite	Mg, Si, Ca, Fe	
G1	18	F9	AQ	15	15	F	13	0.5	26	Tremolite	Mg, Al, Si, Ca, Fe	
G1	15	I7	AQ	12	12	F	6	0.9	6.7	Tremolite	Mg, Si, Ca, Fe	
G1	9	B4	AQ		7	MF	17.75	1.7	10.4	Tremolite		
G1	5	I2	AQ	4	4	F	7.75	1.15	6.7	Tremolite	Mg, Al, Si, Ca, Fe	
G1	4	G2	ADQ		3	MF	7	0.5	14	Tremolite		
G1	8	F4	AQ	5	5	F	23.5	1.85	12.7	Tremolite	Mg, Al, Si, Ca, Fe	
G1	9	B4	AQ		8	MF	13.75	0.25	55	Tremolite		
G2	30	B4	AQ	21	21	F	13.25	3	4.4	Tremolite		
G2	34	G7	AQ	24	24	F	25	1	25	Tremolite		
G2	32	C7	AQ	22	22	B	6.2	1.75	3.5	Tremolite	Mg, Al, Si, Ca, Fe	
G2	24	G2	ADQ	20	20	F	7	0.5	14	Tremolite		
G2	23	E2	AQ	19	19	F	14.5	3	4.8	Tremolite		
G2	34	G7	AQ	23	23	F	5.5	0.75	7.3	Tremolite		

PCM Equivalent Structures-NIOSH	50.8	Not Applicable	Not Applicable	16	

Gr	No.	Loc.	ID	Prim	Tot	Class	Len	Wid	Asp	Analyte	Elements	Comment
G1	14	G7	AQ	11	11	F	23	5	4.6	Tremolite	Mg, Si, Ca, Fe	
G1	17	H9	AQ	14	14	F	5.5	0.35	15.7	Tremolite	Mg, Al, Si, Ca, Fe	
G1	18	F9	AQ	15	15	F	13	0.5	26	Tremolite	Mg, Al, Si, Ca, Fe	
G1	15	I7	AQ	13	13	F	7.5	0.7	10.7	Tremolite	Mg, Si, Ca, Fe	
G1	15	I7	AQ	12	12	F	6	0.9	6.7	Tremolite	Mg, Si, Ca, Fe	
G1	8	F4	AQ	5	5	F	23.5	1.85	12.7	Tremolite	Mg, Al, Si, Ca, Fe	
G1	5	I2	AQ	4	4	F	7.75	1.15	6.7	Tremolite	Mg, Al, Si, Ca, Fe	
G1	9	B4	AQ	7		MD 1-1	17.75	4.5	3.9	Tremolite	Mg, Al, Si, Ca, Fe	
G1	4	G2	AZQ	1	1	F	10	0.85	11.8	Tremolite	Mg, Al, Si, Ca, Fe	
G1	4	G2	ADQ	3		MD 1-1	7	1.75	4	Tremolite	Mg, Al, Si, Ca, Fe	
G2	30	B4	AQ	21	21	F	13.25	3	4.4	Tremolite		
G2	34	G7	AQ	24	24	F	25	1	25	Tremolite		
G2	32	C7	AQ	22	22	B	6.2	1.75	3.5	Tremolite	Mg, Al, Si, Ca, Fe	
G2	24	G2	ADQ	20	20	F	7	0.5	14	Tremolite		
G2	23	E2	AQ	19	19	F	14.5	3	4.8	Tremolite		

Lab/Cor, Inc.
7619 6th Ave Nw
Seattle, WA 98117

Phone: (206) 781-0155
Fax: (206) 789-8424
http://www.labcor.net

A Professional Service Corporation in the Northwest

ISO 10312, Direct Count Categories

Job Number: 070434 **SEA** **Report Number:** 070434R06
Client: Idaho National Laboratory **Date Received:** 4/23/2007
Project Name: RARE

Lab/Cor Sample No.: S23
Client Sample No.: FB-3-R5
Description:
Filter Fraction: 1 **Aliquot Dilution:** 0
Residual Ash Vol: **Final Dilution:** 0

Volume (L): 0
Lab Filter Area (mm2): 385
Grid Openings Analyzed: 35
Average Grid Opening Area: 0.009
Area Analyzed (mm2): 0.315
Analytical Sens. (struc/cc): 0
Dectection Limit. (struc/cc): 0

Structure Type	Filter Density (s/mm2)	Concen-tration (struc/cc)	95% Confidence Interval (struc/cc)	Structure Count[1] Prim/Total
PCM Equivalent Structures-NIOSH	50.8	Not Applicable	Not Applicable	16

Gr	No.	Loc.	ID	Prim	Tot	Class	Len	Wid	Asp	Analyte	Elements	Comment
G2	34	G7	AQ	23	23	F	5.5	0.75	7.3	Tremolite		

Asbestos Structures >5um and 3:1	50.8	Not Applicable	Not Applicable	16

Gr	No.	Loc.	ID	Prim	Tot	Class	Len	Wid	Asp	Analyte	Elements	Comment
G1	18	F9	AQ	16		MD 1-0	7.5	5.8	1.3	Tremolite		
G1	15	I7	AQ	12	12	F	6	0.9	6.7	Tremolite	Mg, Si, Ca, Fe	
G1	18	F9	AQ	17		MD 1-0	5.2	3	1.7	Tremolite		
G1	18	F9	AQ	15	15	F	13	0.5	26	Tremolite	Mg, Al, Si, Ca, Fe	
G1	17	H9	AQ	14	14	F	5.5	0.35	15.7	Tremolite	Mg, Al, Si, Ca, Fe	
G1	15	I7	AQ	13	13	F	7.5	0.7	10.7	Tremolite	Mg, Si, Ca, Fe	
G1	9	B4	AQ	7		MD 1-1	17.75	4.5	3.9	Tremolite	Mg, Al, Si, Ca, Fe	
G1	8	F4	AQ	5	5	F	23.5	1.85	12.7	Tremolite	Mg, Al, Si, Ca, Fe	
G1	5	I2	AQ	4	4	F	7.75	1.15	6.7	Tremolite	Mg, Al, Si, Ca, Fe	
G1	4	G2	ADQ	3		MD 1-1	7	1.75	4	Tremolite	Mg, Al, Si, Ca, Fe	
G1	4	G2	AZQ	1	1	F	10	0.85	11.8	Tremolite	Mg, Al, Si, Ca, Fe	
G1	9	B4	AQ	8		MD 1-1	13.75	7	2	Tremolite	Mg, Al, Si, Ca, Fe	
G2	32	C7	AQ	22	22	B	6.2	1.75	3.5	Tremolite	Mg, Al, Si, Ca, Fe	
G2	34	G7	AQ	23	23	F	5.5	0.75	7.3	Tremolite		
G2	34	G7	AQ	24	24	F	25	1	25	Tremolite		
G2	24	G2	ADQ	20	20	F	7	0.5	14	Tremolite		

Asbestos Fibers and Bundles > 5um and 3:1		Not Applicable	Not Applicable	14

Gr	No.	Loc.	ID	Prim	Tot	Class	Len	Wid	Asp	Analyte	Elements	Comment
G1	5	I2	AQ	4	4	F	7.75	1.15	6.7	Tremolite	Mg, Al, Si, Ca, Fe	
G1	18	F9	AQ	15	15	F	13	0.5	26	Tremolite	Mg, Al, Si, Ca, Fe	
G1	17	H9	AQ	14	14	F	5.5	0.35	15.7	Tremolite	Mg, Al, Si, Ca, Fe	
G1	15	I7	AQ	13	13	F	7.5	0.7	10.7	Tremolite	Mg, Si, Ca, Fe	
G1	15	I7	AQ	12	12	F	6	0.9	6.7	Tremolite	Mg, Si, Ca, Fe	
G1	9	B4	AQ		8	MF	13.75	0.25	55	Tremolite		
G1	8	F4	AQ	5	5	F	23.5	1.85	12.7	Tremolite	Mg, Al, Si, Ca, Fe	
G1	4	G2	AZQ	1	1	F	10	0.85	11.8	Tremolite	Mg, Al, Si, Ca, Fe	
G1	4	G2	ADQ		3	MF	7	0.5	14	Tremolite		
G1	9	B4	AQ		7	MF	17.75	1.7	10.4	Tremolite		
G2	24	G2	ADQ	20	20	F	7	0.5	14	Tremolite		
G2	32	C7	AQ	22	22	B	6.2	1.75	3.5	Tremolite	Mg, Al, Si, Ca, Fe	
G2	34	G7	AQ	23	23	F	5.5	0.75	7.3	Tremolite		

Lab/Cor, Inc.
7619 6th Ave Nw
Seattle, WA 98117

Phone: (206) 781-0155
Fax: (206) 789-8424
http://www.labcor.net

A Professional Service Corporation in the Northwest

ISO 10312, Direct Count Categories

Job Number: 070434 **SEA**
Client: Idaho National Laboratory
Project Name: RARE

Report Number: 070434R06
Date Received: 4/23/2007

Lab/Cor Sample No.: S23
Client Sample No.: FB-3-R5
Description:
Filter Fraction: 1
Residual Ash Vol:

Aliquot Dilution: 0
Final Dilution: 0

Volume (L): 0
Lab Filter Area (mm2): 385
Grid Openings Analyzed: 35
Average Grid Opening Area: 0.009
Area Analyzed (mm2): 0.315
Analytical Sens. (struc/cc): 0
Dectection Limit. (struc/cc): 0

Structure Type	Filter Density (s/mm2)	Concen-tration (struc/cc)	95% Confidence Interval (struc/cc)	Structure Count[1] Prim/Total	
Asbestos Fibers and Bundles > 5um and 3:1		Not Applicable	Not Applicable		14

Gr	No.	Loc.	ID	Prim	Tot	Class	Len	Wid	Asp	Analyte	Elements	Comment
G2	34	G7	AQ	24	24	F	25	1	25	Tremolite		

Lab/Cor, Inc.
7619 6th Ave Nw
Seattle, WA 98117

Phone: (206) 781-0155
Fax: (206) 789-8424
http://www.labcor.net

A Professional Service Corporation in the Northwest

ISO 10312, Direct Count Categories

Job Number: 070434 **SEA** **Report Number:** 070434R06
Client: Idaho National Laboratory **Date Received:** 4/23/2007
Project Name: RARE

Lab/Cor Sample No.: S25
Client Sample No.: FB-3-R7
Description:
Filter Fraction: 1 **Aliquot Dilution:** 0
Residual Ash Vol: **Final Dilution:** 0

Volume (L): 0
Lab Filter Area (mm2): 385
Grid Openings Analyzed: 35
Average Grid Opening Area: 0.009
Area Analyzed (mm2): 0.315
Analytical Sens. (struc/cc): 0
Dectection Limit. (struc/cc): 0

Structure Type	Filter Density (s/mm2)	Concen-tration (struc/cc)	95% Confidence Interval (struc/cc)	Structure Count[1] Prim/Total
PCM Equivalent Fibers-ISO		Not Applicable	Not Applicable	10

Gr	No.	Loc.	ID	Prim	Tot	Class	Len	Wid	Asp	Analyte	Elements	Comment
G1	18	F9	ADQ		10	MF	15	2	7.5	Tremolite		
G1	20	B9	ADQ		12	MF	12.5	1	12.5	Tremolite		
G1	19	D9	AZQ	11	11	F	5.5	0.22	25	Tremolite	Mg, Si, Ca, Fe	
G1	9	D4	AQ		5	MF	17.5	2.7	6.5	Tremolite		
G1	1	A2	ADQ		1	MF	5.7	0.6	9.5	Tremolite		
G1	11	A7	ADQ	7	7	F	5.2	0.4	13	Tremolite	Mg, Al, Si, Ca, Fe	
G2	21	A2	AQ	14	14	F	5.6	0.7	8	Tremolite		
G2	22	C2	ADQ	16	17	F	10.1	1	10.1	Tremolite	Mg, Al, Si, Ca, Fe	
G2	22	C2	AZQ		15	CF	7	0.25	28	Tremolite		
G2	28	F4	ADQ	17	18	F	7.2	1.5	4.8	Tremolite		

PCM Equivalent Structures-ISO	15.9	Not Applicable	Not Applicable	5	

Gr	No.	Loc.	ID	Prim	Tot	Class	Len	Wid	Asp	Analyte	Elements	Comment
G1	19	D9	AZQ	11	11	F	5.5	0.22	25	Tremolite	Mg, Si, Ca, Fe	
G1	11	A7	ADQ	7	7	F	5.2	0.4	13	Tremolite	Mg, Al, Si, Ca, Fe	
G2	28	F4	ADQ	17	18	F	7.2	1.5	4.8	Tremolite		
G2	21	A2	AQ	14	14	F	5.6	0.7	8	Tremolite		
G2	22	C2	ADQ	16	17	F	10.1	1	10.1	Tremolite	Mg, Al, Si, Ca, Fe	

PCM Equivalent Fibers-NIOSH		Not Applicable	Not Applicable		9

Gr	No.	Loc.	ID	Prim	Tot	Class	Len	Wid	Asp	Analyte	Elements	Comment
G1	1	A2	ADQ		1	MF	5.7	0.6	9.5	Tremolite		
G1	9	D4	AQ		5	MF	17.5	2.7	6.5	Tremolite		
G1	11	A7	ADQ	7	7	F	5.2	0.4	13	Tremolite	Mg, Al, Si, Ca, Fe	
G1	18	F9	ADQ		10	MF	15	2	7.5	Tremolite		
G1	20	B9	ADQ		12	MF	12.5	1	12.5	Tremolite		
G2	22	C2	ADQ	16	17	F	10.1	1	10.1	Tremolite	Mg, Al, Si, Ca, Fe	
G2	22	C2	AZQ		15	CF	7	0.25	28	Tremolite		
G2	28	F4	ADQ	17	18	F	7.2	1.5	4.8	Tremolite		
G2	21	A2	AQ	14	14	F	5.6	0.7	8	Tremolite		

PCM Equivalent Structures-NIOSH	15.9	Not Applicable	Not Applicable	5	

Gr	No.	Loc.	ID	Prim	Tot	Class	Len	Wid	Asp	Analyte	Elements	Comment
G1	11	A7	ADQ	7	7	F	5.2	0.4	13	Tremolite	Mg, Al, Si, Ca, Fe	
G1	20	B9	ADQ	12		MD 1-1	13.3	4	3.3	Tremolite	Mg, Si, Ca, Fe	
G2	21	A2	AQ	14	14	F	5.6	0.7	8	Tremolite		
G2	22	C2	ADQ	16	17	F	10.1	1	10.1	Tremolite	Mg, Al, Si, Ca, Fe	

Lab/Cor, Inc.
7619 6th Ave Nw
Seattle, WA 98117

Phone: (206) 781-0155
Fax: (206) 789-8424
http://www.labcor.net

A Professional Service Corporation in the Northwest

ISO 10312, Direct Count Categories

Job Number: 070434 **SEA** **Report Number:** 070434R06
Client: Idaho National Laboratory **Date Received:** 4/23/2007
Project Name: RARE

Lab/Cor Sample No.: S25
Client Sample No.: FB-3-R7
Description:
Filter Fraction: 1 **Aliquot Dilution:** 0
Residual Ash Vol: **Final Dilution:** 0

Volume (L): 0
Lab Filter Area (mm2): 385
Grid Openings Analyzed: 35
Average Grid Opening Area: 0.009
Area Analyzed (mm2): 0.315
Analytical Sens. (struc/cc): 0
Dectection Limit. (struc/cc): 0

Structure Type	Filter Density (s/mm2)	Concen-tration (struc/cc)	95% Confidence Interval (struc/cc)	Structure Count[1] Prim/Total
PCM Equivalent Structures-NIOSH	15.9	Not Applicable	Not Applicable	5

Gr	No.	Loc.	ID	Prim	Tot	Class	Len	Wid	Asp	Analyte	Elements	Comment
G2	28	F4	ADQ	17	18	F	7.2	1.5	4.8	Tremolite		

Asbestos Structures >5um and 3:1	31.7	Not Applicable	Not Applicable	10

Gr	No.	Loc.	ID	Prim	Tot	Class	Len	Wid	Asp	Analyte	Elements	Comment
G1	11	A7	ADQ	7	7	F	5.2	0.4	13	Tremolite	Mg, Al, Si, Ca, Fe	
G1	20	B9	ADQ	12		MD 1-1	13.3	4	3.3	Tremolite	Mg, Si, Ca, Fe	
G1	18	F9	ADQ	10		MD 1-1	15	12	1.2	Tremolite	Mg, Si, Ca, Fe	
G1	9	D4	AQ	5		MD 1-1	25	12	2.1	Tremolite	Mg, Si, Ca, Fe	
G1	1	A2	ADQ	1		MD 1-1	10	5.5	1.8	Tremolite	Mg, Al, Si, Ca, Fe	
G1	19	D9	AZQ	11	11	F	5.5	0.22	25	Tremolite	Mg, Si, Ca, Fe	
G2	21	A2	AQ	14	14	F	5.6	0.7	8	Tremolite		
G2	22	C2	ADQ	16	17	F	10.1	1	10.1	Tremolite	Mg, Al, Si, Ca, Fe	
G2	22	C2	AZQ	15		CD 2-1	7	4.5	1.6	Tremolite	Mg, Al, Si, K, Ca, Fe	
G2	35	I7	ADQ	19	20	F	5.3	0.18	29.4	Tremolite		

Asbestos Fibers and Bundles > 5um and 3:1		Not Applicable	Not Applicable	10

Gr	No.	Loc.	ID	Prim	Tot	Class	Len	Wid	Asp	Analyte	Elements	Comment
G1	18	F9	ADQ		10	MF	15	2	7.5	Tremolite		
G1	19	D9	AZQ	11	11	F	5.5	0.22	25	Tremolite	Mg, Si, Ca, Fe	
G1	20	B9	ADQ		12	MF	12.5	1	12.5	Tremolite		
G1	1	A2	ADQ		1	MF	5.7	0.6	9.5	Tremolite		
G1	9	D4	AQ		5	MF	17.5	2.7	6.5	Tremolite		
G1	11	A7	ADQ	7	7	F	5.2	0.4	13	Tremolite	Mg, Al, Si, Ca, Fe	
G2	21	A2	AQ	14	14	F	5.6	0.7	8	Tremolite		
G2	22	C2	ADQ	16	17	F	10.1	1	10.1	Tremolite	Mg, Al, Si, Ca, Fe	
G2	22	C2	AZQ		15	CF	7	0.25	28	Tremolite		
G2	35	I7	ADQ	19	20	F	5.3	0.18	29.4	Tremolite		

Lab/Cor, Inc.
7619 6th Ave Nw
Seattle, WA 98117

Phone: (206) 781-0155
Fax: (206) 789-8424
http://www.labcor.net

A Professional Service Corporation in the Northwest

ISO 10312, Direct Count Categories

Job Number: 070434 **SEA**
Report Number: 070434R06
Client: Idaho National Laboratory
Date Received: 4/23/2007
Project Name: RARE

Lab/Cor Sample No.: S26
Client Sample No.: FB-2-R1
Description:
Filter Fraction: 1
Residual Ash Vol:
Aliquot Dilution: 0
Final Dilution: 0
Volume (L): 0
Lab Filter Area (mm2): 385
Grid Openings Analyzed: 35
Average Grid Opening Area: 0.009
Area Analyzed (mm2): 0.315
Analytical Sens. (struc/cc): 0
Dectection Limit. (struc/cc): 0

Structure Type	Filter Density (s/mm2)	Concen-tration (struc/cc)	95% Confidence Interval (struc/cc)	Structure Count[1] Prim/Total
PCM Equivalent Fibers-ISO		Not Applicable	Not Applicable	108

Gr	No.	Loc.	ID	Prim	Tot	Class	Len	Wid	Asp	Analyte	Elements	Comment
G1	13	E7	AQ	73	73	F	12.2	2	6.1	Tremolite		
G1	16	J9	AQ		90	CF	24.35	2.85	8.5	Tremolite		
G1	15	I7	AQ	81	81	F	14.4	0.4	36	Tremolite		
G1	15	I7	AQ	79	79	F	5.1	1.2	4.2	Tremolite		
G1	15	I7	AQ		85	MF	8.7	1.8	4.8	Tremolite		
G1	15	I7	AQ		84	MF	12	1.25	9.6	Tremolite		
G1	16	J9	AQ		92	CF	7.9	1.7	4.6	Tremolite		
G1	14	G7	AQ	74	74	F	12.5	1.25	10	Tremolite		
G1	17	H9	AQ	92	96	F	9.75	0.9	10.8	Tremolite		
G1	12	C7	AQ	69	69	F	6.2	1.8	3.4	Tremolite		
G1	12	C7	AQ	67	67	F	7.5	2.5	3	Tremolite		
G1	15	I7	AQ		78	MF	9.65	1	9.6	Tremolite		
G1	16	J9	AQ		93	CF	5.5	0.9	6.1	Tremolite		
G1	12	C7	AQ		68	MF	7.35	0.65	11.3	Tremolite		
G1	17	H9	AQ		94	MF	7	0.65	10.8	Tremolite		
G1	15	I7	AQ	82	82	F	12.5	1	12.5	Tremolite		
G1	19	D9	AQ	100	104	F	35.5	2.5	14.2	Tremolite		
G1	19	D9	AQ	101	105	F	14	1.2	11.7	Tremolite		
G1	19	D9	AQ	102	106	F	11.8	3	3.9	Tremolite		
G1	19	D9	AQ	103	107	F	7.75	1.8	4.3	Tremolite		
G1	20	B9	AQ		114	MF	20.7	3	6.9	Tremolite		
G1	20	B9	AQ	106	110	F	12	0.4	30	Tremolite		
G1	20	B9	AQ	107	111	F	10	1.2	8.3	Tremolite		
G1	20	B9	AQ	108	112	F	10.5	2	5.2	Tremolite		
G1	20	B9	AQ	109	113	F	8	0.5	16	Tremolite		
G1	16	J9	AQ	88	89	F	10.5	0.7	15	Tremolite		
G1	3	E2	AQ	15	15	B	5.2	1.5	3.5	Tremolite		
G1	16	J9	AQ		91	CF	11.5	0.75	15.3	Tremolite		
G1	12	C7	AQ		63	MF	9	0.4	22.5	Tremolite		
G1	1	A2	AQ	2	2	F	10.5	0.75	14	Tremolite		
G1	1	A2	AQ	4	4	F	9	0.75	12	Tremolite		
G1	1	A2	AQ	5	5	F	20	1.5	13.3	Tremolite		
G1	1	A2	AQ	6	6	F	40	1.25	32	Tremolite		
G1	2	C2	AQ	10	10	B	19.5	1.25	15.6	Tremolite		

Lab/Cor, Inc.
7619 6th Ave Nw
Seattle, WA 98117

Phone: (206) 781-0155
Fax: (206) 789-8424
http://www.labcor.net

A Professional Service Corporation in the Northwest

ISO 10312, Direct Count Categories

Job Number: 070434 **SEA**
Report Number: 070434R06
Client: Idaho National Laboratory
Date Received: 4/23/2007
Project Name: RARE

Lab/Cor Sample No.: S26
Client Sample No.: FB-2-R1
Description:
Filter Fraction: 1
Residual Ash Vol:
Aliquot Dilution: 0
Final Dilution: 0
Volume (L): 0
Lab Filter Area (mm2): 385
Grid Openings Analyzed: 35
Average Grid Opening Area: 0.009
Area Analyzed (mm2): 0.315
Analytical Sens. (struc/cc): 0
Dectection Limit. (struc/cc): 0

Structure Type	Filter Density (s/mm2)	Concen-tration (struc/cc)	95% Confidence Interval (struc/cc)	Structure Count[1] Prim/Total
PCM Equivalent Fibers-ISO		Not Applicable	Not Applicable	108

Gr	No.	Loc.	ID	Prim	Tot	Class	Len	Wid	Asp	Analyte	Elements	Comment
G1	3	E2	AQ	16	16	F	7.5	1.75	4.3	Tremolite		
G1	4	G2	AQ	18	18	F	6.25	0.6	10.4	Tremolite		
G1	4	G2	AQ	20	20	F	6	1.2	5	Tremolite		
G1	5	I2	ADQ		23	MF	13	0.4	32.5	Tremolite		
G1	5	I2	AQ		22	MF	8.2	0.5	16.4	Tremolite		
G1	11	A7	AQ	59	59	F	10	3	3.3	Tremolite		
G1	2	C2	AQ	8	8	F	8	2.12	3.8	Tremolite		
G1	12	C7	AQ		62	MF	5.8	0.4	14.5	Tremolite		
G1	6	J4	AQ	28	28	F	8	2	4	Tremolite		
G1	11	A7	AQ	55	55	F	5.15	0.65	7.9	Tremolite		
G1	10	B4	AQ	54	54	F	8.5	0.35	24.3	Tremolite		
G1	10	B4	AQ	50	50	F	9.5	1	9.5	Tremolite		
G1	10	B4	AQ		51	MF	17.5	1.1	15.9	Tremolite		
G1	9	D4	AQ	47	47	F	10.2	1.25	8.2	Tremolite		
G1	9	D4	AQ	42	42	F	9.9	0.85	11.6	Tremolite		
G1	8	F4	AQ	38	38	F	70	1	70	Tremolite		
G1	7	H4	AQ	37	37	F	9.5	2	4.8	Tremolite		
G1	7	H4	AQ	34	34	F	28	2	14	Tremolite		
G1	7	H4	AQ	32	32	F	13.6	1.65	8.2	Tremolite		
G2	30	B4	AQ	158	164	F	13	0.6	21.7	Tremolite		
G2	32	C7	AQ		189	MF	29	0.7	41.4	Tremolite		
G2	32	C7	AQ		188	MF	8	0.75	10.7	Tremolite		
G2	32	C7	AQ		187	MF	7	0.6	11.7	Tremolite		
G2	26	J4	AQ	141	147	F	17	2	8.5	Tremolite		
G2	31	A7	AQ	172	181	F	5.75	0.35	16.4	Tremolite		
G2	35	I7	AQ	197	207	F	7.2	0.4	18	Tremolite		
G2	31	A7	AQ	171	180	F	7	0.85	8.2	Tremolite		
G2	29	D4	AQ	157	163	F	8.5	1	8.5	Tremolite		
G2	31	A7	AQ		177	CF	10.2	1.3	7.8	Tremolite		
G2	32	C7	AQ		190	MF	9	0.6	15	Tremolite		
G2	30	B4	AQ		165	MF	5.2	0.45	11.6	Tremolite		
G2	29	D4	AQ	153	159	F	10	0.7	14.3	Tremolite		
G2	31	A7	AQ		178	CF	7.2	1.8	4	Tremolite		
G2	32	C7	AQ	176	185	F	5.2	0.75	6.9	Tremolite		

Lab/Cor, Inc.
7619 6th Ave Nw
Seattle, WA 98117

Phone: (206) 781-0155
Fax: (206) 789-8424
http://www.labcor.net

A Professional Service Corporation in the Northwest

ISO 10312, Direct Count Categories

Job Number: 070434 **SEA**
Client: Idaho National Laboratory
Project Name: RARE

Report Number: 070434R06
Date Received: 4/23/2007

Lab/Cor Sample No.: S26
Client Sample No.: FB-2-R1
Description:
Filter Fraction: 1
Residual Ash Vol:

Aliquot Dilution: 0
Final Dilution: 0

Volume (L): 0
Lab Filter Area (mm2): 385
Grid Openings Analyzed: 35
Average Grid Opening Area: 0.009
Area Analyzed (mm2): 0.315
Analytical Sens. (struc/cc): 0
Dectection Limit. (struc/cc): 0

Structure Type	Filter Density (s/mm2)	Concen-tration (struc/cc)	95% Confidence Interval (struc/cc)	Structure Count[1] Prim/Total
PCM Equivalent Fibers-ISO		Not Applicable	Not Applicable	108

Gr	No.	Loc.	ID	Prim	Tot	Class	Len	Wid	Asp	Analyte	Elements	Comment
G2	32	C7	AQ	177	186	F	5.5	1	5.5	Tremolite		
G2	32	C7	AQ	181	191	F	8	0.55	14.5	Tremolite		
G2	33	E7	AQ		199	MF	6.85	1.2	5.7	Tremolite		
G2	33	E7	AQ	184	194	F	30	0.85	35.3	Tremolite		
G2	33	E7	AQ	186	196	F	9	2.2	4.1	Tremolite		
G2	33	E7	AQ	187	197	F	8.2	1.25	6.6	Tremolite		
G2	33	E7	AQ	190	200	F	6	1.5	4	Tremolite		
G2	33	E7	AQ	191	201	F	10	1	10	Tremolite		
G2	34	G7	AQ		204	MF	10.3	2.2	4.7	Tremolite		
G2	34	G7	AQ	192	202	F	11.2	1.1	10.2	Tremolite		
G2	34	G7	AQ	195	205	F	5.12	0.55	9.3	Tremolite		
G2	35	I7	AQ		210	MF	14	0.7	20	Tremolite		
G2	35	I7	AQ		208	MF	7.8	0.6	13	Tremolite		
G2	21	A2	AQ	113	118	F	7.5	2	3.8	Tremolite		
G2	29	D4	AQ		162	MF	20.2	0.45	44.9	Tremolite		
G2	27	H4	AQ	144	150	F	5.6	0.7	8	Tremolite		
G2	21	A2	AQ		119	MF	6	0.8	7.5	Tremolite		
G2	21	A2	AQ	112	117	F	23.5	3	7.8	Tremolite		
G2	21	A2	AQ	119	124	F	10.2	0.5	20.4	Tremolite		
G2	22	C2	AQ	122	127	F	7	1.1	6.4	Tremolite		
G2	23	E2	AQ		131	MF	12	2.5	4.8	Tremolite		
G2	23	E2	AQ	123	128	F	5.25	0.55	9.5	Tremolite		
G2	24	G2	AQ		134	CF	9	0.8	11.2	Tremolite		
G2	24	G2	AQ	129	135	F	10	1.2	8.3	Tremolite		
G2	25	I2	AQ	131	137	F	5.2	1.25	4.2	Tremolite		
G2	26	J4	AQ		140	MF	20	2.2	9.1	Tremolite		
G2	28	F4	AQ	151	157	F	6.2	1.35	4.6	Tremolite		
G2	21	A2	AQ		123	MF	9.2	0.55	16.7	Tremolite		
G2	26	J4	AQ		148	MF	5.35	1.2	4.5	Tremolite		
G2	29	D4	AQ		160	MF	6	0.65	9.2	Tremolite		
G2	29	D4	AQ		158	MF	9.5	0.85	11.2	Tremolite		
G2	28	F4	AQ	147	153	F	20	1.2	16.7	Tremolite		
G2	27	H4	AQ	146	152	B	8	2	4	Tremolite		
G2	26	J4	AQ	138	144	F	9.5	1.8	5.3	Tremolite		

Lab/Cor, Inc.
7619 6th Ave Nw
Seattle, WA 98117

Phone: (206) 781-0155
Fax: (206) 789-8424
http://www.labcor.net

A Professional Service Corporation in the Northwest

ISO 10312, Direct Count Categories

Job Number: 070434 **SEA** **Report Number:** 070434R06
Client: Idaho National Laboratory **Date Received:** 4/23/2007
Project Name: RARE

Lab/Cor Sample No.: S26
Client Sample No.: FB-2-R1
Description:
Filter Fraction: 1 **Aliquot Dilution:** 0
Residual Ash Vol: **Final Dilution:** 0

Volume (L): 0
Lab Filter Area (mm2): 385
Grid Openings Analyzed: 35
Average Grid Opening Area: 0.009
Area Analyzed (mm2): 0.315
Analytical Sens. (struc/cc): 0
Dectection Limit. (struc/cc): 0

Structure Type	Filter Density (s/mm2)	Concen-tration (struc/cc)	95% Confidence Interval (struc/cc)	Structure Count[1] Prim/Total
PCM Equivalent Fibers-ISO		Not Applicable	Not Applicable	108

Gr	No.	Loc.	ID	Prim	Tot	Class	Len	Wid	Asp	Analyte	Elements	Comment
G2	26	J4	AQ	133	139	F	6.2	1.85	3.4	Tremolite		
G2	26	J4	AQ	137	143	F	5.12	1.6	3.2	Tremolite		
G2	27	H4	AQ	145	151	F	7.75	0.8	9.7	Tremolite		
G2	26	J4	AQ	139	145	F	7	0.5	14	Tremolite		
G2	26	J4	AQ	140	146	F	10	1.25	8	Tremolite		
G2	27	H4	AQ	143	149	F	13.5	1.2	11.2	Tremolite		

PCM Equivalent Structures-ISO	244.4	Not Applicable	Not Applicable	77	

Gr	No.	Loc.	ID	Prim	Tot	Class	Len	Wid	Asp	Analyte	Elements	Comment
G1	20	B9	AQ	108	112	F	10.5	2	5.2	Tremolite		
G1	16	J9	AQ	88	89	F	10.5	0.7	15	Tremolite		
G1	12	C7	AQ	65		MD 1-0	5.2	1.5	3.5	Tremolite		
G1	12	C7	AQ	67	67	F	7.5	2.5	3	Tremolite		
G1	13	E7	AQ	73	73	F	12.2	2	6.1	Tremolite		
G1	14	G7	AQ	74	74	F	12.5	1.25	10	Tremolite		
G1	15	I7	AQ	79	79	F	5.1	1.2	4.2	Tremolite		
G1	15	I7	AQ	81	81	F	14.4	0.4	36	Tremolite		
G1	15	I7	AQ	82	82	F	12.5	1	12.5	Tremolite		
G1	12	C7	AQ	69	69	F	6.2	1.8	3.4	Tremolite		
G1	17	H9	AQ	92	96	F	9.75	0.9	10.8	Tremolite		
G1	19	D9	AQ	100	104	F	35.5	2.5	14.2	Tremolite		
G1	19	D9	AQ	101	105	F	14	1.2	11.7	Tremolite		
G1	19	D9	AQ	102	106	F	11.8	3	3.9	Tremolite		
G1	19	D9	AQ	103	107	F	7.75	1.8	4.3	Tremolite		
G1	20	B9	AQ	107	111	F	10	1.2	8.3	Tremolite		
G1	20	B9	AQ	109	113	F	8	0.5	16	Tremolite		
G1	11	A7	AQ	59	59	F	10	3	3.3	Tremolite		
G1	8	F4	AQ	38	38	F	70	1	70	Tremolite		
G1	20	B9	AQ	106	110	F	12	0.4	30	Tremolite		
G1	3	E2	AQ	16	16	F	7.5	1.75	4.3	Tremolite		
G1	9	D4	AQ	47	47	F	10.2	1.25	8.2	Tremolite		
G1	11	A7	AQ	55	55	F	5.15	0.65	7.9	Tremolite		
G1	1	A2	AQ	5	5	F	20	1.5	13.3	Tremolite		
G1	1	A2	AQ	6	6	F	40	1.25	32	Tremolite		
G1	2	C2	AQ	8	8	F	8	2.12	3.8	Tremolite		

Lab/Cor, Inc.
7619 6th Ave Nw
Seattle, WA 98117

Phone: (206) 781-0155
Fax: (206) 789-8424
http://www.labcor.net

A Professional Service Corporation in the Northwest

ISO 10312, Direct Count Categories

Job Number: 070434 **SEA**
Report Number: 070434R06
Client: Idaho National Laboratory
Date Received: 4/23/2007
Project Name: RARE

Lab/Cor Sample No.: S26
Client Sample No.: FB-2-R1
Description:
Filter Fraction: 1
Residual Ash Vol:
Aliquot Dilution: 0
Final Dilution: 0
Volume (L): 0
Lab Filter Area (mm2): 385
Grid Openings Analyzed: 35
Average Grid Opening Area: 0.009
Area Analyzed (mm2): 0.315
Analytical Sens. (struc/cc): 0
Dectection Limit. (struc/cc): 0

Structure Type	Filter Density (s/mm2)	Concen-tration (struc/cc)	95% Confidence Interval (struc/cc)	Structure Count[1] Prim/Total
PCM Equivalent Structures-ISO	244.4	Not Applicable	Not Applicable	77

Gr	No.	Loc.	ID	Prim	Tot	Class	Len	Wid	Asp	Analyte	Elements	Comment
G1	1	A2	AQ	2	2	F	10.5	0.75	14	Tremolite		
G1	3	E2	AQ	15	15	B	5.2	1.5	3.5	Tremolite		
G1	1	A2	AQ	4	4	F	9	0.75	12	Tremolite		
G1	4	G2	AQ	18	18	F	6.25	0.6	10.4	Tremolite		
G1	10	B4	AQ	50	50	F	9.5	1	9.5	Tremolite		
G1	6	J4	AQ	28	28	F	8	2	4	Tremolite		
G1	7	H4	AQ	32	32	F	13.6	1.65	8.2	Tremolite		
G1	7	H4	AQ	34	34	F	28	2	14	Tremolite		
G1	7	H4	AQ	37	37	F	9.5	2	4.8	Tremolite		
G1	9	D4	AQ	42	42	F	9.9	0.85	11.6	Tremolite		
G1	4	G2	AQ	20	20	F	6	1.2	5	Tremolite		
G1	2	C2	AQ	10	10	B	19.5	1.25	15.6	Tremolite		
G1	10	B4	AQ	54	54	F	8.5	0.35	24.3	Tremolite		
G2	32	C7	AQ	177	186	F	5.5	1	5.5	Tremolite		
G2	35	I7	AQ	197	207	F	7.2	0.4	18	Tremolite		
G2	32	C7	AQ	176	185	F	5.2	0.75	6.9	Tremolite		
G2	31	A7	AQ	172	181	F	5.75	0.35	16.4	Tremolite		
G2	31	A7	AQ	171	180	F	7	0.85	8.2	Tremolite		
G2	29	D4	AQ	154		MD 1-1	7	2	3.5	Tremolite		
G2	29	D4	AQ	157	163	F	8.5	1	8.5	Tremolite		
G2	30	B4	AQ	158	164	F	13	0.6	21.7	Tremolite		
G2	32	C7	AQ	179		MD 1-1	8	1.75	4.6	Tremolite		
G2	32	C7	AQ	181	191	F	8	0.55	14.5	Tremolite		
G2	33	E7	AQ	184	194	F	30	0.85	35.3	Tremolite		
G2	33	E7	AQ	186	196	F	9	2.2	4.1	Tremolite		
G2	33	E7	AQ	187	197	F	8.2	1.25	6.6	Tremolite		
G2	33	E7	AQ	190	200	F	6	1.5	4	Tremolite		
G2	33	E7	AQ	191	201	F	10	1	10	Tremolite		
G2	34	G7	AQ	195	205	F	5.12	0.55	9.3	Tremolite		
G2	26	J4	AQ	137	143	F	5.12	1.6	3.2	Tremolite		
G2	29	D4	AQ	153	159	F	10	0.7	14.3	Tremolite		
G2	34	G7	AQ	192	202	F	11.2	1.1	10.2	Tremolite		
G2	21	A2	AQ	119	124	F	10.2	0.5	20.4	Tremolite		
G2	28	F4	AQ	151	157	F	6.2	1.35	4.6	Tremolite		

Lab/Cor, Inc.
7619 6th Ave Nw
Seattle, WA 98117

Phone: (206) 781-0155
Fax: (206) 789-8424
http://www.labcor.net

A Professional Service Corporation in the Northwest

ISO 10312, Direct Count Categories

Job Number: 070434 **SEA** **Report Number:** 070434R06
Client: Idaho National Laboratory **Date Received:** 4/23/2007
Project Name: RARE

Lab/Cor Sample No.: S26
Client Sample No.: FB-2-R1
Description:
Filter Fraction: 1 **Aliquot Dilution:** 0
Residual Ash Vol: **Final Dilution:** 0

Volume (L): 0
Lab Filter Area (mm2): 385
Grid Openings Analyzed: 35
Average Grid Opening Area: 0.009
Area Analyzed (mm2): 0.315
Analytical Sens. (struc/cc): 0
Dectection Limit. (struc/cc): 0

Structure Type	Filter Density (s/mm2)	Concen-tration (struc/cc)	95% Confidence Interval (struc/cc)	Structure Count[1] Prim/Total
PCM Equivalent Structures-ISO	244.4	Not Applicable	Not Applicable	77

Gr	No.	Loc.	ID	Prim	Tot	Class	Len	Wid	Asp	Analyte	Elements	Comment
G2	26	J4	AQ	139	145	F	7	0.5	14	Tremolite		
G2	21	A2	AQ	112	117	F	23.5	3	7.8	Tremolite		
G2	21	A2	AQ	118		MD 1-1	10.2	1.8	5.7	Tremolite		
G2	22	C2	AQ	122	127	F	7	1.1	6.4	Tremolite		
G2	23	E2	AQ	123	128	F	5.25	0.55	9.5	Tremolite		
G2	24	G2	AQ	129	135	F	10	1.2	8.3	Tremolite		
G2	25	I2	AQ	131	137	F	5.2	1.25	4.2	Tremolite		
G2	26	J4	AQ	138	144	F	9.5	1.8	5.3	Tremolite		
G2	26	J4	AQ	140	146	F	10	1.25	8	Tremolite		
G2	26	J4	AQ	141	147	F	17	2	8.5	Tremolite		
G2	27	H4	AQ	143	149	F	13.5	1.2	11.2	Tremolite		
G2	27	H4	AQ	144	150	F	5.6	0.7	8	Tremolite		
G2	27	H4	AQ	145	151	F	7.75	0.8	9.7	Tremolite		
G2	26	J4	AQ	133	139	F	6.2	1.85	3.4	Tremolite		
G2	28	F4	AQ	147	153	F	20	1.2	16.7	Tremolite		
G2	21	A2	AQ	113	118	F	7.5	2	3.8	Tremolite		
G2	27	H4	AQ	146	152	B	8	2	4	Tremolite		

PCM Equivalent Fibers-NIOSH		Not Applicable	Not Applicable	113

Gr	No.	Loc.	ID	Prim	Tot	Class	Len	Wid	Asp	Analyte	Elements	Comment
G1	12	C7	AQ		68	MF	7.35	0.65	11.3	Tremolite		
G1	15	I7	AQ	79	79	F	5.1	1.2	4.2	Tremolite		
G1	15	I7	AQ		85	MF	8.7	1.8	4.8	Tremolite		
G1	15	I7	AQ		84	MF	12	1.25	9.6	Tremolite		
G1	15	I7	AQ		78	MF	9.65	1	9.6	Tremolite		
G1	14	G7	AQ	74	74	F	12.5	1.25	10	Tremolite		
G1	13	E7	AQ	73	73	F	12.2	2	6.1	Tremolite		
G1	12	C7	AQ	67	67	F	7.5	2.5	3	Tremolite		
G1	15	I7	AQ	81	81	F	14.4	0.4	36	Tremolite		
G1	19	D9	AQ	101	105	F	14	1.2	11.7	Tremolite		
G1	12	C7	AQ	69	69	F	6.2	1.8	3.4	Tremolite		
G1	15	I7	AQ	82	82	F	12.5	1	12.5	Tremolite		
G1	16	J9	AQ		90	CF	24.35	2.85	8.5	Tremolite		
G1	16	J9	AQ		91	CF	11.5	0.75	15.3	Tremolite		
G1	16	J9	AQ		92	CF	7.9	1.7	4.6	Tremolite		

Lab/Cor, Inc.
7619 6th Ave Nw
Seattle, WA 98117

Phone: (206) 781-0155
Fax: (206) 789-8424
http://www.labcor.net

A Professional Service Corporation in the Northwest

ISO 10312, Direct Count Categories

Job Number: 070434 **SEA**
Client: Idaho National Laboratory
Project Name: RARE

Report Number: 070434R06
Date Received: 4/23/2007

Lab/Cor Sample No.: S26
Client Sample No.: FB-2-R1
Description:
Filter Fraction: 1
Residual Ash Vol:

Aliquot Dilution: 0
Final Dilution: 0

Volume (L): 0
Lab Filter Area (mm2): 385
Grid Openings Analyzed: 35
Average Grid Opening Area: 0.009
Area Analyzed (mm2): 0.315
Analytical Sens. (struc/cc): 0
Dectection Limit. (struc/cc): 0

Structure Type	Filter Density (s/mm2)	Concen-tration (struc/cc)	95% Confidence Interval (struc/cc)	Structure Count[1] Prim/Total
PCM Equivalent Fibers-NIOSH		Not Applicable	Not Applicable	113

Gr	No.	Loc.	ID	Prim	Tot	Class	Len	Wid	Asp	Analyte	Elements	Comment
G1	16	J9	AQ		93	CF	5.5	0.9	6.1	Tremolite		
G1	16	J9	AQ	88	89	F	10.5	0.7	15	Tremolite		
G1	17	H9	AQ		94	MF	7	0.65	10.8	Tremolite		
G1	12	C7	AQ		63	MF	9	0.4	22.5	Tremolite		
G1	19	D9	AQ	100	104	F	35.5	2.5	14.2	Tremolite		
G1	7	H4	AQ	34	34	F	28	2	14	Tremolite		
G1	19	D9	AQ	102	106	F	11.8	3	3.9	Tremolite		
G1	19	D9	AQ	103	107	F	7.75	1.8	4.3	Tremolite		
G1	17	H9	AQ	92	96	F	9.75	0.9	10.8	Tremolite		
G1	5	I2	AQ		22	MF	8.2	0.5	16.4	Tremolite		
G1	20	B9	AQ	107	111	F	10	1.2	8.3	Tremolite		
G1	1	A2	AQ	2	2	F	10.5	0.75	14	Tremolite		
G1	1	A2	AQ	4	4	F	9	0.75	12	Tremolite		
G1	1	A2	AQ	5	5	F	20	1.5	13.3	Tremolite		
G1	1	A2	AQ	6	6	F	40	1.25	32	Tremolite		
G1	2	C2	AQ	8	8	F	8	2.12	3.8	Tremolite		
G1	2	C2	AQ	10	10	B	19.5	1.25	15.6	Tremolite		
G1	3	E2	AQ	15	15	B	5.2	1.5	3.5	Tremolite		
G1	3	E2	AQ	16	16	F	7.5	1.75	4.3	Tremolite		
G1	4	G2	AQ	18	18	F	6.25	0.6	10.4	Tremolite		
G1	8	F4	AQ	38	38	F	70	1	70	Tremolite		
G1	5	I2	ADQ		23	MF	13	0.4	32.5	Tremolite		
G1	12	C7	AQ		62	MF	5.8	0.4	14.5	Tremolite		
G1	6	J4	AQ	28	28	F	8	2	4	Tremolite		
G1	7	H4	AQ	32	32	F	13.6	1.65	8.2	Tremolite		
G1	7	H4	AQ	37	37	F	9.5	2	4.8	Tremolite		
G1	9	D4	AQ	42	42	F	9.9	0.85	11.6	Tremolite		
G1	9	D4	AQ	47	47	F	10.2	1.25	8.2	Tremolite		
G1	10	B4	AQ		51	MF	17.5	1.1	15.9	Tremolite		
G1	10	B4	AQ	50	50	F	9.5	1	9.5	Tremolite		
G1	10	B4	AQ	54	54	F	8.5	0.35	24.3	Tremolite		
G1	11	A7	AQ	55	55	F	5.15	0.65	7.9	Tremolite		
G1	11	A7	AQ	59	59	F	10	3	3.3	Tremolite		
G1	4	G2	AQ	20	20	F	6	1.2	5	Tremolite		

Lab/Cor, Inc.
7619 6th Ave Nw
Seattle, WA 98117

Phone: (206) 781-0155
Fax: (206) 789-8424
http://www.labcor.net

A Professional Service Corporation in the Northwest

ISO 10312, Direct Count Categories

Job Number: 070434 **SEA** **Report Number:** 070434R06
Client: Idaho National Laboratory **Date Received:** 4/23/2007
Project Name: RARE

Lab/Cor Sample No.: S26
Client Sample No.: FB-2-R1
Description:
Filter Fraction: 1 **Aliquot Dilution:** 0
Residual Ash Vol: **Final Dilution:** 0

Volume (L): 0
Lab Filter Area (mm2): 385
Grid Openings Analyzed: 35
Average Grid Opening Area: 0.009
Area Analyzed (mm2): 0.315
Analytical Sens. (struc/cc): 0
Dectection Limit. (struc/cc): 0

Structure Type	Filter Density (s/mm2)	Concen-tration (struc/cc)	95% Confidence Interval (struc/cc)	Structure Count[1] Prim/Total
PCM Equivalent Fibers-NIOSH		Not Applicable	Not Applicable	113

Gr	No.	Loc.	ID	Prim	Tot	Class	Len	Wid	Asp	Analyte	Elements	Comment
G1	20	B9	AQ	106	110	F	12	0.4	30	Tremolite		
G1	20	B9	AQ	108	112	F	10.5	2	5.2	Tremolite		
G1	20	B9	AQ	109	113	F	8	0.5	16	Tremolite		
G1	20	B9	AQ		114	MF	20.7	3	6.9	Tremolite		
G2	31	A7	AQ		177	CF	10.2	1.3	7.8	Tremolite		
G2	32	C7	AQ	177	186	F	5.5	1	5.5	Tremolite		
G2	32	C7	AQ	176	185	F	5.2	0.75	6.9	Tremolite		
G2	32	C7	AQ	174	183	F	20.65	3.8	5.4	Tremolite		
G2	32	C7	AQ		190	MF	9	0.6	15	Tremolite		
G2	32	C7	AQ		189	MF	29	0.7	41.4	Tremolite		
G2	32	C7	AQ		187	MF	7	0.6	11.7	Tremolite		
G2	32	C7	AQ	181	191	F	8	0.55	14.5	Tremolite		
G2	31	A7	AQ		178	CF	7.2	1.8	4	Tremolite		
G2	33	E7	AQ	186	196	F	9	2.2	4.1	Tremolite		
G2	30	B4	AQ	158	164	F	13	0.6	21.7	Tremolite		
G2	30	B4	AQ		165	MF	5.2	0.45	11.6	Tremolite		
G2	29	D4	AQ	157	163	F	8.5	1	8.5	Tremolite		
G2	31	A7	AQ	171	180	F	7	0.85	8.2	Tremolite		
G2	33	E7	AQ		199	MF	6.85	1.2	5.7	Tremolite		
G2	29	D4	AQ	153	159	F	10	0.7	14.3	Tremolite		
G2	33	E7	AQ	184	194	F	30	0.85	35.3	Tremolite		
G2	31	A7	AQ	172	181	F	5.75	0.35	16.4	Tremolite		
G2	33	E7	AQ	187	197	F	8.2	1.25	6.6	Tremolite		
G2	33	E7	AQ	190	200	F	6	1.5	4	Tremolite		
G2	33	E7	AQ	191	201	F	10	1	10	Tremolite		
G2	34	G7	AQ		204	MF	10.3	2.2	4.7	Tremolite		
G2	34	G7	AQ	192	202	F	11.2	1.1	10.2	Tremolite		
G2	34	G7	AQ	195	205	F	5.12	0.55	9.3	Tremolite		
G2	35	I7	AQ		208	MF	7.8	0.6	13	Tremolite		
G2	35	I7	AQ		209	MF	17	3.8	4.5	Tremolite		
G2	35	I7	AQ		210	MF	14	0.7	20	Tremolite		
G2	35	I7	AQ	197	207	F	7.2	0.4	18	Tremolite		
G2	33	E7	AQ	183	193	F	14	3.8	3.7	Tremolite		
G2	23	E2	AQ		131	MF	12	2.5	4.8	Tremolite		

Lab/Cor, Inc.
7619 6th Ave Nw
Seattle, WA 98117

Phone: (206) 781-0155
Fax: (206) 789-8424
http://www.labcor.net

A Professional Service Corporation in the Northwest

ISO 10312, Direct Count Categories

Job Number: 070434 **SEA** **Report Number:** 070434R06
Client: Idaho National Laboratory **Date Received:** 4/23/2007
Project Name: RARE

Lab/Cor Sample No.: S26
Client Sample No.: FB-2-R1
Description:
Filter Fraction: 1 **Aliquot Dilution:** 0
Residual Ash Vol: **Final Dilution:** 0

Volume (L): 0
Lab Filter Area (mm2): 385
Grid Openings Analyzed: 35
Average Grid Opening Area: 0.009
Area Analyzed (mm2): 0.315
Analytical Sens. (struc/cc): 0
Dectection Limit. (struc/cc): 0

Structure Type	Filter Density (s/mm2)	Concen-tration (struc/cc)	95% Confidence Interval (struc/cc)	Structure Count[1] Prim/Total
PCM Equivalent Fibers-NIOSH		Not Applicable	Not Applicable	113

Gr	No.	Loc.	ID	Prim	Tot	Class	Len	Wid	Asp	Analyte	Elements	Comment
G2	26	J4	AQ		148	MF	5.35	1.2	4.5	Tremolite		
G2	26	J4	AQ		140	MF	20	2.2	9.1	Tremolite		
G2	25	I2	AQ	131	137	F	5.2	1.25	4.2	Tremolite		
G2	24	G2	AQ	129	135	F	10	1.2	8.3	Tremolite		
G2	24	G2	AQ		134	CF	9	0.8	11.2	Tremolite		
G2	26	J4	AQ	133	139	F	6.2	1.85	3.4	Tremolite		
G2	29	D4	AQ		162	MF	20.2	0.45	44.9	Tremolite		
G2	23	E2	AQ	123	128	F	5.25	0.55	9.5	Tremolite		
G2	32	C7	AQ		188	MF	8	0.75	10.7	Tremolite		
G2	21	A2	AQ	119	124	F	10.2	0.5	20.4	Tremolite		
G2	21	A2	AQ	113	118	F	7.5	2	3.8	Tremolite		
G2	21	A2	AQ	112	117	F	23.5	3	7.8	Tremolite		
G2	21	A2	AQ		123	MF	9.2	0.55	16.7	Tremolite		
G2	21	A2	AQ		119	MF	6	0.8	7.5	Tremolite		
G2	24	G2	AQ		133	CF	14	4	3.5	Tremolite		
G2	28	F4	AQ	147	153	F	20	1.2	16.7	Tremolite		
G2	22	C2	AQ	122	127	F	7	1.1	6.4	Tremolite		
G2	26	J4	AQ	137	143	F	5.12	1.6	3.2	Tremolite		
G2	29	D4	AQ		160	MF	6	0.65	9.2	Tremolite		
G2	29	D4	AQ		158	MF	9.5	0.85	11.2	Tremolite		
G2	28	F4	AQ	150	156	F	18	4	4.5	Tremolite		
G2	27	H4	AQ	146	152	B	8	2	4	Tremolite		
G2	27	H4	AQ	145	151	F	7.75	0.8	9.7	Tremolite		
G2	26	J4	AQ	140	146	F	10	1.25	8	Tremolite		
G2	26	J4	AQ	138	144	F	9.5	1.8	5.3	Tremolite		
G2	28	F4	AQ	151	157	F	6.2	1.35	4.6	Tremolite		
G2	26	J4	AQ	139	145	F	7	0.5	14	Tremolite		
G2	26	J4	AQ	141	147	F	17	2	8.5	Tremolite		
G2	27	H4	AQ	143	149	F	13.5	1.2	11.2	Tremolite		
G2	27	H4	AQ	144	150	F	5.6	0.7	8	Tremolite		

PCM Equivalent Structures-NIOSH	257.1	Not Applicable	Not Applicable	81	

Gr	No.	Loc.	ID	Prim	Tot	Class	Len	Wid	Asp	Analyte	Elements	Comment
G1	16	J9	AQ	88	89	F	10.5	0.7	15	Tremolite		
G1	12	C7	AQ	67	67	F	7.5	2.5	3	Tremolite		

Lab/Cor, Inc.
7619 6th Ave Nw
Seattle, WA 98117

Phone: (206) 781-0155
Fax: (206) 789-8424
http://www.labcor.net

A Professional Service Corporation in the Northwest

ISO 10312, Direct Count Categories

Job Number: 070434 **SEA** **Report Number:** 070434R06
Client: Idaho National Laboratory **Date Received:** 4/23/2007
Project Name: RARE

Lab/Cor Sample No.: S26
Client Sample No.: FB-2-R1
Description:
Filter Fraction: 1 **Aliquot Dilution:** 0
Residual Ash Vol: **Final Dilution:** 0

Volume (L): 0
Lab Filter Area (mm2): 385
Grid Openings Analyzed: 35
Average Grid Opening Area: 0.009
Area Analyzed (mm2): 0.315
Analytical Sens. (struc/cc): 0
Dectection Limit. (struc/cc): 0

Structure Type	Filter Density (s/mm2)	Concen-tration (struc/cc)	95% Confidence Interval (struc/cc)	Structure Count[1] Prim/Total
PCM Equivalent Structures-NIOSH	257.1	Not Applicable	Not Applicable	81

Gr	No.	Loc.	ID	Prim	Tot	Class	Len	Wid	Asp	Analyte	Elements	Comment
G1	20	B9	AQ	109	113	F	8	0.5	16	Tremolite		
G1	12	C7	AQ	65		MD 1-0	5.2	1.5	3.5	Tremolite		
G1	13	E7	AQ	73	73	F	12.2	2	6.1	Tremolite		
G1	14	G7	AQ	74	74	F	12.5	1.25	10	Tremolite		
G1	15	I7	AQ	79	79	F	5.1	1.2	4.2	Tremolite		
G1	15	I7	AQ	81	81	F	14.4	0.4	36	Tremolite		
G1	15	I7	AQ	82	82	F	12.5	1	12.5	Tremolite		
G1	12	C7	AQ	69	69	F	6.2	1.8	3.4	Tremolite		
G1	17	H9	AQ	92	96	F	9.75	0.9	10.8	Tremolite		
G1	19	D9	AQ	100	104	F	35.5	2.5	14.2	Tremolite		
G1	19	D9	AQ	101	105	F	14	1.2	11.7	Tremolite		
G1	19	D9	AQ	102	106	F	11.8	3	3.9	Tremolite		
G1	19	D9	AQ	103	107	F	7.75	1.8	4.3	Tremolite		
G1	20	B9	AQ	106	110	F	12	0.4	30	Tremolite		
G1	20	B9	AQ	108	112	F	10.5	2	5.2	Tremolite		
G1	10	B4	AQ	54	54	F	8.5	0.35	24.3	Tremolite		
G1	11	A7	AQ	55	55	F	5.15	0.65	7.9	Tremolite		
G1	20	B9	AQ	107	111	F	10	1.2	8.3	Tremolite		
G1	3	E2	AQ	16	16	F	7.5	1.75	4.3	Tremolite		
G1	11	A7	AQ	59	59	F	10	3	3.3	Tremolite		
G1	1	A2	AQ	5	5	F	20	1.5	13.3	Tremolite		
G1	1	A2	AQ	6	6	F	40	1.25	32	Tremolite		
G1	2	C2	AQ	8	8	F	8	2.12	3.8	Tremolite		
G1	3	E2	AQ	15	15	B	5.2	1.5	3.5	Tremolite		
G1	1	A2	AQ	4	4	F	9	0.75	12	Tremolite		
G1	4	G2	AQ	18	18	F	6.25	0.6	10.4	Tremolite		
G1	4	G2	AQ	20	20	F	6	1.2	5	Tremolite		
G1	6	J4	AQ	28	28	F	8	2	4	Tremolite		
G1	10	B4	AQ	51		MD 1-1	18.5	4	4.6	Tremolite		
G1	2	C2	AQ	10	10	B	19.5	1.25	15.6	Tremolite		
G1	1	A2	AQ	2	2	F	10.5	0.75	14	Tremolite		
G1	7	H4	AQ	32	32	F	13.6	1.65	8.2	Tremolite		
G1	10	B4	AQ	50	50	F	9.5	1	9.5	Tremolite		
G1	9	D4	AQ	47	47	F	10.2	1.25	8.2	Tremolite		

Lab/Cor, Inc.
7619 6th Ave Nw
Seattle, WA 98117

Phone: (206) 781-0155
Fax: (206) 789-8424
http://www.labcor.net

A Professional Service Corporation in the Northwest

ISO 10312, Direct Count Categories

Job Number: 070434 **SEA** **Report Number:** 070434R06
Client: Idaho National Laboratory **Date Received:** 4/23/2007
Project Name: RARE

Lab/Cor Sample No.: S26
Client Sample No.: FB-2-R1
Description:
Filter Fraction: 1 **Aliquot Dilution:** 0
Residual Ash Vol: **Final Dilution:** 0

Volume (L): 0
Lab Filter Area (mm2): 385
Grid Openings Analyzed: 35
Average Grid Opening Area: 0.009
Area Analyzed (mm2): 0.315
Analytical Sens. (struc/cc): 0
Dectection Limit. (struc/cc): 0

Structure Type	Filter Density (s/mm2)	Concen-tration (struc/cc)	95% Confidence Interval (struc/cc)	Structure Count[1] Prim/Total
PCM Equivalent Structures-NIOSH	257.1	Not Applicable	Not Applicable	81

Gr	No.	Loc.	ID	Prim	Tot	Class	Len	Wid	Asp	Analyte	Elements	Comment
G1	9	D4	AQ	42	42	F	9.9	0.85	11.6	Tremolite		
G1	8	F4	AQ	38	38	F	70	1	70	Tremolite		
G1	7	H4	AQ	37	37	F	9.5	2	4.8	Tremolite		
G1	7	H4	AQ	34	34	F	28	2	14	Tremolite		
G2	32	C7	AQ	181	191	F	8	0.55	14.5	Tremolite		
G2	30	B4	AQ	158	164	F	13	0.6	21.7	Tremolite		
G2	31	A7	AQ	171	180	F	7	0.85	8.2	Tremolite		
G2	31	A7	AQ	172	181	F	5.75	0.35	16.4	Tremolite		
G2	32	C7	AQ	174	183	F	20.65	3.8	5.4	Tremolite		
G2	32	C7	AQ	176	185	F	5.2	0.75	6.9	Tremolite		
G2	32	C7	AQ	177	186	F	5.5	1	5.5	Tremolite		
G2	32	C7	AQ	179		MD 1-1	8	1.75	4.6	Tremolite		
G2	29	D4	AQ	154		MD 1-1	7	2	3.5	Tremolite		
G2	33	E7	AQ	183	193	F	14	3.8	3.7	Tremolite		
G2	33	E7	AQ	184	194	F	30	0.85	35.3	Tremolite		
G2	33	E7	AQ	186	196	F	9	2.2	4.1	Tremolite		
G2	33	E7	AQ	187	197	F	8.2	1.25	6.6	Tremolite		
G2	33	E7	AQ	190	200	F	6	1.5	4	Tremolite		
G2	33	E7	AQ	191	201	F	10	1	10	Tremolite		
G2	34	G7	AQ	192	202	F	11.2	1.1	10.2	Tremolite		
G2	28	F4	AQ	151	157	F	6.2	1.35	4.6	Tremolite		
G2	35	I7	AQ	197	207	F	7.2	0.4	18	Tremolite		
G2	29	D4	AQ	153	159	F	10	0.7	14.3	Tremolite		
G2	34	G7	AQ	195	205	F	5.12	0.55	9.3	Tremolite		
G2	23	E2	AQ	123	128	F	5.25	0.55	9.5	Tremolite		
G2	29	D4	AQ	157	163	F	8.5	1	8.5	Tremolite		
G2	28	F4	AQ	150	156	F	18	4	4.5	Tremolite		
G2	21	A2	AQ	112	117	F	23.5	3	7.8	Tremolite		
G2	21	A2	AQ	113	118	F	7.5	2	3.8	Tremolite		
G2	21	A2	AQ	118		MD 1-1	10.2	1.8	5.7	Tremolite		
G2	22	C2	AQ	122	127	F	7	1.1	6.4	Tremolite		
G2	24	G2	AQ	129	135	F	10	1.2	8.3	Tremolite		
G2	25	I2	AQ	131	137	F	5.2	1.25	4.2	Tremolite		
G2	26	J4	AQ	133	139	F	6.2	1.85	3.4	Tremolite		

Lab/Cor, Inc.
7619 6th Ave Nw
Seattle, WA 98117

Phone: (206) 781-0155
Fax: (206) 789-8424
http://www.labcor.net

A Professional Service Corporation in the Northwest

ISO 10312, Direct Count Categories

Job Number: 070434 **SEA** **Report Number:** 070434R06
Client: Idaho National Laboratory **Date Received:** 4/23/2007
Project Name: RARE

Lab/Cor Sample No.: S26
Client Sample No.: FB-2-R1
Description:
Filter Fraction: 1 **Aliquot Dilution:** 0
Residual Ash Vol: **Final Dilution:** 0

Volume (L): 0
Lab Filter Area (mm2): 385
Grid Openings Analyzed: 35
Average Grid Opening Area: 0.009
Area Analyzed (mm2): 0.315
Analytical Sens. (struc/cc): 0
Dectection Limit. (struc/cc): 0

Structure Type	Filter Density (s/mm2)	Concen-tration (struc/cc)	95% Confidence Interval (struc/cc)	Structure Count[1] Prim/Total
PCM Equivalent Structures-NIOSH	257.1	Not Applicable	Not Applicable	81

Gr	No.	Loc.	ID	Prim	Tot	Class	Len	Wid	Asp	Analyte	Elements	Comment
G2	26	J4	AQ	137	143	F	5.12	1.6	3.2	Tremolite		
G2	27	H4	AQ	146	152	B	8	2	4	Tremolite		
G2	21	A2	AQ	119	124	F	10.2	0.5	20.4	Tremolite		
G2	28	F4	AQ	147	153	F	20	1.2	16.7	Tremolite		
G2	26	J4	AQ	138	144	F	9.5	1.8	5.3	Tremolite		
G2	27	H4	AQ	145	151	F	7.75	0.8	9.7	Tremolite		
G2	27	H4	AQ	144	150	F	5.6	0.7	8	Tremolite		
G2	27	H4	AQ	143	149	F	13.5	1.2	11.2	Tremolite		
G2	26	J4	AQ	141	147	F	17	2	8.5	Tremolite		
G2	26	J4	AQ	140	146	F	10	1.25	8	Tremolite		
G2	26	J4	AQ	139	145	F	7	0.5	14	Tremolite		

Asbestos Structures >5um and 3:1	307.9	Not Applicable	Not Applicable	97

Gr	No.	Loc.	ID	Prim	Tot	Class	Len	Wid	Asp	Analyte	Elements	Comment
G1	16	J9	AQ	88	89	F	10.5	0.7	15	Tremolite		
G1	12	C7	AQ	65		MD 1-0	5.2	1.5	3.5	Tremolite		
G1	12	C7	AQ	68		MD 1-1	11.5	6	1.9	Tremolite		
G1	13	E7	AQ	73	73	F	12.2	2	6.1	Tremolite		
G1	14	G7	AQ	74	74	F	12.5	1.25	10	Tremolite		
G1	15	I7	AQ	78		MD 1-1	10.7	5	2.1	Tremolite		
G1	15	I7	AQ	81	81	F	14.4	0.4	36	Tremolite		
G1	15	I7	AQ	82	82	F	12.5	1	12.5	Tremolite		
G1	15	I7	AQ	84		MD 2-2	18	12	1.5	Tremolite		
G1	15	I7	AQ	85		MD 1-0	6	5.8	1	Tremolite		
G1	13	E7	AQ	72	72	F	7	0.18	38.9	Tremolite		
G1	16	J9	AQ	89		CD 4-4	26.5	13	2	Tremolite		
G1	17	H9	AQ	90		MD 1-1	8	5	1.6	Tremolite		
G1	17	H9	AQ	92	96	F	9.75	0.9	10.8	Tremolite		
G1	18	F9	AQ	98		MD 1-0	7.5	6	1.2	Tremolite		
G1	19	D9	AQ	100	104	F	35.5	2.5	14.2	Tremolite		
G1	19	D9	AQ	101	105	F	14	1.2	11.7	Tremolite		
G1	20	B9	AQ	106	110	F	12	0.4	30	Tremolite		
G1	20	B9	AQ	107	111	F	10	1.2	8.3	Tremolite		
G1	20	B9	AQ	108	112	F	10.5	2	5.2	Tremolite		
G1	20	B9	AQ	110		MD 2-1	22	8	2.8	Tremolite		

Lab/Cor, Inc.
7619 6th Ave Nw
Seattle, WA 98117

Phone: (206) 781-0155
Fax: (206) 789-8424
http://www.labcor.net

A Professional Service Corporation in the Northwest

ISO 10312, Direct Count Categories

Job Number: 070434 **SEA** **Report Number:** 070434R06
Client: Idaho National Laboratory **Date Received:** 4/23/2007
Project Name: RARE

Lab/Cor Sample No.: S26
Client Sample No.: FB-2-R1
Description:
Filter Fraction: 1 **Aliquot Dilution:** 0
Residual Ash Vol: **Final Dilution:** 0

Volume (L): 0
Lab Filter Area (mm2): 385
Grid Openings Analyzed: 35
Average Grid Opening Area: 0.009
Area Analyzed (mm2): 0.315
Analytical Sens. (struc/cc): 0
Dectection Limit. (struc/cc): 0

Structure Type	Filter Density (s/mm2)	Concen-tration (struc/cc)	95% Confidence Interval (struc/cc)	Structure Count[1] Prim/Total
Asbestos Structures >5um and 3:1	307.9	Not Applicable	Not Applicable	97

Gr	No.	Loc.	ID	Prim	Tot	Class	Len	Wid	Asp	Analyte	Elements	Comment
G1	3	E2	AQ	15	15	B	5.2	1.5	3.5	Tremolite		
G1	20	B9	AQ	109	113	F	8	0.5	16	Tremolite		
G1	3	E2	AQ	14		MD 1-0	10	9	1.1	Tremolite		
G1	12	C7	AQ	63		MD 1-1	9	7	1.3	Tremolite		
G1	1	A2	AQ	4	4	F	9	0.75	12	Tremolite		
G1	1	A2	AQ	5	5	F	20	1.5	13.3	Tremolite		
G1	1	A2	AQ	6	6	F	40	1.25	32	Tremolite		
G1	2	C2	AZQ	9		MD 1-0	10	9	1.1	Tremolite	Mg, Al, Si, Ca, Fe	
G1	4	G2	AQ	20	20	F	6	1.2	5	Tremolite		
G1	4	G2	AQ	18	18	F	6.25	0.6	10.4	Tremolite		
G1	1	A2	AQ	2	2	F	10.5	0.75	14	Tremolite		
G1	5	I2	ADQ	23		MD 1-1	18	14	1.3	Tremolite	Mg, Al, Si, Ca, Fe	
G1	5	I2	AQ	22		MD 1-1	12	10	1.2	Tremolite		
G1	10	B4	AQ	51		MD 1-1	18.5	4	4.6	Tremolite		
G1	2	C2	AQ	10	10	B	19.5	1.25	15.6	Tremolite		
G1	7	H4	AQ	32	32	F	13.6	1.65	8.2	Tremolite		
G1	12	C7	AQ	62		MD 1-1	8	4	2	Tremolite		
G1	10	B4	AQ	54	54	F	8.5	0.35	24.3	Tremolite		
G1	11	A7	AQ	55	55	F	5.15	0.65	7.9	Tremolite		
G1	10	B4	AQ	50	50	F	9.5	1	9.5	Tremolite		
G1	9	D4	AQ	47	47	F	10.2	1.25	8.2	Tremolite		
G1	9	D4	AQ	42	42	F	9.9	0.85	11.6	Tremolite		
G1	8	F4	AQ	38	38	F	70	1	70	Tremolite		
G1	7	H4	AQ	34	34	F	28	2	14	Tremolite		
G2	32	C7	AQ	180		MD 1-1	29	10	2.9	Tremolite		
G2	32	C7	AQ	178		MD 1-1	7	3	2.3	Tremolite		
G2	32	C7	AQ	177	186	F	5.5	1	5.5	Tremolite		
G2	32	C7	AQ	176	185	F	5.2	0.75	6.9	Tremolite		
G2	32	C7	AQ	179		MD 1-1	8	1.75	4.6	Tremolite		
G2	32	C7	AQ	175		MD 1-0	6	4	1.5	Tremolite		
G2	32	C7	AQ	174	183	F	20.65	3.8	5.4	Tremolite		
G2	31	A7	AQ	172	181	F	5.75	0.35	16.4	Tremolite		
G2	31	A7	AQ	170		CD 3-2	13	11	1.2	Tremolite		
G2	32	C7	AQ	181	191	F	8	0.55	14.5	Tremolite		

Lab/Cor, Inc.
7619 6th Ave Nw
Seattle, WA 98117

Phone: (206) 781-0155
Fax: (206) 789-8424
http://www.labcor.net

A Professional Service Corporation in the Northwest

ISO 10312, Direct Count Categories

Job Number: 070434 **SEA** **Report Number:** 070434R06
Client: Idaho National Laboratory **Date Received:** 4/23/2007
Project Name: RARE

Lab/Cor Sample No.: S26
Client Sample No.: FB-2-R1
Description:
Filter Fraction: 1 **Aliquot Dilution:** 0
Residual Ash Vol: **Final Dilution:** 0

Volume (L): 0
Lab Filter Area (mm2): 385
Grid Openings Analyzed: 35
Average Grid Opening Area: 0.009
Area Analyzed (mm2): 0.315
Analytical Sens. (struc/cc): 0
Dectection Limit. (struc/cc): 0

Structure Type	Filter Density (s/mm2)	Concen-tration (struc/cc)	95% Confidence Interval (struc/cc)	Structure Count[1] Prim/Total
Asbestos Structures >5um and 3:1	307.9	Not Applicable	Not Applicable	97

Gr	No.	Loc.	ID	Prim	Tot	Class	Len	Wid	Asp	Analyte	Elements	Comment
G2	30	B4	AQ	159		MD 1-1	5.2	3	1.7	Tremolite		
G2	31	A7	AQ	171	180	F	7	0.85	8.2	Tremolite		
G2	33	E7	AQ	184	194	F	30	0.85	35.3	Tremolite		
G2	33	E7	AQ	187	197	F	8.2	1.25	6.6	Tremolite		
G2	33	E7	AQ	188		MD 1-0	7	5.52	1.3	Tremolite		
G2	33	E7	AQ	189		MD 1-1	7	3.5	2	Tremolite		
G2	33	E7	AQ	191	201	F	10	1	10	Tremolite		
G2	34	G7	AQ	192	202	F	11.2	1.1	10.2	Tremolite		
G2	34	G7	AQ	194		MD 1-1	14	9	1.6	Tremolite		
G2	35	I7	AQ	196		MD 1-0	15	8	1.9	Tremolite		
G2	30	B4	AQ	158	164	F	13	0.6	21.7	Tremolite		
G2	35	I7	AQ	199		MD 1-1	19	9	2.1	Tremolite		
G2	34	G7	AQ	195	205	F	5.12	0.55	9.3	Tremolite		
G2	35	I7	AQ	200		MD 1-1	14	7	2	Tremolite		
G2	35	I7	AQ	198		MD 1-1	8	5.8	1.4	Tremolite		
G2	21	A2	AQ	117		MD 1-0	6	3	2	Tremolite		
G2	35	I7	AQ	197	207	F	7.2	0.4	18	Tremolite		
G2	29	D4	AQ	157	163	F	8.5	1	8.5	Tremolite		
G2	21	A2	AQ	114		MD 1-1	8.5	6	1.4	Tremolite		
G2	21	A2	AQ	118		MD 1-1	10.2	1.8	5.7	Tremolite		
G2	21	A2	AQ	119	124	F	10.2	0.5	20.4	Tremolite		
G2	22	C2	AQ	122	127	F	7	1.1	6.4	Tremolite		
G2	23	E2	AQ	123	128	F	5.25	0.55	9.5	Tremolite		
G2	23	E2	AQ	126		MD 1-1	16	7	2.3	Tremolite		
G2	24	G2	AQ	128		CD 2-2	14	8	1.8	Tremolite		
G2	24	G2	AQ	129	135	F	10	1.2	8.3	Tremolite		
G2	26	J4	AQ	134		MD 1-1	22	10	2.2	Tremolite		
G2	26	J4	AQ	138	144	F	9.5	1.8	5.3	Tremolite		
G2	29	D4	AQ	156		MD 1-1	27	10	2.7	Tremolite		
G2	21	A2	AQ	112	117	F	23.5	3	7.8	Tremolite		
G2	26	J4	AQ	139	145	F	7	0.5	14	Tremolite		
G2	29	D4	AQ	154		MD 1-1	7	2	3.5	Tremolite		
G2	29	D4	AQ	153	159	F	10	0.7	14.3	Tremolite		
G2	29	D4	AQ	152		MD 1-1	10	4	2.5	Tremolite		

Lab/Cor, Inc.
7619 6th Ave Nw
Seattle, WA 98117

Phone: (206) 781-0155
Fax: (206) 789-8424
http://www.labcor.net

A Professional Service Corporation in the Northwest

ISO 10312, Direct Count Categories

Job Number: 070434 **SEA** **Report Number:** 070434R06
Client: Idaho National Laboratory **Date Received:** 4/23/2007
Project Name: RARE

Lab/Cor Sample No.: S26
Client Sample No.: FB-2-R1
Description:
Filter Fraction: 1 **Aliquot Dilution:** 0
Residual Ash Vol: **Final Dilution:** 0

Volume (L): 0
Lab Filter Area (mm2): 385
Grid Openings Analyzed: 35
Average Grid Opening Area: 0.009
Area Analyzed (mm2): 0.315
Analytical Sens. (struc/cc): 0
Dectection Limit. (struc/cc): 0

Structure Type	Filter Density (s/mm2)	Concen-tration (struc/cc)	95% Confidence Interval (struc/cc)	Structure Count[1] Prim/Total
Asbestos Structures >5um and 3:1	307.9	Not Applicable	Not Applicable	97

Gr	No.	Loc.	ID	Prim	Tot	Class	Len	Wid	Asp	Analyte	Elements	Comment
G2	28	F4	AQ	147	153	F	20	1.2	16.7	Tremolite		
G2	26	J4	AQ	141	147	F	17	2	8.5	Tremolite		
G2	27	H4	AQ	145	151	F	7.75	0.8	9.7	Tremolite		
G2	27	H4	AQ	144	150	F	5.6	0.7	8	Tremolite		
G2	27	H4	AQ	143	149	F	13.5	1.2	11.2	Tremolite		
G2	26	J4	AQ	142		MD 1-1	11.5	5	2.3	Tremolite		
G2	27	H4	AQ	146	152	B	8	2	4	Tremolite		
G2	26	J4	AQ	140	146	F	10	1.25	8	Tremolite		

Asbestos Fibers and Bundles > 5um and 3:1		Not Applicable	Not Applicable	87

Gr	No.	Loc.	ID	Prim	Tot	Class	Len	Wid	Asp	Analyte	Elements	Comment
G1	16	J9	AQ		90	CF	24.35	2.85	8.5	Tremolite		
G1	15	I7	AQ	82	82	F	12.5	1	12.5	Tremolite		
G1	15	I7	AQ	81	81	F	14.4	0.4	36	Tremolite		
G1	15	I7	AQ		84	MF	12	1.25	9.6	Tremolite		
G1	13	E7	AQ	73	73	F	12.2	2	6.1	Tremolite		
G1	14	G7	AQ	74	74	F	12.5	1.25	10	Tremolite		
G1	16	J9	AQ		91	CF	11.5	0.75	15.3	Tremolite		
G1	20	B9	AQ	106	110	F	12	0.4	30	Tremolite		
G1	15	I7	AQ		78	MF	9.65	1	9.6	Tremolite		
G1	16	J9	AQ		93	CF	5.5	0.9	6.1	Tremolite		
G1	16	J9	AQ	88	89	F	10.5	0.7	15	Tremolite		
G1	17	H9	AQ		94	MF	7	0.65	10.8	Tremolite		
G1	17	H9	AQ	92	96	F	9.75	0.9	10.8	Tremolite		
G1	19	D9	AQ	100	104	F	35.5	2.5	14.2	Tremolite		
G1	20	B9	AQ		114	MF	20.7	3	6.9	Tremolite		
G1	20	B9	AQ	107	111	F	10	1.2	8.3	Tremolite		
G1	20	B9	AQ	108	112	F	10.5	2	5.2	Tremolite		
G1	20	B9	AQ	109	113	F	8	0.5	16	Tremolite		
G1	13	E7	AQ	72	72	F	7	0.18	38.9	Tremolite		
G1	10	B4	AQ	54	54	F	8.5	0.35	24.3	Tremolite		
G1	19	D9	AQ	101	105	F	14	1.2	11.7	Tremolite		
G1	2	C2	AQ	10	10	B	19.5	1.25	15.6	Tremolite		
G1	12	C7	AQ		62	MF	5.8	0.4	14.5	Tremolite		
G1	12	C7	AQ		68	MF	7.35	0.65	11.3	Tremolite		

Lab/Cor, Inc.
7619 6th Ave Nw
Seattle, WA 98117

Phone: (206) 781-0155
Fax: (206) 789-8424
http://www.labcor.net

A Professional Service Corporation in the Northwest

ISO 10312, Direct Count Categories

Job Number: 070434 **SEA** **Report Number:** 070434R06
Client: Idaho National Laboratory **Date Received:** 4/23/2007
Project Name: RARE

Lab/Cor Sample No.: S26
Client Sample No.: FB-2-R1
Description:
Filter Fraction: 1 **Aliquot Dilution:** 0
Residual Ash Vol: **Final Dilution:** 0

Volume (L): 0
Lab Filter Area (mm2): 385
Grid Openings Analyzed: 35
Average Grid Opening Area: 0.009
Area Analyzed (mm2): 0.315
Analytical Sens. (struc/cc): 0
Dectection Limit. (struc/cc): 0

Structure Type	Filter Density (s/mm2)	Concen-tration (struc/cc)	95% Confidence Interval (struc/cc)	Structure Count[1] Prim/Total
Asbestos Fibers and Bundles > 5um and 3:1		Not Applicable	Not Applicable	87

Gr	No.	Loc.	ID	Prim	Tot	Class	Len	Wid	Asp	Analyte	Elements	Comment
G1	1	A2	AQ	2	2	F	10.5	0.75	14	Tremolite		
G1	1	A2	AQ	4	4	F	9	0.75	12	Tremolite		
G1	1	A2	AQ	6	6	F	40	1.25	32	Tremolite		
G1	3	E2	AQ	15	15	B	5.2	1.5	3.5	Tremolite		
G1	4	G2	AQ	18	18	F	6.25	0.6	10.4	Tremolite		
G1	4	G2	AQ	20	20	F	6	1.2	5	Tremolite		
G1	5	I2	ADQ		23	MF	13	0.4	32.5	Tremolite		
G1	11	A7	AQ	55	55	F	5.15	0.65	7.9	Tremolite		
G1	1	A2	AQ	5	5	F	20	1.5	13.3	Tremolite		
G1	12	C7	AQ		63	MF	9	0.4	22.5	Tremolite		
G1	5	I2	AQ		22	MF	8.2	0.5	16.4	Tremolite		
G1	10	B4	AQ	50	50	F	9.5	1	9.5	Tremolite		
G1	10	B4	AQ		51	MF	17.5	1.1	15.9	Tremolite		
G1	9	D4	AQ	42	42	F	9.9	0.85	11.6	Tremolite		
G1	8	F4	AQ	38	38	F	70	1	70	Tremolite		
G1	7	H4	AQ	34	34	F	28	2	14	Tremolite		
G1	7	H4	AQ	32	32	F	13.6	1.65	8.2	Tremolite		
G1	9	D4	AQ	47	47	F	10.2	1.25	8.2	Tremolite		
G2	30	B4	AQ	158	164	F	13	0.6	21.7	Tremolite		
G2	32	C7	AQ		190	MF	9	0.6	15	Tremolite		
G2	32	C7	AQ		189	MF	29	0.7	41.4	Tremolite		
G2	32	C7	AQ		188	MF	8	0.75	10.7	Tremolite		
G2	32	C7	AQ		187	MF	7	0.6	11.7	Tremolite		
G2	31	A7	AQ	172	181	F	5.75	0.35	16.4	Tremolite		
G2	30	B4	AQ		165	MF	5.2	0.45	11.6	Tremolite		
G2	31	A7	AQ		177	CF	10.2	1.3	7.8	Tremolite		
G2	32	C7	AQ	181	191	F	8	0.55	14.5	Tremolite		
G2	32	C7	AQ	174	183	F	20.65	3.8	5.4	Tremolite		
G2	31	A7	AQ	171	180	F	7	0.85	8.2	Tremolite		
G2	32	C7	AQ	176	185	F	5.2	0.75	6.9	Tremolite		
G2	32	C7	AQ	177	186	F	5.5	1	5.5	Tremolite		
G2	35	I7	AQ	197	207	F	7.2	0.4	18	Tremolite		
G2	33	E7	AQ		199	MF	6.85	1.2	5.7	Tremolite		
G2	29	D4	AQ	157	163	F	8.5	1	8.5	Tremolite		

Lab/Cor, Inc.
7619 6th Ave Nw
Seattle, WA 98117

Phone: (206) 781-0155
Fax: (206) 789-8424
http://www.labcor.net

A Professional Service Corporation in the Northwest

ISO 10312, Direct Count Categories

Job Number: 070434 **SEA** **Report Number:** 070434R06
Client: Idaho National Laboratory **Date Received:** 4/23/2007
Project Name: RARE

Lab/Cor Sample No.: S26
Client Sample No.: FB-2-R1
Description:
Filter Fraction: 1 **Aliquot Dilution:** 0
Residual Ash Vol: **Final Dilution:** 0

Volume (L): 0
Lab Filter Area (mm2): 385
Grid Openings Analyzed: 35
Average Grid Opening Area: 0.009
Area Analyzed (mm2): 0.315
Analytical Sens. (struc/cc): 0
Dectection Limit. (struc/cc): 0

Structure Type	Filter Density (s/mm2)	Concen-tration (struc/cc)	95% Confidence Interval (struc/cc)	Structure Count[1] Prim/Total
Asbestos Fibers and Bundles > 5um and 3:1		Not Applicable	Not Applicable	87

Gr	No.	Loc.	ID	Prim	Tot	Class	Len	Wid	Asp	Analyte	Elements	Comment
G2	33	E7	AQ	187	197	F	8.2	1.25	6.6	Tremolite		
G2	33	E7	AQ	191	201	F	10	1	10	Tremolite		
G2	34	G7	AQ	192	202	F	11.2	1.1	10.2	Tremolite		
G2	34	G7	AQ	195	205	F	5.12	0.55	9.3	Tremolite		
G2	35	I7	AQ		210	MF	14	0.7	20	Tremolite		
G2	35	I7	AQ		208	MF	7.8	0.6	13	Tremolite		
G2	22	C2	AQ	122	127	F	7	1.1	6.4	Tremolite		
G2	29	D4	AQ	153	159	F	10	0.7	14.3	Tremolite		
G2	33	E7	AQ	184	194	F	30	0.85	35.3	Tremolite		
G2	21	A2	AQ		119	MF	6	0.8	7.5	Tremolite		
G2	21	A2	AQ		123	MF	9.2	0.55	16.7	Tremolite		
G2	21	A2	AQ	119	124	F	10.2	0.5	20.4	Tremolite		
G2	23	E2	AQ	123	128	F	5.25	0.55	9.5	Tremolite		
G2	24	G2	AQ		134	CF	9	0.8	11.2	Tremolite		
G2	24	G2	AQ	129	135	F	10	1.2	8.3	Tremolite		
G2	26	J4	AQ		140	MF	20	2.2	9.1	Tremolite		
G2	26	J4	AQ	138	144	F	9.5	1.8	5.3	Tremolite		
G2	28	F4	AQ	147	153	F	20	1.2	16.7	Tremolite		
G2	21	A2	AQ	112	117	F	23.5	3	7.8	Tremolite		
G2	26	J4	AQ	139	145	F	7	0.5	14	Tremolite		
G2	29	D4	AQ		160	MF	6	0.65	9.2	Tremolite		
G2	29	D4	AQ		158	MF	9.5	0.85	11.2	Tremolite		
G2	29	D4	AQ		162	MF	20.2	0.45	44.9	Tremolite		
G2	27	H4	AQ	146	152	B	8	2	4	Tremolite		
G2	27	H4	AQ	145	151	F	7.75	0.8	9.7	Tremolite		
G2	27	H4	AQ	144	150	F	5.6	0.7	8	Tremolite		
G2	27	H4	AQ	143	149	F	13.5	1.2	11.2	Tremolite		
G2	26	J4	AQ	141	147	F	17	2	8.5	Tremolite		
G2	26	J4	AQ	140	146	F	10	1.25	8	Tremolite		

Lab/Cor, Inc.
7619 6th Ave Nw
Seattle, WA 98117

Phone: (206) 781-0155
Fax: (206) 789-8424
http://www.labcor.net

A Professional Service Corporation in the Northwest

ISO 10312, Direct Count Categories

Job Number: 070434 **SEA** **Report Number:** 070434R06
Client: Idaho National Laboratory **Date Received:** 4/23/2007
Project Name: RARE

Lab/Cor Sample No.: S27
Client Sample No.: FB-2-R2
Description:
Filter Fraction: 1 **Aliquot Dilution:** 0
Residual Ash Vol: **Final Dilution:** 0

Volume (L): 0
Lab Filter Area (mm2): 385
Grid Openings Analyzed: 35
Average Grid Opening Area: 0.009
Area Analyzed (mm2): 0.315
Analytical Sens. (struc/cc): 0
Dectection Limit. (struc/cc): 0

Structure Type	Filter Density (s/mm2)	Concen-tration (struc/cc)	95% Confidence Interval (struc/cc)	Structure Count[1] Prim/Total
PCM Equivalent Fibers-ISO		Not Applicable	Not Applicable	94

Gr	No.	Loc.	ID	Prim	Tot	Class	Len	Wid	Asp	Analyte	Elements	Comment
G1	17	H9	AX	74	80	F	17	1.7	10	Tremolite		
G1	16	J9	AX	63	69	F	16.85	1.65	10.2	Tremolite		
G1	17	H9	AX	68	74	F	17.5	1.45	12.1	Tremolite		
G1	17	H9	AX		77	MF	5.12	0.5	10.2	Tremolite		
G1	16	J9	AX	64	70	F	7	1.5	4.7	Tremolite		
G1	17	H9	AX	72	78	F	14.25	1.7	8.4	Tremolite		
G1	15	I7	AX	60	66	F	12	1.8	6.7	Tremolite		
G1	15	I7	AX	59	65	F	11.35	2	5.7	Tremolite		
G1	15	I7	AX	58	64	F	12	0.8	15	Tremolite		
G1	14	G7	AX	56	62	F	6.5	1.75	3.7	Tremolite		
G1	12	C7	AX	51	57	F	24	1.5	16	Tremolite		
G1	18	F9	AX		84	MF	12	1.7	7.1	Tremolite		
G1	20	B9	AX	91	98	F	6	0.5	12	Tremolite		
G1	13	E7	AX		58	MF	10	1.5	6.7	Tremolite		
G1	18	F9	AX		85	MF	14	0.5	28	Tremolite		
G1	18	F9	AX		86	MF	14	1	14	Tremolite		
G1	18	F9	AX	75	81	F	15	0.38	39.5	Tremolite		
G1	18	F9	AX	76	82	B	32.5	1.15	28.3	Tremolite		
G1	19	D9	AX		87	MF	13.4	2	6.7	Tremolite		
G1	19	D9	AX		88	MF	5.5	0.6	9.2	Tremolite		
G1	19	D9	AX		89	MF	16	0.65	24.6	Tremolite		
G1	19	D9	AX	84	91	F	15.3	2	7.7	Tremolite		
G1	19	D9	AX	87	94	F	5.2	0.8	6.5	Tremolite		
G1	19	D9	AX	88	95	F	5.7	1.45	3.9	Tremolite		
G1	12	C7	AX		55	CF	8.2	1.85	4.4	Tremolite		
G1	20	B9	AX	90	97	F	6.35	2	3.2	Tremolite		
G1	11	A7	AX	42	46	F	6.5	1.8	3.6	Tremolite		
G1	20	B9	AX	89	96	F	10.4	1.5	6.9	Tremolite		
G1	3	E2	AX	10	10	F	6.2	1.75	3.5	Tremolite		
G1	1	A2	ADQ		1	MF	8.7	0.75	11.6	Tremolite		
G1	1	A2	AQ	3	3	F	22	3	7.3	Tremolite	Mg, Al, Si, Ca, Fe	
G1	2	C2	AX	6	6	F	7.85	1.15	6.8	Tremolite		
G1	12	C7	AX		53	MF	9	0.8	11.2	Tremolite		
G1	3	E2	AX		12	MF	15.25	1.7	9	Tremolite		

Lab/Cor, Inc.
7619 6th Ave Nw
Seattle, WA 98117

Phone: (206) 781-0155
Fax: (206) 789-8424
http://www.labcor.net

A Professional Service Corporation in the Northwest

ISO 10312, Direct Count Categories

Job Number: 070434 **SEA**
Report Number: 070434R06
Client: Idaho National Laboratory
Date Received: 4/23/2007
Project Name: RARE

Lab/Cor Sample No.: S27
Client Sample No.: FB-2-R2
Description:
Filter Fraction: 1
Residual Ash Vol:
Aliquot Dilution: 0
Final Dilution: 0
Volume (L): 0
Lab Filter Area (mm2): 385
Grid Openings Analyzed: 35
Average Grid Opening Area: 0.009
Area Analyzed (mm2): 0.315
Analytical Sens. (struc/cc): 0
Dectection Limit. (struc/cc): 0

Structure Type	Filter Density (s/mm2)	Concen-tration (struc/cc)	95% Confidence Interval (struc/cc)	Structure Count[1] Prim/Total
PCM Equivalent Fibers-ISO		Not Applicable	Not Applicable	94

Gr	No.	Loc.	ID	Prim	Tot	Class	Len	Wid	Asp	Analyte	Elements	Comment
G1	3	E2	AX	11	11	F	9	1.2	7.5	Tremolite		
G1	4	G2	AX	13	14	F	5.8	1.7	3.4	Tremolite		
G1	5	I2	AX		25	MF	5.2	1.2	4.3	Tremolite		
G1	5	I2	AX	17	20	F	6.5	1.5	4.3	Tremolite		
G1	5	I2	AX	19	22	F	6.5	0.37	17.6	Tremolite		
G1	5	I2	AX	20	23	F	8.2	0.55	14.9	Tremolite		
G1	5	I2	AX	23	26	F	11.35	2.15	5.3	Tremolite		
G1	6	J4	AX		28	MF	5.5	0.8	6.9	Tremolite		
G1	10	B4	AX	37	40	F	7.8	0.65	12	Tremolite		
G1	2	C2	AX	7	7	F	20	1.75	11.4	Tremolite		
G1	6	J4	AX	27	30	F	7.7	0.75	10.3	Tremolite		
G1	11	A7	AX	46	50	F	5.85	1.2	4.9	Tremolite		
G1	11	A7	AX		49	MF	6.5	0.85	7.6	Tremolite		
G1	10	B4	AX	36	39	F	13.4	1.35	9.9	Tremolite		
G1	10	B4	AX		44	MF	5.5	0.75	7.3	Tremolite		
G1	7	H4	AX	30	33	F	5.7	0.85	6.7	Tremolite		
G1	9	D4	AX	34	37	F	6	0.35	17.1	Tremolite		
G1	8	F4	AX	33	36	F	10.7	1.2	8.9	Tremolite		
G1	8	F4	AX	32	35	F	10.75	1.2	9	Tremolite		
G1	10	B4	AX		41	MF	8.35	0.35	23.9	Tremolite		
G1	6	J4	AX	28	31	F	5.25	1.75	3	Tremolite		
G2	30	B4	AX	141	149	F	9.2	1.2	7.7	Tremolite		
G2	29	D4	AX	139	147	F	10.3	1	10.3	Tremolite		
G2	29	D4	AX	136	144	F	38	1.5	25.3	Tremolite		
G2	29	D4	AX	134	142	F	10	2.1	4.8	Tremolite		
G2	29	D4	AX		143	MF	5.85	0.5	11.7	Tremolite		
G2	29	D4	AX		145	MF	13	0.7	18.6	Tremolite		
G2	30	B4	AX	142	150	F	14	1.7	8.2	Tremolite		
G2	35	I7	AX	155	163	F	5.5	0.6	9.2	Tremolite		
G2	28	F4	AX	132	140	F	25	0.7	35.7	Tremolite		
G2	29	D4	AX	133	141	F	48.5	1.85	26.2	Tremolite		
G2	31	A7	AX	143	151	F	5.6	0.7	8	Tremolite		
G2	31	A7	AX	144	152	F	7.5	0.75	10	Tremolite		
G2	31	A7	AX	146	154	F	15.7	2	7.8	Tremolite		

Lab/Cor, Inc.
7619 6th Ave Nw
Seattle, WA 98117

Phone: (206) 781-0155
Fax: (206) 789-8424
http://www.labcor.net

A Professional Service Corporation in the Northwest

ISO 10312, Direct Count Categories

Job Number: 070434 **SEA** **Report Number:** 070434R06
Client: Idaho National Laboratory **Date Received:** 4/23/2007
Project Name: RARE

Lab/Cor Sample No.: S27
Client Sample No.: FB-2-R2
Description:
Filter Fraction: 1 **Aliquot Dilution:** 0
Residual Ash Vol: **Final Dilution:** 0

Volume (L): 0
Lab Filter Area (mm2): 385
Grid Openings Analyzed: 35
Average Grid Opening Area: 0.009
Area Analyzed (mm2): 0.315
Analytical Sens. (struc/cc): 0
Dectection Limit. (struc/cc): 0

Structure Type	Filter Density (s/mm2)	Concen-tration (struc/cc)	95% Confidence Interval (struc/cc)	Structure Count[1] Prim/Total
PCM Equivalent Fibers-ISO		Not Applicable	Not Applicable	94

Gr	No.	Loc.	ID	Prim	Tot	Class	Len	Wid	Asp	Analyte	Elements	Comment
G2	31	A7	AX	147	155	F	5.65	0.6	9.4	Tremolite		
G2	32	C7	AX	148	156	F	8.4	0.55	15.3	Tremolite		
G2	33	E7	AX	153	161	F	17.5	2.25	7.8	Tremolite		
G2	35	I7	AX	157	166	F	8.4	0.65	12.9	Tremolite		
G2	23	E2	AX	107	114	F	18.63	0.75	24.8	Tremolite		
G2	27	H4	AX	128	135	F	7.75	2.5	3.1	Tremolite		
G2	33	E7	AX	150	158	F	7.8	0.8	9.8	Tremolite		
G2	23	E2	AX	104	111	F	5.2	0.55	9.5	Tremolite		
G2	27	H4	AX		136	MF	12.5	0.85	14.7	Tremolite		
G2	21	A2	AX	96	103	F	8	0.6	13.3	Tremolite		
G2	22	C2	AX	98	105	F	17	2	8.5	Tremolite		
G2	22	C2	AX	100	107	F	27.5	2	13.8	Tremolite		
G2	22	C2	AX	103	110	F	6	2	3	Tremolite		
G2	21	A2	AX	95	102	F	7.8	1.5	5.2	Tremolite		
G2	24	G2	AX	113	120	F	14.52	2.5	5.8	Tremolite		
G2	24	G2	AX	110	117	F	11.2	1.2	9.3	Tremolite		
G2	25	I2	AX	122	129	F	18.5	1.1	16.8	Tremolite		
G2	24	G2	AX	114	121	F	17	1.75	9.7	Tremolite		
G2	24	G2	AX	115	122	F	13.2	3	4.4	Tremolite		
G2	25	I2	AX	116	123	F	25	0.65	38.5	Tremolite		
G2	25	I2	AX	117	124	F	10	1.2	8.3	Tremolite		
G2	25	I2	AX	119	126	F	22	1	22	Tremolite		
G2	25	I2	AX	120	127	F	9.2	0.55	16.7	Tremolite		
G2	21	A2	AX	93	100	F	12	2.7	4.4	Tremolite		
G2	22	C2	AX	101	108	F	19.5	1.75	11.1	Tremolite		
G2	26	J4	AX	126	133	F	6.5	0.45	14.4	Tremolite		

PCM Equivalent Structures-ISO	238.1	Not Applicable	Not Applicable	75	

Gr	No.	Loc.	ID	Prim	Tot	Class	Len	Wid	Asp	Analyte	Elements	Comment
G1	17	H9	AX	68	74	F	17.5	1.45	12.1	Tremolite		
G1	16	J9	AX	64	70	F	7	1.5	4.7	Tremolite		
G1	16	J9	AX	63	69	F	16.85	1.65	10.2	Tremolite		
G1	15	I7	AX	60	66	F	12	1.8	6.7	Tremolite		
G1	15	I7	AX	59	65	F	11.35	2	5.7	Tremolite		
G1	14	G7	AX	56	62	F	6.5	1.75	3.7	Tremolite		

Lab/Cor, Inc.
7619 6th Ave Nw
Seattle, WA 98117

Phone: (206) 781-0155
Fax: (206) 789-8424
http://www.labcor.net

A Professional Service Corporation in the Northwest

ISO 10312, Direct Count Categories

Job Number: 070434 **SEA** **Report Number:** 070434R06
Client: Idaho National Laboratory **Date Received:** 4/23/2007
Project Name: RARE

Lab/Cor Sample No.: S27
Client Sample No.: FB-2-R2
Description:
Filter Fraction: 1 **Aliquot Dilution:** 0
Residual Ash Vol: **Final Dilution:** 0

Volume (L): 0
Lab Filter Area (mm2): 385
Grid Openings Analyzed: 35
Average Grid Opening Area: 0.009
Area Analyzed (mm2): 0.315
Analytical Sens. (struc/cc): 0
Dectection Limit. (struc/cc): 0

Structure Type	Filter Density (s/mm2)	Concen-tration (struc/cc)	95% Confidence Interval (struc/cc)	Structure Count[1] Prim/Total
PCM Equivalent Structures-ISO	238.1	Not Applicable	Not Applicable	75

Gr	No.	Loc.	ID	Prim	Tot	Class	Len	Wid	Asp	Analyte	Elements	Comment
G1	17	H9	AX	72	78	F	14.25	1.7	8.4	Tremolite		
G1	15	I7	AX	58	64	F	12	0.8	15	Tremolite		
G1	17	H9	AX	74	80	F	17	1.7	10	Tremolite		
G1	18	F9	AX	75	81	F	15	0.38	39.5	Tremolite		
G1	18	F9	AX	76	82	B	32.5	1.15	28.3	Tremolite		
G1	19	D9	AX	81		MD 1-1	10.5	2.5	4.2	Tremolite		
G1	19	D9	AX	84	91	F	15.3	2	7.7	Tremolite		
G1	19	D9	AX	87	94	F	5.2	0.8	6.5	Tremolite		
G1	19	D9	AX	88	95	F	5.7	1.45	3.9	Tremolite		
G1	20	B9	AX	90	97	F	6.35	2	3.2	Tremolite		
G1	11	A7	AX	42	46	F	6.5	1.8	3.6	Tremolite		
G1	20	B9	AX	91	98	F	6	0.5	12	Tremolite		
G1	20	B9	AX	89	96	F	10.4	1.5	6.9	Tremolite		
G1	4	G2	AX	13	14	F	5.8	1.7	3.4	Tremolite		
G1	12	C7	AX	51	57	F	24	1.5	16	Tremolite		
G1	11	A7	AX	46	50	F	5.85	1.2	4.9	Tremolite		
G1	2	C2	AX	6	6	F	7.85	1.15	6.8	Tremolite		
G1	2	C2	AX	7	7	F	20	1.75	11.4	Tremolite		
G1	3	E2	AX	11	11	F	9	1.2	7.5	Tremolite		
G1	1	A2	AQ	3	3	F	22	3	7.3	Tremolite	Mg, Al, Si, Ca, Fe	
G1	5	I2	AX	17	20	F	6.5	1.5	4.3	Tremolite		
G1	5	I2	AX	19	22	F	6.5	0.37	17.6	Tremolite		
G1	5	I2	AX	20	23	F	8.2	0.55	14.9	Tremolite		
G1	10	B4	AX	36	39	F	13.4	1.35	9.9	Tremolite		
G1	3	E2	AX	10	10	F	6.2	1.75	3.5	Tremolite		
G1	10	B4	AX	37	40	F	7.8	0.65	12	Tremolite		
G1	5	I2	AX	23	26	F	11.35	2.15	5.3	Tremolite		
G1	9	D4	AX	34	37	F	6	0.35	17.1	Tremolite		
G1	8	F4	AX	33	36	F	10.7	1.2	8.9	Tremolite		
G1	8	F4	AX	32	35	F	10.75	1.2	9	Tremolite		
G1	7	H4	AX	30	33	F	5.7	0.85	6.7	Tremolite		
G1	6	J4	AX	28	31	F	5.25	1.75	3	Tremolite		
G1	6	J4	AX	27	30	F	7.7	0.75	10.3	Tremolite		
G2	30	B4	AX	141	149	F	9.2	1.2	7.7	Tremolite		

Lab/Cor, Inc.
7619 6th Ave Nw
Seattle, WA 98117

Phone: (206) 781-0155
Fax: (206) 789-8424
http://www.labcor.net

A Professional Service Corporation in the Northwest

ISO 10312, Direct Count Categories

Job Number: 070434 **SEA** **Report Number:** 070434R06
Client: Idaho National Laboratory **Date Received:** 4/23/2007
Project Name: RARE

Lab/Cor Sample No.: S27
Client Sample No.: FB-2-R2
Description:
Filter Fraction: 1 **Aliquot Dilution:** 0
Residual Ash Vol: **Final Dilution:** 0

Volume (L): 0
Lab Filter Area (mm2): 385
Grid Openings Analyzed: 35
Average Grid Opening Area: 0.009
Area Analyzed (mm2): 0.315
Analytical Sens. (struc/cc): 0
Dectection Limit. (struc/cc): 0

Structure Type	Filter Density (s/mm2)	Concen-tration (struc/cc)	95% Confidence Interval (struc/cc)	Structure Count[1] Prim/Total
PCM Equivalent Structures-ISO	238.1	Not Applicable	Not Applicable	75

Gr	No.	Loc.	ID	Prim	Tot	Class	Len	Wid	Asp	Analyte	Elements	Comment
G2	29	D4	AX	133	141	F	48.5	1.85	26.2	Tremolite		
G2	29	D4	AX	134	142	F	10	2.1	4.8	Tremolite		
G2	29	D4	AX	136	144	F	38	1.5	25.3	Tremolite		
G2	35	I7	AX	157	166	F	8.4	0.65	12.9	Tremolite		
G2	29	D4	AX	139	147	F	10.3	1	10.3	Tremolite		
G2	27	H4	AX	128	135	F	7.75	2.5	3.1	Tremolite		
G2	28	F4	AX	132	140	F	25	0.7	35.7	Tremolite		
G2	30	B4	AX	142	150	F	14	1.7	8.2	Tremolite		
G2	31	A7	AX	143	151	F	5.6	0.7	8	Tremolite		
G2	31	A7	AX	144	152	F	7.5	0.75	10	Tremolite		
G2	31	A7	AX	146	154	F	15.7	2	7.8	Tremolite		
G2	31	A7	AX	147	155	F	5.65	0.6	9.4	Tremolite		
G2	32	C7	AX	148	156	F	8.4	0.55	15.3	Tremolite		
G2	33	E7	AX	150	158	F	7.8	0.8	9.8	Tremolite		
G2	33	E7	AX	153	161	F	17.5	2.25	7.8	Tremolite		
G2	24	G2	AX	113	120	F	14.52	2.5	5.8	Tremolite		
G2	35	I7	AX	155	163	F	5.5	0.6	9.2	Tremolite		
G2	21	A2	AX	95	102	F	7.8	1.5	5.2	Tremolite		
G2	26	J4	AX	126	133	F	6.5	0.45	14.4	Tremolite		
G2	21	A2	AX	93	100	F	12	2.7	4.4	Tremolite		
G2	21	A2	AX	96	103	F	8	0.6	13.3	Tremolite		
G2	22	C2	AX	98	105	F	17	2	8.5	Tremolite		
G2	22	C2	AX	100	107	F	27.5	2	13.8	Tremolite		
G2	22	C2	AX	101	108	F	19.5	1.75	11.1	Tremolite		
G2	22	C2	AX	103	110	F	6	2	3	Tremolite		
G2	23	E2	AX	104	111	F	5.2	0.55	9.5	Tremolite		
G2	25	I2	AX	120	127	F	9.2	0.55	16.7	Tremolite		
G2	24	G2	AX	115	122	F	13.2	3	4.4	Tremolite		
G2	23	E2	AX	107	114	F	18.63	0.75	24.8	Tremolite		
G2	25	I2	AX	122	129	F	18.5	1.1	16.8	Tremolite		
G2	25	I2	AX	119	126	F	22	1	22	Tremolite		
G2	25	I2	AX	117	124	F	10	1.2	8.3	Tremolite		
G2	25	I2	AX	116	123	F	25	0.65	38.5	Tremolite		
G2	24	G2	AX	114	121	F	17	1.75	9.7	Tremolite		

Lab/Cor, Inc.
7619 6th Ave Nw
Seattle, WA 98117

Phone: (206) 781-0155
Fax: (206) 789-8424
http://www.labcor.net

A Professional Service Corporation in the Northwest

ISO 10312, Direct Count Categories

Job Number: 070434 **SEA** **Report Number:** 070434R06
Client: Idaho National Laboratory **Date Received:** 4/23/2007
Project Name: RARE

Lab/Cor Sample No.: S27
Client Sample No.: FB-2-R2
Description:
Filter Fraction: 1
Residual Ash Vol:
Aliquot Dilution: 0
Final Dilution: 0
Volume (L): 0
Lab Filter Area (mm2): 385
Grid Openings Analyzed: 35
Average Grid Opening Area: 0.009
Area Analyzed (mm2): 0.315
Analytical Sens. (struc/cc): 0
Dectection Limit. (struc/cc): 0

Structure Type	Filter Density (s/mm2)	Concen-tration (struc/cc)	95% Confidence Interval (struc/cc)	Structure Count[1] Prim/Total
PCM Equivalent Structures-ISO	238.1	Not Applicable	Not Applicable	75

Gr	No.	Loc.	ID	Prim	Tot	Class	Len	Wid	Asp	Analyte	Elements	Comment
G2	24	G2	AX	110	117	F	11.2	1.2	9.3	Tremolite		

PCM Equivalent Fibers-NIOSH		Not Applicable	Not Applicable	101

Gr	No.	Loc.	ID	Prim	Tot	Class	Len	Wid	Asp	Analyte	Elements	Comment
G1	17	H9	AX	74	80	F	17	1.7	10	Tremolite		
G1	12	C7	AX	51	57	F	24	1.5	16	Tremolite		
G1	16	J9	AX	64	70	F	7	1.5	4.7	Tremolite		
G1	17	H9	AX	69	75	F	16	4	4	Tremolite		
G1	17	H9	AX	68	74	F	17.5	1.45	12.1	Tremolite		
G1	17	H9	AX		77	MF	5.12	0.5	10.2	Tremolite		
G1	17	H9	AX	72	78	F	14.25	1.7	8.4	Tremolite		
G1	16	J9	AX	63	69	F	16.85	1.65	10.2	Tremolite		
G1	15	I7	AX	60	66	F	12	1.8	6.7	Tremolite		
G1	15	I7	AX	59	65	F	11.35	2	5.7	Tremolite		
G1	14	G7	AX	56	62	F	6.5	1.75	3.7	Tremolite		
G1	18	F9	AX		84	MF	12	1.7	7.1	Tremolite		
G1	19	D9	AX	88	95	F	5.7	1.45	3.9	Tremolite		
G1	15	I7	AX	58	64	F	12	0.8	15	Tremolite		
G1	18	F9	AX		85	MF	14	0.5	28	Tremolite		
G1	18	F9	AX		86	MF	14	1	14	Tremolite		
G1	18	F9	AX	75	81	F	15	0.38	39.5	Tremolite		
G1	18	F9	AX	76	82	B	32.5	1.15	28.3	Tremolite		
G1	19	D9	AX		87	MF	13.4	2	6.7	Tremolite		
G1	19	D9	AX		88	MF	5.5	0.6	9.2	Tremolite		
G1	19	D9	AX		89	MF	16	0.65	24.6	Tremolite		
G1	12	C7	AX		53	MF	9	0.8	11.2	Tremolite		
G1	19	D9	AX	87	94	F	5.2	0.8	6.5	Tremolite		
G1	12	C7	AX		55	CF	8.2	1.85	4.4	Tremolite		
G1	20	B9	AX	89	96	F	10.4	1.5	6.9	Tremolite		
G1	20	B9	AX	90	97	F	6.35	2	3.2	Tremolite		
G1	20	B9	AX	91	98	F	6	0.5	12	Tremolite		
G1	19	D9	AX	84	91	F	15.3	2	7.7	Tremolite		
G1	3	E2	AX		12	MF	15.25	1.7	9	Tremolite		
G1	1	A2	ADQ		1	MF	8.7	0.75	11.6	Tremolite		
G1	1	A2	AQ	3	3	F	22	3	7.3	Tremolite	Mg, Al, Si, Ca, Fe	

Lab/Cor, Inc.
7619 6th Ave Nw
Seattle, WA 98117

Phone: (206) 781-0155
Fax: (206) 789-8424
http://www.labcor.net

A Professional Service Corporation in the Northwest

ISO 10312, Direct Count Categories

Job Number: 070434 **SEA**
Client: Idaho National Laboratory
Project Name: RARE

Report Number: 070434R06
Date Received: 4/23/2007

Lab/Cor Sample No.: S27
Client Sample No.: FB-2-R2
Description:
Filter Fraction: 1
Residual Ash Vol:

Aliquot Dilution: 0
Final Dilution: 0

Volume (L): 0
Lab Filter Area (mm2): 385
Grid Openings Analyzed: 35
Average Grid Opening Area: 0.009
Area Analyzed (mm2): 0.315
Analytical Sens. (struc/cc): 0
Dectection Limit. (struc/cc): 0

Structure Type	Filter Density (s/mm2)	Concen-tration (struc/cc)	95% Confidence Interval (struc/cc)	Structure Count[1] Prim/Total
PCM Equivalent Fibers-NIOSH		Not Applicable	Not Applicable	101

Gr	No.	Loc.	ID	Prim	Tot	Class	Len	Wid	Asp	Analyte	Elements	Comment
G1	2	C2	AX	5	5	F	40	3.75	10.7	Tremolite		
G1	13	E7	AX		58	MF	10	1.5	6.7	Tremolite		
G1	2	C2	AX	7	7	F	20	1.75	11.4	Tremolite		
G1	11	A7	AX	46	50	F	5.85	1.2	4.9	Tremolite		
G1	3	E2	AX	10	10	F	6.2	1.75	3.5	Tremolite		
G1	3	E2	AX	11	11	F	9	1.2	7.5	Tremolite		
G1	4	G2	AX	13	14	F	5.8	1.7	3.4	Tremolite		
G1	5	I2	AX		25	MF	5.2	1.2	4.3	Tremolite		
G1	5	I2	AX	17	20	F	6.5	1.5	4.3	Tremolite		
G1	5	I2	AX	19	22	F	6.5	0.37	17.6	Tremolite		
G1	5	I2	AX	20	23	F	8.2	0.55	14.9	Tremolite		
G1	5	I2	AX	23	26	F	11.35	2.15	5.3	Tremolite		
G1	11	A7	AX		49	MF	6.5	0.85	7.6	Tremolite		
G1	2	C2	AX	6	6	F	7.85	1.15	6.8	Tremolite		
G1	6	J4	AX		28	MF	5.5	0.8	6.9	Tremolite		
G1	11	A7	AX	42	46	F	6.5	1.8	3.6	Tremolite		
G1	10	B4	AX	37	40	F	7.8	0.65	12	Tremolite		
G1	10	B4	AX	36	39	F	13.4	1.35	9.9	Tremolite		
G1	10	B4	AX		44	MF	5.5	0.75	7.3	Tremolite		
G1	6	J4	AX	28	31	F	5.25	1.75	3	Tremolite		
G1	9	D4	AX	34	37	F	6	0.35	17.1	Tremolite		
G1	8	F4	AX	33	36	F	10.7	1.2	8.9	Tremolite		
G1	8	F4	AX	32	35	F	10.75	1.2	9	Tremolite		
G1	7	H4	AX	30	33	F	5.7	0.85	6.7	Tremolite		
G1	10	B4	AX		41	MF	8.35	0.35	23.9	Tremolite		
G1	6	J4	AX	27	30	F	7.7	0.75	10.3	Tremolite		
G2	30	B4	AX	141	149	F	9.2	1.2	7.7	Tremolite		
G2	29	D4	AX	139	147	F	10.3	1	10.3	Tremolite		
G2	29	D4	AX	136	144	F	38	1.5	25.3	Tremolite		
G2	29	D4	AX	134	142	F	10	2.1	4.8	Tremolite		
G2	29	D4	AX	133	141	F	48.5	1.85	26.2	Tremolite		
G2	27	H4	AX	128	135	F	7.75	2.5	3.1	Tremolite		
G2	29	D4	AX		143	MF	5.85	0.5	11.7	Tremolite		
G2	28	F4	AX	132	140	F	25	0.7	35.7	Tremolite		

Lab/Cor, Inc.
7619 6th Ave Nw
Seattle, WA 98117

Phone: (206) 781-0155
Fax: (206) 789-8424
http://www.labcor.net

A Professional Service Corporation in the Northwest

ISO 10312, Direct Count Categories

Job Number: 070434 **SEA** **Report Number:** 070434R06
Client: Idaho National Laboratory **Date Received:** 4/23/2007
Project Name: RARE

Lab/Cor Sample No.: S27
Client Sample No.: FB-2-R2
Description:
Filter Fraction: 1 **Aliquot Dilution:** 0
Residual Ash Vol: **Final Dilution:** 0

Volume (L): 0
Lab Filter Area (mm2): 385
Grid Openings Analyzed: 35
Average Grid Opening Area: 0.009
Area Analyzed (mm2): 0.315
Analytical Sens. (struc/cc): 0
Dectection Limit. (struc/cc): 0

Structure Type	Filter Density (s/mm2)	Concen-tration (struc/cc)	95% Confidence Interval (struc/cc)	Structure Count[1] Prim/Total
PCM Equivalent Fibers-NIOSH		Not Applicable	Not Applicable	101

Gr	No.	Loc.	ID	Prim	Tot	Class	Len	Wid	Asp	Analyte	Elements	Comment
G2	30	B4	AX	142	150	F	14	1.7	8.2	Tremolite		
G2	33	E7	AX	150	158	F	7.8	0.8	9.8	Tremolite		
G2	29	D4	AX		145	MF	13	0.7	18.6	Tremolite		
G2	31	A7	AX	143	151	F	5.6	0.7	8	Tremolite		
G2	31	A7	AX	144	152	F	7.5	0.75	10	Tremolite		
G2	31	A7	AX	146	154	F	15.7	2	7.8	Tremolite		
G2	31	A7	AX	147	155	F	5.65	0.6	9.4	Tremolite		
G2	35	I7	AX	157	166	F	8.4	0.65	12.9	Tremolite		
G2	22	C2	AX	99	106	F	27	4	6.8	Tremolite		
G2	33	E7	AX	151	159	F	16	3.75	4.3	Tremolite		
G2	33	E7	AX	153	161	F	17.5	2.25	7.8	Tremolite		
G2	35	I7	AX	155	163	F	5.5	0.6	9.2	Tremolite		
G2	27	H4	AX		136	MF	12.5	0.85	14.7	Tremolite		
G2	32	C7	AX	148	156	F	8.4	0.55	15.3	Tremolite		
G2	22	C2	AX	103	110	F	6	2	3	Tremolite		
G2	22	C2	AX	101	108	F	19.5	1.75	11.1	Tremolite		
G2	21	A2	AX	95	102	F	7.8	1.5	5.2	Tremolite		
G2	21	A2	AX	96	103	F	8	0.6	13.3	Tremolite		
G2	22	C2	AX	98	105	F	17	2	8.5	Tremolite		
G2	26	J4	AX	126	133	F	6.5	0.45	14.4	Tremolite		
G2	22	C2	AX	102	109	F	24.75	4.5	5.5	Tremolite		
G2	21	A2	AX	93	100	F	12	2.7	4.4	Tremolite		
G2	23	E2	AX	104	111	F	5.2	0.55	9.5	Tremolite		
G2	23	E2	AX	107	114	F	18.63	0.75	24.8	Tremolite		
G2	24	G2	AX	110	117	F	11.2	1.2	9.3	Tremolite		
G2	24	G2	AX	113	120	F	14.52	2.5	5.8	Tremolite		
G2	24	G2	AX	114	121	F	17	1.75	9.7	Tremolite		
G2	24	G2	AX	115	122	F	13.2	3	4.4	Tremolite		
G2	25	I2	AX	116	123	F	25	0.65	38.5	Tremolite		
G2	25	I2	AX	117	124	F	10	1.2	8.3	Tremolite		
G2	25	I2	AX	119	126	F	22	1	22	Tremolite		
G2	25	I2	AX	120	127	F	9.2	0.55	16.7	Tremolite		
G2	25	I2	AX	121	128	F	12.2	3.2	3.8	Tremolite		
G2	24	G2	AX	111	118	F	26	3.25	8	Tremolite		

Lab/Cor, Inc.
7619 6th Ave Nw
Seattle, WA 98117

Phone: (206) 781-0155
Fax: (206) 789-8424
http://www.labcor.net

A Professional Service Corporation in the Northwest

ISO 10312, Direct Count Categories

Job Number: 070434 **SEA** **Report Number:** 070434R06
Client: Idaho National Laboratory **Date Received:** 4/23/2007
Project Name: RARE

Lab/Cor Sample No.: S27
Client Sample No.: FB-2-R2
Description:
Filter Fraction: 1 **Aliquot Dilution:** 0
Residual Ash Vol: **Final Dilution:** 0

Volume (L): 0
Lab Filter Area (mm2): 385
Grid Openings Analyzed: 35
Average Grid Opening Area: 0.009
Area Analyzed (mm2): 0.315
Analytical Sens. (struc/cc): 0
Dectection Limit. (struc/cc): 0

Structure Type	Filter Density (s/mm2)	Concen-tration (struc/cc)	95% Confidence Interval (struc/cc)	Structure Count[1] Prim/Total
PCM Equivalent Fibers-NIOSH		Not Applicable	Not Applicable	101

Gr	No.	Loc.	ID	Prim	Tot	Class	Len	Wid	Asp	Analyte	Elements	Comment
G2	22	C2	AX	100	107	F	27.5	2	13.8	Tremolite		
G2	25	I2	AX	122	129	F	18.5	1.1	16.8	Tremolite		

PCM Equivalent Structures-NIOSH	269.8	Not Applicable	Not Applicable	85	

Gr	No.	Loc.	ID	Prim	Tot	Class	Len	Wid	Asp	Analyte	Elements	Comment
G1	13	E7	AX	52		MD 1-1	17.5	5	3.5	Tremolite		
G1	17	H9	AX	69	75	F	16	4	4	Tremolite		
G1	17	H9	AX	68	74	F	17.5	1.45	12.1	Tremolite		
G1	16	J9	AX	64	70	F	7	1.5	4.7	Tremolite		
G1	16	J9	AX	63	69	F	16.85	1.65	10.2	Tremolite		
G1	15	I7	AX	60	66	F	12	1.8	6.7	Tremolite		
G1	15	I7	AX	59	65	F	11.35	2	5.7	Tremolite		
G1	14	G7	AX	56	62	F	6.5	1.75	3.7	Tremolite		
G1	15	I7	AX	58	64	F	12	0.8	15	Tremolite		
G1	17	H9	AX	72	78	F	14.25	1.7	8.4	Tremolite		
G1	17	H9	AX	74	80	F	17	1.7	10	Tremolite		
G1	18	F9	AX	75	81	F	15	0.38	39.5	Tremolite		
G1	18	F9	AX	76	82	B	32.5	1.15	28.3	Tremolite		
G1	18	F9	AX	78		MD 1-1	16	4.5	3.6	Tremolite		
G1	19	D9	AX	80		MD 1-1	23	4.5	5.1	Tremolite		
G1	19	D9	AX	81		MD 1-1	10.5	2.5	4.2	Tremolite		
G1	19	D9	AX	84	91	F	15.3	2	7.7	Tremolite		
G1	12	C7	AX	51	57	F	24	1.5	16	Tremolite		
G1	19	D9	AX	88	95	F	5.7	1.45	3.9	Tremolite		
G1	5	I2	AX	20	23	F	8.2	0.55	14.9	Tremolite		
G1	19	D9	AX	87	94	F	5.2	0.8	6.5	Tremolite		
G1	5	I2	AX	23	26	F	11.35	2.15	5.3	Tremolite		
G1	20	B9	AX	89	96	F	10.4	1.5	6.9	Tremolite		
G1	1	A2	AQ	3	3	F	22	3	7.3	Tremolite	Mg, Al, Si, Ca, Fe	
G1	2	C2	AX	5	5	F	40	3.75	10.7	Tremolite		
G1	2	C2	AX	6	6	F	7.85	1.15	6.8	Tremolite		
G1	2	C2	AX	7	7	F	20	1.75	11.4	Tremolite		
G1	3	E2	AX	10	10	F	6.2	1.75	3.5	Tremolite		
G1	3	E2	AX	11	11	F	9	1.2	7.5	Tremolite		
G1	4	G2	AX	13	14	F	5.8	1.7	3.4	Tremolite		

Lab/Cor, Inc.
7619 6th Ave Nw
Seattle, WA 98117

Phone: (206) 781-0155
Fax: (206) 789-8424
http://www.labcor.net

A Professional Service Corporation in the Northwest

ISO 10312, Direct Count Categories

Job Number: 070434 **SEA** **Report Number:** 070434R06
Client: Idaho National Laboratory **Date Received:** 4/23/2007
Project Name: RARE

Lab/Cor Sample No.: S27
Client Sample No.: FB-2-R2
Description:
Filter Fraction: 1 **Aliquot Dilution:** 0
Residual Ash Vol: **Final Dilution:** 0

Volume (L): 0
Lab Filter Area (mm2): 385
Grid Openings Analyzed: 35
Average Grid Opening Area: 0.009
Area Analyzed (mm2): 0.315
Analytical Sens. (struc/cc): 0
Dectection Limit. (struc/cc): 0

Structure Type	Filter Density (s/mm2)	Concen-tration (struc/cc)	95% Confidence Interval (struc/cc)	Structure Count[1] Prim/Total
PCM Equivalent Structures-NIOSH	269.8	Not Applicable	Not Applicable	85

Gr	No.	Loc.	ID	Prim	Tot	Class	Len	Wid	Asp	Analyte	Elements	Comment
G1	6	J4	AX	27	30	F	7.7	0.75	10.3	Tremolite		
G1	5	I2	AX	19	22	F	6.5	0.37	17.6	Tremolite		
G1	11	A7	AX	46	50	F	5.85	1.2	4.9	Tremolite		
G1	6	J4	AX	28	31	F	5.25	1.75	3	Tremolite		
G1	7	H4	AX	30	33	F	5.7	0.85	6.7	Tremolite		
G1	8	F4	AX	32	35	F	10.75	1.2	9	Tremolite		
G1	8	F4	AX	33	36	F	10.7	1.2	8.9	Tremolite		
G1	9	D4	AX	34	37	F	6	0.35	17.1	Tremolite		
G1	10	B4	AX	36	39	F	13.4	1.35	9.9	Tremolite		
G1	10	B4	AX	37	40	F	7.8	0.65	12	Tremolite		
G1	11	A7	AX	42	46	F	6.5	1.8	3.6	Tremolite		
G1	5	I2	AX	17	20	F	6.5	1.5	4.3	Tremolite		
G1	20	B9	AX	90	97	F	6.35	2	3.2	Tremolite		
G1	20	B9	AX	91	98	F	6	0.5	12	Tremolite		
G2	28	F4	AX	132	140	F	25	0.7	35.7	Tremolite		
G2	27	H4	AX	128	135	F	7.75	2.5	3.1	Tremolite		
G2	26	J4	AX	126	133	F	6.5	0.45	14.4	Tremolite		
G2	31	A7	AX	143	151	F	5.6	0.7	8	Tremolite		
G2	25	I2	AX	122	129	F	18.5	1.1	16.8	Tremolite		
G2	29	D4	AX	134	142	F	10	2.1	4.8	Tremolite		
G2	29	D4	AX	139	147	F	10.3	1	10.3	Tremolite		
G2	30	B4	AX	142	150	F	14	1.7	8.2	Tremolite		
G2	29	D4	AX	133	141	F	48.5	1.85	26.2	Tremolite		
G2	31	A7	AX	144	152	F	7.5	0.75	10	Tremolite		
G2	31	A7	AX	146	154	F	15.7	2	7.8	Tremolite		
G2	25	I2	AX	121	128	F	12.2	3.2	3.8	Tremolite		
G2	32	C7	AX	148	156	F	8.4	0.55	15.3	Tremolite		
G2	29	D4	AX	136	144	F	38	1.5	25.3	Tremolite		
G2	33	E7	AX	150	158	F	7.8	0.8	9.8	Tremolite		
G2	33	E7	AX	151	159	F	16	3.75	4.3	Tremolite		
G2	33	E7	AX	153	161	F	17.5	2.25	7.8	Tremolite		
G2	35	I7	AX	155	163	F	5.5	0.6	9.2	Tremolite		
G2	35	I7	AX	157	166	F	8.4	0.65	12.9	Tremolite		
G2	31	A7	AX	147	155	F	5.65	0.6	9.4	Tremolite		

Lab/Cor, Inc.
7619 6th Ave Nw
Seattle, WA 98117

Phone: (206) 781-0155
Fax: (206) 789-8424
http://www.labcor.net

A Professional Service Corporation in the Northwest

ISO 10312, Direct Count Categories

Job Number: 070434 **SEA** **Report Number:** 070434R06
Client: Idaho National Laboratory **Date Received:** 4/23/2007
Project Name: RARE

Lab/Cor Sample No.: S27
Client Sample No.: FB-2-R2
Description:
Filter Fraction: 1 **Aliquot Dilution:** 0
Residual Ash Vol: **Final Dilution:** 0

Volume (L): 0
Lab Filter Area (mm2): 385
Grid Openings Analyzed: 35
Average Grid Opening Area: 0.009
Area Analyzed (mm2): 0.315
Analytical Sens. (struc/cc): 0
Dectection Limit. (struc/cc): 0

Structure Type	Filter Density (s/mm2)	Concen-tration (struc/cc)	95% Confidence Interval (struc/cc)	Structure Count[1] Prim/Total
PCM Equivalent Structures-NIOSH	269.8	Not Applicable	Not Applicable	85

Gr	No.	Loc.	ID	Prim	Tot	Class	Len	Wid	Asp	Analyte	Elements	Comment
G2	22	C2	AX	101	108	F	19.5	1.75	11.1	Tremolite		
G2	30	B4	AX	141	149	F	9.2	1.2	7.7	Tremolite		
G2	25	I2	AX	120	127	F	9.2	0.55	16.7	Tremolite		
G2	21	A2	AX	95	102	F	7.8	1.5	5.2	Tremolite		
G2	21	A2	AX	96	103	F	8	0.6	13.3	Tremolite		
G2	22	C2	AX	98	105	F	17	2	8.5	Tremolite		
G2	22	C2	AX	100	107	F	27.5	2	13.8	Tremolite		
G2	21	A2	AX	93	100	F	12	2.7	4.4	Tremolite		
G2	22	C2	AX	102	109	F	24.75	4.5	5.5	Tremolite		
G2	22	C2	AX	103	110	F	6	2	3	Tremolite		
G2	23	E2	AX	104	111	F	5.2	0.55	9.5	Tremolite		
G2	25	I2	AX	116	123	F	25	0.65	38.5	Tremolite		
G2	25	I2	AX	119	126	F	22	1	22	Tremolite		
G2	22	C2	AX	99	106	F	27	4	6.8	Tremolite		
G2	25	I2	AX	117	124	F	10	1.2	8.3	Tremolite		
G2	23	E2	AX	107	114	F	18.63	0.75	24.8	Tremolite		
G2	24	G2	AX	115	122	F	13.2	3	4.4	Tremolite		
G2	24	G2	AX	114	121	F	17	1.75	9.7	Tremolite		
G2	24	G2	AX	113	120	F	14.52	2.5	5.8	Tremolite		
G2	24	G2	AX	111	118	F	26	3.25	8	Tremolite		
G2	24	G2	AX	110	117	F	11.2	1.2	9.3	Tremolite		

Asbestos Structures >5um and 3:1	273.0	Not Applicable	Not Applicable	86

Gr	No.	Loc.	ID	Prim	Tot	Class	Len	Wid	Asp	Analyte	Elements	Comment
G1	18	F9	AX	75	81	F	15	0.38	39.5	Tremolite		
G1	12	C7	AX	49		MD 2-1	14.5	12	1.2	Tremolite		
G1	12	C7	AX	50		CD 2-1	8.5	5	1.7	Tremolite		
G1	15	I7	AX	58	64	F	12	0.8	15	Tremolite		
G1	15	I7	AX	60	66	F	12	1.8	6.7	Tremolite		
G1	16	J9	AX	63	69	F	16.85	1.65	10.2	Tremolite		
G1	17	H9	AX	68	74	F	17.5	1.45	12.1	Tremolite		
G1	17	H9	AX	71		MD 1-1	6.25	3.8	1.6	Tremolite		
G1	17	H9	AX	72	78	F	14.25	1.7	8.4	Tremolite		
G1	17	H9	AX	74	80	F	17	1.7	10	Tremolite		
G1	12	C7	AX	51	57	F	24	1.5	16	Tremolite		

Lab/Cor, Inc.
7619 6th Ave Nw
Seattle, WA 98117

Phone: (206) 781-0155
Fax: (206) 789-8424
http://www.labcor.net

A Professional Service Corporation in the Northwest

ISO 10312, Direct Count Categories

Job Number: 070434 **SEA** **Report Number:** 070434R06
Client: Idaho National Laboratory **Date Received:** 4/23/2007
Project Name: RARE

Lab/Cor Sample No.: S27
Client Sample No.: FB-2-R2
Description:
Filter Fraction: 1 **Aliquot Dilution:** 0
Residual Ash Vol: **Final Dilution:** 0

Volume (L): 0
Lab Filter Area (mm2): 385
Grid Openings Analyzed: 35
Average Grid Opening Area: 0.009
Area Analyzed (mm2): 0.315
Analytical Sens. (struc/cc): 0
Dectection Limit. (struc/cc): 0

Structure Type	Filter Density (s/mm2)	Concen-tration (struc/cc)	95% Confidence Interval (struc/cc)	Structure Count[1] Prim/Total
Asbestos Structures >5um and 3:1	273.0	Not Applicable	Not Applicable	86

Gr	No.	Loc.	ID	Prim	Tot	Class	Len	Wid	Asp	Analyte	Elements	Comment
G1	18	F9	AX	76	82	B	32.5	1.15	28.3	Tremolite		
G1	18	F9	AX	78		MD 1-1	16	4.5	3.6	Tremolite		
G1	18	F9	AX	79		MD 1-1	23	15	1.5	Tremolite		
G1	19	D9	AX	80		MD 1-1	23	4.5	5.1	Tremolite		
G1	19	D9	AX	81		MD 1-1	10.5	2.5	4.2	Tremolite		
G1	19	D9	AX	82		MD 1-1	16	5.5	2.9	Tremolite		
G1	19	D9	AX	84	91	F	15.3	2	7.7	Tremolite		
G1	19	D9	AX	87	94	F	5.2	0.8	6.5	Tremolite		
G1	20	B9	AX	91	98	F	6	0.5	12	Tremolite		
G1	11	A7	AX	45		MD 1-1	8.5	5	1.7	Tremolite		
G1	13	E7	AX	52		MD 1-1	17.5	5	3.5	Tremolite		
G1	20	B9	AX	89	96	F	10.4	1.5	6.9	Tremolite		
G1	2	C2	AX	6	6	F	7.85	1.15	6.8	Tremolite		
G1	10	B4	AX	40		MD 1-1	7	5	1.4	Tremolite		
G1	1	A2	AQ	3	3	F	22	3	7.3	Tremolite	Mg, Al, Si, Ca, Fe	
G1	15	I7	AX	59	65	F	11.35	2	5.7	Tremolite		
G1	2	C2	AX	5	5	F	40	3.75	10.7	Tremolite		
G1	2	C2	AX	7	7	F	20	1.75	11.4	Tremolite		
G1	3	E2	AX	11	11	F	9	1.2	7.5	Tremolite		
G1	3	E2	AX	12		MD 2-1	20	18	1.1	Tremolite		
G1	4	G2	AX	15		MD 3-0	40	40	1	Tremolite	Mg, Al, Si, Ca, Fe	
G1	5	I2	AX	19	22	F	6.5	0.37	17.6	Tremolite		
G1	5	I2	AX	20	23	F	8.2	0.55	14.9	Tremolite		
G1	5	I2	AX	22		MD 1-1	8.5	8	1.1	Tremolite		
G1	5	I2	AX	23	26	F	11.35	2.15	5.3	Tremolite		
G1	9	D4	AX	34	37	F	6	0.35	17.1	Tremolite		
G1	1	A2	AQ	4		MD 1-0	5.5	2	2.8	Tremolite	Mg, Al, Si, Ca, Fe	
G1	6	J4	AX	25		MD 1-1	10	4.5	2.2	Tremolite		
G1	10	B4	AX	36	39	F	13.4	1.35	9.9	Tremolite		
G1	10	B4	AX	38		MD 2-1	9.35	5.65	1.7	Tremolite		
G1	1	A2	ADQ	1		MD 1-1	20	20	1	Tremolite	Mg, Al, Si, Ca, Fe	
G1	8	F4	AX	33	36	F	10.7	1.2	8.9	Tremolite		
G1	8	F4	AX	32	35	F	10.75	1.2	9	Tremolite		
G1	7	H4	AX	30	33	F	5.7	0.85	6.7	Tremolite		

Lab/Cor, Inc.
7619 6th Ave Nw
Seattle, WA 98117

Phone: (206) 781-0155
Fax: (206) 789-8424
http://www.labcor.net

A Professional Service Corporation in the Northwest

ISO 10312, Direct Count Categories

Job Number: 070434 **SEA** **Report Number:** 070434R06
Client: Idaho National Laboratory **Date Received:** 4/23/2007
Project Name: RARE

Lab/Cor Sample No.: S27
Client Sample No.: FB-2-R2
Description:
Filter Fraction: 1 **Aliquot Dilution:** 0
Residual Ash Vol: **Final Dilution:** 0

Volume (L): 0
Lab Filter Area (mm2): 385
Grid Openings Analyzed: 35
Average Grid Opening Area: 0.009
Area Analyzed (mm2): 0.315
Analytical Sens. (struc/cc): 0
Dectection Limit. (struc/cc): 0

Structure Type	Filter Density (s/mm2)	Concen-tration (struc/cc)	95% Confidence Interval (struc/cc)	Structure Count[1] Prim/Total
Asbestos Structures >5um and 3:1	273.0	Not Applicable	Not Applicable	86

Gr	No.	Loc.	ID	Prim	Tot	Class	Len	Wid	Asp	Analyte	Elements	Comment
G1	6	J4	AX	27	30	F	7.7	0.75	10.3	Tremolite		
G1	6	J4	AX	26		MD 1-0	5.5	3	1.8	Tremolite		
G1	10	B4	AX	37	40	F	7.8	0.65	12	Tremolite		
G2	28	F4	AX	132	140	F	25	0.7	35.7	Tremolite		
G2	33	E7	AX	153	161	F	17.5	2.25	7.8	Tremolite		
G2	30	B4	AX	142	150	F	14	1.7	8.2	Tremolite		
G2	29	D4	AX	133	141	F	48.5	1.85	26.2	Tremolite		
G2	29	D4	AX	135		MD 1-1	8.5	3.5	2.4	Tremolite		
G2	29	D4	AX	136	144	F	38	1.5	25.3	Tremolite		
G2	29	D4	AX	137		MD 1-1	13	10	1.3	Tremolite		
G2	29	D4	AX	139	147	F	10.3	1	10.3	Tremolite		
G2	30	B4	AX	141	149	F	9.2	1.2	7.7	Tremolite		
G2	31	A7	AX	143	151	F	5.6	0.7	8	Tremolite		
G2	31	A7	AX	144	152	F	7.5	0.75	10	Tremolite		
G2	31	A7	AX	146	154	F	15.7	2	7.8	Tremolite		
G2	31	A7	AX	147	155	F	5.65	0.6	9.4	Tremolite		
G2	33	E7	AX	150	158	F	7.8	0.8	9.8	Tremolite		
G2	35	I7	AX	155	163	F	5.5	0.6	9.2	Tremolite		
G2	35	I7	AX	156		MD 2-0	5.8	5.25	1.1	Tremolite		
G2	25	I2	AX	120	127	F	9.2	0.55	16.7	Tremolite		
G2	35	I7	AX	157	166	F	8.4	0.65	12.9	Tremolite		
G2	32	C7	AX	148	156	F	8.4	0.55	15.3	Tremolite		
G2	22	C2	AX	99	106	F	27	4	6.8	Tremolite		
G2	26	J4	AX	126	133	F	6.5	0.45	14.4	Tremolite		
G2	27	H4	AX	129		MD 2-1	12.5	9	1.4	Tremolite		
G2	21	A2	AX	95	102	F	7.8	1.5	5.2	Tremolite		
G2	22	C2	AX	98	105	F	17	2	8.5	Tremolite		
G2	22	C2	AX	100	107	F	27.5	2	13.8	Tremolite		
G2	22	C2	AX	101	108	F	19.5	1.75	11.1	Tremolite		
G2	22	C2	AX	102	109	F	24.75	4.5	5.5	Tremolite		
G2	23	E2	AX	104	111	F	5.2	0.55	9.5	Tremolite		
G2	25	I2	AX	119	126	F	22	1	22	Tremolite		
G2	24	G2	AX	110	117	F	11.2	1.2	9.3	Tremolite		
G2	24	G2	AX	111	118	F	26	3.25	8	Tremolite		

Lab/Cor, Inc.
7619 6th Ave Nw
Seattle, WA 98117

Phone: (206) 781-0155
Fax: (206) 789-8424
http://www.labcor.net

A Professional Service Corporation in the Northwest

ISO 10312, Direct Count Categories

Job Number: 070434 **SEA** **Report Number:** 070434R06
Client: Idaho National Laboratory **Date Received:** 4/23/2007
Project Name: RARE

Lab/Cor Sample No.: S27
Client Sample No.: FB-2-R2
Description:
Filter Fraction: 1 **Aliquot Dilution:** 0
Residual Ash Vol: **Final Dilution:** 0

Volume (L): 0
Lab Filter Area (mm2): 385
Grid Openings Analyzed: 35
Average Grid Opening Area: 0.009
Area Analyzed (mm2): 0.315
Analytical Sens. (struc/cc): 0
Dectection Limit. (struc/cc): 0

Structure Type	Filter Density (s/mm2)	Concen-tration (struc/cc)	95% Confidence Interval (struc/cc)	Structure Count[1] Prim/Total
Asbestos Structures >5um and 3:1	273.0	Not Applicable	Not Applicable	86
Asbestos Fibers and Bundles > 5um and 3:1		Not Applicable	Not Applicable	81

Gr	No.	Loc.	ID	Prim	Tot	Class	Len	Wid	Asp	Analyte	Elements	Comment
G2	24	G2	AX	113	120	F	14.52	2.5	5.8	Tremolite		
G2	24	G2	AX	114	121	F	17	1.75	9.7	Tremolite		
G2	25	I2	AX	116	123	F	25	0.65	38.5	Tremolite		
G2	25	I2	AX	117	124	F	10	1.2	8.3	Tremolite		
G2	23	E2	AX	107	114	F	18.63	0.75	24.8	Tremolite		
G2	21	A2	AX	96	103	F	8	0.6	13.3	Tremolite		
G2	25	I2	AX	122	129	F	18.5	1.1	16.8	Tremolite		
G1	18	F9	AX		84	MF	12	1.7	7.1	Tremolite		
G1	17	H9	AX	74	80	F	17	1.7	10	Tremolite		
G1	17	H9	AX	72	78	F	14.25	1.7	8.4	Tremolite		
G1	17	H9	AX	68	74	F	17.5	1.45	12.1	Tremolite		
G1	17	H9	AX		77	MF	5.12	0.5	10.2	Tremolite		
G1	16	J9	AX	63	69	F	16.85	1.65	10.2	Tremolite		
G1	15	I7	AX	60	66	F	12	1.8	6.7	Tremolite		
G1	15	I7	AX	58	64	F	12	0.8	15	Tremolite		
G1	18	F9	AX		85	MF	14	0.5	28	Tremolite		
G1	12	C7	AX		53	MF	9	0.8	11.2	Tremolite		
G1	15	I7	AX	59	65	F	11.35	2	5.7	Tremolite		
G1	18	F9	AX		86	MF	14	1	14	Tremolite		
G1	18	F9	AX	75	81	F	15	0.38	39.5	Tremolite		
G1	18	F9	AX	76	82	B	32.5	1.15	28.3	Tremolite		
G1	19	D9	AX		87	MF	13.4	2	6.7	Tremolite		
G1	19	D9	AX		88	MF	5.5	0.6	9.2	Tremolite		
G1	19	D9	AX		89	MF	16	0.65	24.6	Tremolite		
G1	19	D9	AX	84	91	F	15.3	2	7.7	Tremolite		
G1	19	D9	AX	87	94	F	5.2	0.8	6.5	Tremolite		
G1	20	B9	AX	91	98	F	6	0.5	12	Tremolite		
G1	12	C7	AX	51	57	F	24	1.5	16	Tremolite		
G1	20	B9	AX	89	96	F	10.4	1.5	6.9	Tremolite		
G1	2	C2	AX	6	6	F	7.85	1.15	6.8	Tremolite		
G1	13	E7	AX		58	MF	10	1.5	6.7	Tremolite		
G1	2	C2	AX	5	5	F	40	3.75	10.7	Tremolite		

Lab/Cor, Inc.
7619 6th Ave Nw
Seattle, WA 98117

Phone: (206) 781-0155
Fax: (206) 789-8424
http://www.labcor.net

A Professional Service Corporation in the Northwest

ISO 10312, Direct Count Categories

Job Number: 070434 **SEA**
Report Number: 070434R06
Client: Idaho National Laboratory
Date Received: 4/23/2007
Project Name: RARE

Lab/Cor Sample No.: S27
Client Sample No.: FB-2-R2
Description:
Filter Fraction: 1
Residual Ash Vol:
Aliquot Dilution: 0
Final Dilution: 0
Volume (L): 0
Lab Filter Area (mm2): 385
Grid Openings Analyzed: 35
Average Grid Opening Area: 0.009
Area Analyzed (mm2): 0.315
Analytical Sens. (struc/cc): 0
Dectection Limit. (struc/cc): 0

Structure Type	Filter Density (s/mm2)	Concen-tration (struc/cc)	95% Confidence Interval (struc/cc)	Structure Count[1] Prim/Total
Asbestos Fibers and Bundles > 5um and 3:1		Not Applicable	Not Applicable	81

Gr	No.	Loc.	ID	Prim	Tot	Class	Len	Wid	Asp	Analyte	Elements	Comment
G1	2	C2	AX	7	7	F	20	1.75	11.4	Tremolite		
G1	3	E2	AX		12	MF	15.25	1.7	9	Tremolite		
G1	3	E2	AX	11	11	F	9	1.2	7.5	Tremolite		
G1	5	I2	AX	19	22	F	6.5	0.37	17.6	Tremolite		
G1	5	I2	AX	20	23	F	8.2	0.55	14.9	Tremolite		
G1	5	I2	AX	23	26	F	11.35	2.15	5.3	Tremolite		
G1	6	J4	AX		28	MF	5.5	0.8	6.9	Tremolite		
G1	6	J4	AX	27	30	F	7.7	0.75	10.3	Tremolite		
G1	11	A7	AX		49	MF	6.5	0.85	7.6	Tremolite		
G1	1	A2	AQ	3	3	F	22	3	7.3	Tremolite	Mg, Al, Si, Ca, Fe	
G1	7	H4	AX	30	33	F	5.7	0.85	6.7	Tremolite		
G1	1	A2	ADQ		1	MF	8.7	0.75	11.6	Tremolite		
G1	10	B4	AX	37	40	F	7.8	0.65	12	Tremolite		
G1	10	B4	AX	36	39	F	13.4	1.35	9.9	Tremolite		
G1	10	B4	AX		44	MF	5.5	0.75	7.3	Tremolite		
G1	10	B4	AX		41	MF	8.35	0.35	23.9	Tremolite		
G1	9	D4	AX	34	37	F	6	0.35	17.1	Tremolite		
G1	8	F4	AX	33	36	F	10.7	1.2	8.9	Tremolite		
G1	8	F4	AX	32	35	F	10.75	1.2	9	Tremolite		
G2	28	F4	AX	132	140	F	25	0.7	35.7	Tremolite		
G2	33	E7	AX	153	161	F	17.5	2.25	7.8	Tremolite		
G2	30	B4	AX	142	150	F	14	1.7	8.2	Tremolite		
G2	29	D4	AX		145	MF	13	0.7	18.6	Tremolite		
G2	29	D4	AX	133	141	F	48.5	1.85	26.2	Tremolite		
G2	29	D4	AX	136	144	F	38	1.5	25.3	Tremolite		
G2	29	D4	AX	139	147	F	10.3	1	10.3	Tremolite		
G2	30	B4	AX	141	149	F	9.2	1.2	7.7	Tremolite		
G2	29	D4	AX		143	MF	5.85	0.5	11.7	Tremolite		
G2	31	A7	AX	143	151	F	5.6	0.7	8	Tremolite		
G2	31	A7	AX	144	152	F	7.5	0.75	10	Tremolite		
G2	31	A7	AX	146	154	F	15.7	2	7.8	Tremolite		
G2	31	A7	AX	147	155	F	5.65	0.6	9.4	Tremolite		
G2	33	E7	AX	150	158	F	7.8	0.8	9.8	Tremolite		
G2	35	I7	AX	155	163	F	5.5	0.6	9.2	Tremolite		

Lab/Cor, Inc.
7619 6th Ave Nw
Seattle, WA 98117

Phone: (206) 781-0155
Fax: (206) 789-8424
http://www.labcor.net

A Professional Service Corporation in the Northwest

ISO 10312, Direct Count Categories

Job Number: 070434 **SEA**
Client: Idaho National Laboratory
Project Name: RARE

Report Number: 070434R06
Date Received: 4/23/2007

Lab/Cor Sample No.: S27
Client Sample No.: FB-2-R2
Description:
Filter Fraction: 1
Residual Ash Vol:

Aliquot Dilution: 0
Final Dilution: 0

Volume (L): 0
Lab Filter Area (mm2): 385
Grid Openings Analyzed: 35
Average Grid Opening Area: 0.009
Area Analyzed (mm2): 0.315
Analytical Sens. (struc/cc): 0
Dectection Limit. (struc/cc): 0

Structure Type	Filter Density (s/mm2)	Concen-tration (struc/cc)	95% Confidence Interval (struc/cc)	Structure Count[1] Prim/Total
Asbestos Fibers and Bundles > 5um and 3:1		Not Applicable	Not Applicable	81

Gr	No.	Loc.	ID	Prim	Tot	Class	Len	Wid	Asp	Analyte	Elements	Comment
G2	35	I7	AX	157	166	F	8.4	0.65	12.9	Tremolite		
G2	27	H4	AX		136	MF	12.5	0.85	14.7	Tremolite		
G2	25	I2	AX	120	127	F	9.2	0.55	16.7	Tremolite		
G2	32	C7	AX	148	156	F	8.4	0.55	15.3	Tremolite		
G2	22	C2	AX	102	109	F	24.75	4.5	5.5	Tremolite		
G2	26	J4	AX	126	133	F	6.5	0.45	14.4	Tremolite		
G2	22	C2	AX	98	105	F	17	2	8.5	Tremolite		
G2	22	C2	AX	99	106	F	27	4	6.8	Tremolite		
G2	22	C2	AX	101	108	F	19.5	1.75	11.1	Tremolite		
G2	21	A2	AX	96	103	F	8	0.6	13.3	Tremolite		
G2	23	E2	AX	104	111	F	5.2	0.55	9.5	Tremolite		
G2	23	E2	AX	107	114	F	18.63	0.75	24.8	Tremolite		
G2	24	G2	AX	110	117	F	11.2	1.2	9.3	Tremolite		
G2	21	A2	AX	95	102	F	7.8	1.5	5.2	Tremolite		
G2	24	G2	AX	113	120	F	14.52	2.5	5.8	Tremolite		
G2	24	G2	AX	114	121	F	17	1.75	9.7	Tremolite		
G2	25	I2	AX	116	123	F	25	0.65	38.5	Tremolite		
G2	25	I2	AX	117	124	F	10	1.2	8.3	Tremolite		
G2	25	I2	AX	119	126	F	22	1	22	Tremolite		
G2	24	G2	AX	111	118	F	26	3.25	8	Tremolite		
G2	22	C2	AX	100	107	F	27.5	2	13.8	Tremolite		
G2	25	I2	AX	122	129	F	18.5	1.1	16.8	Tremolite		

Lab/Cor, Inc.
7619 6th Ave Nw
Seattle, WA 98117

Phone: (206) 781-0155
Fax: (206) 789-8424
http://www.labcor.net

A Professional Service Corporation in the Northwest

ISO 10312, Direct Count Categories

Job Number: 070434 **SEA** **Report Number:** 070434R06
Client: Idaho National Laboratory **Date Received:** 4/23/2007
Project Name: RARE

Lab/Cor Sample No.: S28
Client Sample No.: FB-2-R3
Description:
Filter Fraction: 1 **Aliquot Dilution:** 0
Residual Ash Vol: **Final Dilution:** 0

Volume (L): 0
Lab Filter Area (mm2): 385
Grid Openings Analyzed: 35
Average Grid Opening Area: 0.009
Area Analyzed (mm2): 0.315
Analytical Sens. (struc/cc): 0
Dectection Limit. (struc/cc): 0

Structure Type	Filter Density (s/mm2)	Concen-tration (struc/cc)	95% Confidence Interval (struc/cc)	Structure Count[1] Prim/Total
PCM Equivalent Fibers-ISO		Not Applicable	Not Applicable	81

Gr	No.	Loc.	ID	Prim	Tot	Class	Len	Wid	Asp	Analyte	Elements	Comment
G1	13	E7	AX	77	78	F	5.25	0.5	10.5	Tremolite		
G1	12	C7	AX		72	MB	9.8	1.35	7.3	Tremolite		
G1	12	C7	AX		71	MF	6	0.85	7.1	Tremolite		
G1	12	C7	AX		69	CF	14.3	0.6	23.8	Tremolite		
G1	10	B4	AX	60	60	F	10.6	0.8	13.2	Tremolite		
G1	9	D4	AX	57	57	F	10.7	0.6	17.8	Tremolite		
G1	14	G7	AX	82	83	F	9.5	1.2	7.9	Tremolite		
G1	9	D4	AX	58	58	F	9	1.2	7.5	Tremolite		
G1	14	G7	AX	84	85	F	8	1.25	6.4	Tremolite		
G1	15	I7	AX	88	89	F	5.5	0.65	8.5	Tremolite		
G1	15	I7	AX	89	90	F	5.3	0.35	15.1	Tremolite		
G1	15	I7	AX	90	91	F	6.2	1.1	5.6	Tremolite		
G1	15	I7	AX	91	92	F	9.2	0.8	11.5	Tremolite		
G1	16	J9	AX	95	96	F	12.5	1.75	7.1	Tremolite		
G1	17	H9	AX		103	MF	6.5	1.2	5.4	Tremolite		
G1	18	F9	AX	107	108	F	55	2.2	25	Tremolite		
G1	8	F4	AX	53	53	F	7.85	1	7.8	Tremolite		
G1	8	F4	AX	50	50	F	20	2.5	8	Tremolite		
G1	17	H9	AX	99	100	F	11	1.25	8.8	Tremolite		
G1	2	C2	AQ	8	8	F	6.35	0.45	14.1	Tremolite		
G1	9	D4	AX	56	56	F	7.2	1.25	5.8	Tremolite		
G1	1	A2	AQ	4	4	F	17	1.1	15.5	Tremolite		
G1	1	A2	AQ	6	6	F	8	0.7	11.4	Tremolite		
G1	2	C2	AD	11	11	F	10.5	0.7	15	Tremolite		
G1	2	C2	AQ	10	10	F	7.75	1.12	6.9	Tremolite		
G1	3	E2	AD	15	15	F	13	0.75	17.3	Tremolite		
G1	3	E2	AD	17	17	F	7.58	1	7.6	Tremolite		
G1	3	E2	AD	18	18	F	5.7	0.8	7.1	Tremolite		
G1	7	H4	AX	47	47	F	15	2.75	5.5	Tremolite		
G1	4	G2	AD	21	21	F	6	1	6	Tremolite		
G1	4	G2	AD	24	24	F	9.8	1.65	5.9	Tremolite		
G1	5	I2	AD	32	32	F	12.5	0.85	14.7	Tremolite		
G1	5	I2	AD	33	33	F	5.5	0.65	8.5	Tremolite		
G1	6	J4	AD	39	39	F	12.5	0.65	19.2	Tremolite		

Lab/Cor, Inc.
7619 6th Ave Nw
Seattle, WA 98117

Phone: (206) 781-0155
Fax: (206) 789-8424
http://www.labcor.net

A Professional Service Corporation in the Northwest

ISO 10312, Direct Count Categories

Job Number: 070434 **SEA** **Report Number:** 070434R06
Client: Idaho National Laboratory **Date Received:** 4/23/2007
Project Name: RARE

Lab/Cor Sample No.: S28
Client Sample No.: FB-2-R3
Description:
Filter Fraction: 1 **Aliquot Dilution:** 0
Residual Ash Vol: **Final Dilution:** 0

Volume (L): 0
Lab Filter Area (mm2): 385
Grid Openings Analyzed: 35
Average Grid Opening Area: 0.009
Area Analyzed (mm2): 0.315
Analytical Sens. (struc/cc): 0
Dectection Limit. (struc/cc): 0

Structure Type	Filter Density (s/mm2)	Concen-tration (struc/cc)	95% Confidence Interval (struc/cc)	Structure Count[1] Prim/Total
PCM Equivalent Fibers-ISO		Not Applicable	Not Applicable	81

Gr	No.	Loc.	ID	Prim	Tot	Class	Len	Wid	Asp	Analyte	Elements	Comment
G1	7	H4	AD	43	43	F	9.5	0.65	14.6	Tremolite		
G1	3	E2	AD	20	20	F	7	0.45	15.6	Tremolite		
G1	1	A2	AZQ	3	3	F	7	0.65	10.8	Tremolite	Mg, Al, Si, Ca, Fe	
G1	7	H4	AX	49	49	F	5.7	1.2	4.7	Tremolite		
G2	31	A7	AX	186	187	F	19	1.5	12.7	Tremolite		
G2	31	A7	AX	183	184	F	7.15	1.1	6.5	Tremolite		
G2	30	B4	AX	180	181	F	10.65	1.5	7.1	Tremolite		
G2	29	D4	AX	177	178	F	8	1.2	6.7	Tremolite		
G2	29	D4	AX	175	176	F	12.2	1.2	10.2	Tremolite		
G2	29	D4	AX	174	175	F	9.3	2.35	4	Tremolite		
G2	28	F4	AX	172	173	F	7	1.5	4.7	Tremolite		
G2	28	F4	AX	169	170	F	20	0.85	23.5	Tremolite		
G2	31	A7	AX	187	188	F	10	1.8	5.6	Tremolite		
G2	35	I7	AX	205	206	F	11.2	0.4	28	Tremolite		
G2	28	F4	AX	170	171	F	5.5	0.8	6.9	Tremolite		
G2	31	A7	AX	188	189	F	10.1	1.25	8.1	Tremolite		
G2	31	A7	AX	189	190	F	30	3	10	Tremolite		
G2	33	E7	AX		198	MF	5.1	0.27	18.9	Tremolite		
G2	33	E7	AX	194	195	F	9.2	0.6	15.3	Tremolite		
G2	33	E7	AX	195	196	F	14	1.2	11.7	Tremolite		
G2	33	E7	AX	198	199	F	7	0.8	8.8	Tremolite		
G2	34	G7	AX	199	200	F	7.8	1.8	4.3	Tremolite		
G2	34	G7	AX	200	201	F	7.8	0.38	20.5	Tremolite		
G2	35	I7	AX		210	MF	9	0.6	15	Tremolite		
G2	26	J4	AX	160	161	F	6.2	1.12	5.5	Tremolite		
G2	34	G7	AX	202	203	F	5.12	1.7	3	Tremolite		
G2	22	C2	AX	125	126	F	5.4	0.6	9	Tremolite		
G2	27	H4	AX	167	168	F	7.5	0.55	13.6	Tremolite		
G2	22	C2	AX	124	125	F	9	1	9	Tremolite		
G2	27	H4	AX	163	164	F	8	1.2	6.7	Tremolite		
G2	22	C2	AX	128	129	F	7.7	0.45	17.1	Tremolite		
G2	22	C2	AX	129	130	F	15	2.5	6	Tremolite		
G2	22	C2	AX	131	132	F	5.12	0.45	11.4	Tremolite		
G2	22	C2	AX	133	134	F	12	2.5	4.8	Tremolite		

Lab/Cor, Inc.
7619 6th Ave Nw
Seattle, WA 98117

Phone: (206) 781-0155
Fax: (206) 789-8424
http://www.labcor.net

A Professional Service Corporation in the Northwest

ISO 10312, Direct Count Categories

Job Number: 070434 **SEA**
Report Number: 070434R06
Client: Idaho National Laboratory
Date Received: 4/23/2007
Project Name: RARE

Lab/Cor Sample No.: S28
Client Sample No.: FB-2-R3
Description:
Filter Fraction: 1
Residual Ash Vol:
Aliquot Dilution: 0
Final Dilution: 0
Volume (L): 0
Lab Filter Area (mm2): 385
Grid Openings Analyzed: 35
Average Grid Opening Area: 0.009
Area Analyzed (mm2): 0.315
Analytical Sens. (struc/cc): 0
Dectection Limit. (struc/cc): 0

Structure Type	Filter Density (s/mm2)	Concen-tration (struc/cc)	95% Confidence Interval (struc/cc)	Structure Count[1] Prim/Total
PCM Equivalent Fibers-ISO		Not Applicable	Not Applicable	81

Gr	No.	Loc.	ID	Prim	Tot	Class	Len	Wid	Asp	Analyte	Elements	Comment
G2	23	E2	AX		139	MF	6	0.3	20	Tremolite		
G2	23	E2	AX	137	138	F	5.25	1.35	3.9	Tremolite		
G2	23	E2	AX	142	143	F	15	1.8	8.3	Tremolite		
G2	26	J4	AX	159	160	F	9	0.3	30	Tremolite		
G2	24	G2	AX	145	146	F	16.8	0.38	44.2	Tremolite		
G2	25	I2	AX	148	149	F	9.5	1.2	7.9	Tremolite		
G2	25	I2	AX	150	151	F	7.2	0.85	8.5	Tremolite		
G2	25	I2	AX	151	152	F	10	1.7	5.9	Tremolite		
G2	25	I2	AX	154	155	F	9	3	3	Tremolite		
G2	25	I2	AX	156	157	F	5.25	0.75	7	Tremolite		
G2	26	J4	AX	158	159	F	5.7	1.2	4.7	Tremolite		
G2	21	A2	AX	119	120	F	10	0.6	16.7	Tremolite		
G2	24	G2	AX	144	145	F	11.85	0.885	13.4	Tremolite		

PCM Equivalent Structures-ISO	244.4	Not Applicable	Not Applicable	77	

Gr	No.	Loc.	ID	Prim	Tot	Class	Len	Wid	Asp	Analyte	Elements	Comment
G1	12	C7	AX	69		CD 2-1	14.3	1.5	9.5	Tremolite		
G1	9	D4	AX	58	58	F	9	1.2	7.5	Tremolite		
G1	9	D4	AX	57	57	F	10.7	0.6	17.8	Tremolite		
G1	9	D4	AX	56	56	F	7.2	1.25	5.8	Tremolite		
G1	14	G7	AX	82	83	F	9.5	1.2	7.9	Tremolite		
G1	8	F4	AX	50	50	F	20	2.5	8	Tremolite		
G1	17	H9	AX	99	100	F	11	1.25	8.8	Tremolite		
G1	8	F4	AX	53	53	F	7.85	1	7.8	Tremolite		
G1	14	G7	AX	84	85	F	8	1.25	6.4	Tremolite		
G1	15	I7	AX	88	89	F	5.5	0.65	8.5	Tremolite		
G1	15	I7	AX	89	90	F	5.3	0.35	15.1	Tremolite		
G1	15	I7	AX	90	91	F	6.2	1.1	5.6	Tremolite		
G1	16	J9	AX	95	96	F	12.5	1.75	7.1	Tremolite		
G1	18	F9	AX	107	108	F	55	2.2	25	Tremolite		
G1	7	H4	AX	49	49	F	5.7	1.2	4.7	Tremolite		
G1	10	B4	AX	60	60	F	10.6	0.8	13.2	Tremolite		
G1	15	I7	AX	91	92	F	9.2	0.8	11.5	Tremolite		
G1	1	A2	AQ	6	6	F	8	0.7	11.4	Tremolite		
G1	13	E7	AX	77	78	F	5.25	0.5	10.5	Tremolite		

Lab/Cor, Inc.
7619 6th Ave Nw
Seattle, WA 98117

Phone: (206) 781-0155
Fax: (206) 789-8424
http://www.labcor.net

A Professional Service Corporation in the Northwest

ISO 10312, Direct Count Categories

Job Number: 070434 **SEA** **Report Number:** 070434R06
Client: Idaho National Laboratory **Date Received:** 4/23/2007
Project Name: RARE

Lab/Cor Sample No.: S28
Client Sample No.: FB-2-R3
Description:
Filter Fraction: 1 **Aliquot Dilution:** 0
Residual Ash Vol: **Final Dilution:** 0

Volume (L): 0
Lab Filter Area (mm2): 385
Grid Openings Analyzed: 35
Average Grid Opening Area: 0.009
Area Analyzed (mm2): 0.315
Analytical Sens. (struc/cc): 0
Dectection Limit. (struc/cc): 0

Structure Type	Filter Density (s/mm2)	Concen-tration (struc/cc)	95% Confidence Interval (struc/cc)	Structure Count[1] Prim/Total
PCM Equivalent Structures-ISO	244.4	Not Applicable	Not Applicable	77

Gr	No.	Loc.	ID	Prim	Tot	Class	Len	Wid	Asp	Analyte	Elements	Comment
G1	1	A2	AZQ	3	3	F	7	0.65	10.8	Tremolite	Mg, Al, Si, Ca, Fe	
G1	2	C2	AD	11	11	F	10.5	0.7	15	Tremolite		
G1	2	C2	AQ	8	8	F	6.35	0.45	14.1	Tremolite		
G1	2	C2	AQ	10	10	F	7.75	1.12	6.9	Tremolite		
G1	3	E2	AD	15	15	F	13	0.75	17.3	Tremolite		
G1	3	E2	AD	17	17	F	7.58	1	7.6	Tremolite		
G1	3	E2	AD	18	18	F	5.7	0.8	7.1	Tremolite		
G1	3	E2	AD	20	20	F	7	0.45	15.6	Tremolite		
G1	7	H4	AD	43	43	F	9.5	0.65	14.6	Tremolite		
G1	4	G2	AD	21	21	F	6	1	6	Tremolite		
G1	1	A2	AQ	4	4	F	17	1.1	15.5	Tremolite		
G1	4	G2	AD	23		MD 1-0	6	1.5	4	Tremolite		
G1	4	G2	AD	24	24	F	9.8	1.65	5.9	Tremolite		
G1	5	I2	AD	32	32	F	12.5	0.85	14.7	Tremolite		
G1	5	I2	AD	33	33	F	5.5	0.65	8.5	Tremolite		
G1	6	J4	AD	39	39	F	12.5	0.65	19.2	Tremolite		
G1	7	H4	AX	47	47	F	15	2.75	5.5	Tremolite		
G2	31	A7	AX	186	187	F	19	1.5	12.7	Tremolite		
G2	31	A7	AX	183	184	F	7.15	1.1	6.5	Tremolite		
G2	30	B4	AX	180	181	F	10.65	1.5	7.1	Tremolite		
G2	29	D4	AX	177	178	F	8	1.2	6.7	Tremolite		
G2	29	D4	AX	175	176	F	12.2	1.2	10.2	Tremolite		
G2	29	D4	AX	174	175	F	9.3	2.35	4	Tremolite		
G2	31	A7	AX	187	188	F	10	1.8	5.6	Tremolite		
G2	28	F4	AX	170	171	F	5.5	0.8	6.9	Tremolite		
G2	34	G7	AX	199	200	F	7.8	1.8	4.3	Tremolite		
G2	28	F4	AX	172	173	F	7	1.5	4.7	Tremolite		
G2	31	A7	AX	188	189	F	10.1	1.25	8.1	Tremolite		
G2	31	A7	AX	189	190	F	30	3	10	Tremolite		
G2	33	E7	AX	194	195	F	9.2	0.6	15.3	Tremolite		
G2	35	I7	AX	205	206	F	11.2	0.4	28	Tremolite		
G2	33	E7	AX	198	199	F	7	0.8	8.8	Tremolite		
G2	34	G7	AX	200	201	F	7.8	0.38	20.5	Tremolite		
G2	34	G7	AX	202	203	F	5.12	1.7	3	Tremolite		

Lab/Cor, Inc.
7619 6th Ave Nw
Seattle, WA 98117

Phone: (206) 781-0155
Fax: (206) 789-8424
http://www.labcor.net

A Professional Service Corporation in the Northwest

ISO 10312, Direct Count Categories

Job Number: 070434 **SEA** **Report Number:** 070434R06
Client: Idaho National Laboratory **Date Received:** 4/23/2007
Project Name: RARE

Lab/Cor Sample No.: S28
Client Sample No.: FB-2-R3
Description:
Filter Fraction: 1 **Aliquot Dilution:** 0
Residual Ash Vol: **Final Dilution:** 0

Volume (L): 0
Lab Filter Area (mm2): 385
Grid Openings Analyzed: 35
Average Grid Opening Area: 0.009
Area Analyzed (mm2): 0.315
Analytical Sens. (struc/cc): 0
Dectection Limit. (struc/cc): 0

Structure Type	Filter Density (s/mm2)	Concen-tration (struc/cc)	95% Confidence Interval (struc/cc)	Structure Count[1] Prim/Total
PCM Equivalent Structures-ISO	244.4	Not Applicable	Not Applicable	77

Gr	No.	Loc.	ID	Prim	Tot	Class	Len	Wid	Asp	Analyte	Elements	Comment
G2	27	H4	AX	167	168	F	7.5	0.55	13.6	Tremolite		
G2	27	H4	AX	163	164	F	8	1.2	6.7	Tremolite		
G2	33	E7	AX	195	196	F	14	1.2	11.7	Tremolite		
G2	22	C2	AX	124	125	F	9	1	9	Tremolite		
G2	21	A2	AX	117		MD 1-0	9	3	3	Tremolite		
G2	28	F4	AX	169	170	F	20	0.85	23.5	Tremolite		
G2	21	A2	AX	119	120	F	10	0.6	16.7	Tremolite		
G2	22	C2	AX	125	126	F	5.4	0.6	9	Tremolite		
G2	22	C2	AX	128	129	F	7.7	0.45	17.1	Tremolite		
G2	22	C2	AX	129	130	F	15	2.5	6	Tremolite		
G2	22	C2	AX	131	132	F	5.12	0.45	11.4	Tremolite		
G2	22	C2	AX	133	134	F	12	2.5	4.8	Tremolite		
G2	23	E2	AX	137	138	F	5.25	1.35	3.9	Tremolite		
G2	23	E2	AX	142	143	F	15	1.8	8.3	Tremolite		
G2	26	J4	AX	159	160	F	9	0.3	30	Tremolite		
G2	24	G2	AX	144	145	F	11.85	0.885	13.4	Tremolite		
G2	26	J4	AX	160	161	F	6.2	1.12	5.5	Tremolite		
G2	26	J4	AX	158	159	F	5.7	1.2	4.7	Tremolite		
G2	25	I2	AX	156	157	F	5.25	0.75	7	Tremolite		
G2	25	I2	AX	154	155	F	9	3	3	Tremolite		
G2	25	I2	AX	151	152	F	10	1.7	5.9	Tremolite		
G2	25	I2	AX	150	151	F	7.2	0.85	8.5	Tremolite		
G2	25	I2	AX	148	149	F	9.5	1.2	7.9	Tremolite		
G2	24	G2	AX	145	146	F	16.8	0.38	44.2	Tremolite		

PCM Equivalent Fibers-NIOSH		Not Applicable	Not Applicable	86

Gr	No.	Loc.	ID	Prim	Tot	Class	Len	Wid	Asp	Analyte	Elements	Comment
G1	15	I7	AX	91	92	F	9.2	0.8	11.5	Tremolite		
G1	14	G7	AX	82	83	F	9.5	1.2	7.9	Tremolite		
G1	9	D4	AX	58	58	F	9	1.2	7.5	Tremolite		
G1	10	B4	AX	60	60	F	10.6	0.8	13.2	Tremolite		
G1	12	C7	AX		69	CF	14.3	0.6	23.8	Tremolite		
G1	12	C7	AX		71	MF	6	0.85	7.1	Tremolite		
G1	12	C7	AX		72	MB	9.8	1.35	7.3	Tremolite		
G1	13	E7	AX	77	78	F	5.25	0.5	10.5	Tremolite		

Lab/Cor, Inc.
7619 6th Ave Nw
Seattle, WA 98117

Phone: (206) 781-0155
Fax: (206) 789-8424
http://www.labcor.net

A Professional Service Corporation in the Northwest

ISO 10312, Direct Count Categories

Job Number: 070434 **SEA** **Report Number:** 070434R06
Client: Idaho National Laboratory **Date Received:** 4/23/2007
Project Name: RARE

Lab/Cor Sample No.: S28
Client Sample No.: FB-2-R3
Description:
Filter Fraction: 1 **Aliquot Dilution:** 0
Residual Ash Vol: **Final Dilution:** 0

Volume (L): 0
Lab Filter Area (mm2): 385
Grid Openings Analyzed: 35
Average Grid Opening Area: 0.009
Area Analyzed (mm2): 0.315
Analytical Sens. (struc/cc): 0
Dectection Limit. (struc/cc): 0

Structure Type	Filter Density (s/mm2)	Concen-tration (struc/cc)	95% Confidence Interval (struc/cc)	Structure Count[1] Prim/Total
PCM Equivalent Fibers-NIOSH		Not Applicable	Not Applicable	86

Gr	No.	Loc.	ID	Prim	Tot	Class	Len	Wid	Asp	Analyte	Elements	Comment
G1	9	D4	AX	56	56	F	7.2	1.25	5.8	Tremolite		
G1	14	G7	AX	84	85	F	8	1.25	6.4	Tremolite		
G1	14	G7	AX	85	86	F	25	6.5	3.8	Tremolite		
G1	15	I7	AX	88	89	F	5.5	0.65	8.5	Tremolite		
G1	18	F9	AX	107	108	F	55	2.2	25	Tremolite		
G1	15	I7	AX	90	91	F	6.2	1.1	5.6	Tremolite		
G1	16	J9	AX	95	96	F	12.5	1.75	7.1	Tremolite		
G1	17	H9	AX		103	MF	6.5	1.2	5.4	Tremolite		
G1	17	H9	AX	99	100	F	11	1.25	8.8	Tremolite		
G1	8	F4	AX	50	50	F	20	2.5	8	Tremolite		
G1	8	F4	AX	53	53	F	7.85	1	7.8	Tremolite		
G1	15	I7	AX	89	90	F	5.3	0.35	15.1	Tremolite		
G1	3	E2	AD	15	15	F	13	0.75	17.3	Tremolite		
G1	9	D4	AX	57	57	F	10.7	0.6	17.8	Tremolite		
G1	1	A2	AQ	6	6	F	8	0.7	11.4	Tremolite		
G1	1	A2	AZQ	3	3	F	7	0.65	10.8	Tremolite	Mg, Al, Si, Ca, Fe	
G1	2	C2	AD	11	11	F	10.5	0.7	15	Tremolite		
G1	2	C2	AQ	10	10	F	7.75	1.12	6.9	Tremolite		
G1	1	A2	AQ	4	4	F	17	1.1	15.5	Tremolite		
G1	3	E2	AD	17	17	F	7.58	1	7.6	Tremolite		
G1	3	E2	AD	18	18	F	5.7	0.8	7.1	Tremolite		
G1	3	E2	AD	20	20	F	7	0.45	15.6	Tremolite		
G1	4	G2	AD	21	21	F	6	1	6	Tremolite		
G1	7	H4	AX	49	49	F	5.7	1.2	4.7	Tremolite		
G1	5	I2	AD	30	30	F	23	4	5.8	Tremolite		
G1	5	I2	AD	32	32	F	12.5	0.85	14.7	Tremolite		
G1	5	I2	AD	33	33	F	5.5	0.65	8.5	Tremolite		
G1	5	I2	AD	34	34	F	20	4.3	4.7	Tremolite		
G1	6	J4	AD	39	39	F	12.5	0.65	19.2	Tremolite		
G1	7	H4	AD	43	43	F	9.5	0.65	14.6	Tremolite		
G1	7	H4	AX	44	44	F	15	3.5	4.3	Tremolite		
G1	4	G2	AD	24	24	F	9.8	1.65	5.9	Tremolite		
G1	2	C2	AQ	8	8	F	6.35	0.45	14.1	Tremolite		
G1	7	H4	AX	47	47	F	15	2.75	5.5	Tremolite		

Lab/Cor, Inc.
7619 6th Ave Nw
Seattle, WA 98117

Phone: (206) 781-0155
Fax: (206) 789-8424
http://www.labcor.net

A Professional Service Corporation in the Northwest

ISO 10312, Direct Count Categories

Job Number: 070434 **SEA** **Report Number:** 070434R06
Client: Idaho National Laboratory **Date Received:** 4/23/2007
Project Name: RARE

Lab/Cor Sample No.: S28
Client Sample No.: FB-2-R3
Description:
Filter Fraction: 1 **Aliquot Dilution:** 0
Residual Ash Vol: **Final Dilution:** 0

Volume (L): 0
Lab Filter Area (mm2): 385
Grid Openings Analyzed: 35
Average Grid Opening Area: 0.009
Area Analyzed (mm2): 0.315
Analytical Sens. (struc/cc): 0
Dectection Limit. (struc/cc): 0

Structure Type	Filter Density (s/mm2)	Concen-tration (struc/cc)	95% Confidence Interval (struc/cc)	Structure Count[1] Prim/Total
PCM Equivalent Fibers-NIOSH		Not Applicable	Not Applicable	86

Gr	No.	Loc.	ID	Prim	Tot	Class	Len	Wid	Asp	Analyte	Elements	Comment
G2	31	A7	AX	187	188	F	10	1.8	5.6	Tremolite		
G2	31	A7	AX	186	187	F	19	1.5	12.7	Tremolite		
G2	31	A7	AX	183	184	F	7.15	1.1	6.5	Tremolite		
G2	30	B4	AX	180	181	F	10.65	1.5	7.1	Tremolite		
G2	29	D4	AX	177	178	F	8	1.2	6.7	Tremolite		
G2	29	D4	AX	175	176	F	12.2	1.2	10.2	Tremolite		
G2	29	D4	AX	174	175	F	9.3	2.35	4	Tremolite		
G2	28	F4	AX	170	171	F	5.5	0.8	6.9	Tremolite		
G2	31	A7	AX	188	189	F	10.1	1.25	8.1	Tremolite		
G2	28	F4	AX	172	173	F	7	1.5	4.7	Tremolite		
G2	31	A7	AX	189	190	F	30	3	10	Tremolite		
G2	33	E7	AX		198	MF	5.1	0.27	18.9	Tremolite		
G2	33	E7	AX	194	195	F	9.2	0.6	15.3	Tremolite		
G2	33	E7	AX	195	196	F	14	1.2	11.7	Tremolite		
G2	33	E7	AX	196	197	F	12	4	3	Tremolite		
G2	33	E7	AX	198	199	F	7	0.8	8.8	Tremolite		
G2	34	G7	AX	199	200	F	7.8	1.8	4.3	Tremolite		
G2	34	G7	AX	200	201	F	7.8	0.38	20.5	Tremolite		
G2	35	I7	AX		210	MF	9	0.6	15	Tremolite		
G2	27	H4	AX	163	164	F	8	1.2	6.7	Tremolite		
G2	35	I7	AX	205	206	F	11.2	0.4	28	Tremolite		
G2	34	G7	AX	202	203	F	5.12	1.7	3	Tremolite		
G2	22	C2	AX	133	134	F	12	2.5	4.8	Tremolite		
G2	28	F4	AX	169	170	F	20	0.85	23.5	Tremolite		
G2	27	H4	AX	167	168	F	7.5	0.55	13.6	Tremolite		
G2	22	C2	AX	124	125	F	9	1	9	Tremolite		
G2	22	C2	AX	125	126	F	5.4	0.6	9	Tremolite		
G2	22	C2	AX	128	129	F	7.7	0.45	17.1	Tremolite		
G2	22	C2	AX	131	132	F	5.12	0.45	11.4	Tremolite		
G2	21	A2	AX	119	120	F	10	0.6	16.7	Tremolite		
G2	23	E2	AX		139	MF	6	0.3	20	Tremolite		
G2	23	E2	AX	137	138	F	5.25	1.35	3.9	Tremolite		
G2	23	E2	AX	142	143	F	15	1.8	8.3	Tremolite		
G2	26	J4	AX	159	160	F	9	0.3	30	Tremolite		

Lab/Cor, Inc.
7619 6th Ave Nw
Seattle, WA 98117

Phone: (206) 781-0155
Fax: (206) 789-8424
http://www.labcor.net

A Professional Service Corporation in the Northwest

ISO 10312, Direct Count Categories

Job Number: 070434 **SEA**
Report Number: 070434R06
Client: Idaho National Laboratory
Date Received: 4/23/2007
Project Name: RARE

Lab/Cor Sample No.: S28
Client Sample No.: FB-2-R3
Description:
Filter Fraction: 1
Residual Ash Vol:
Aliquot Dilution: 0
Final Dilution: 0
Volume (L): 0
Lab Filter Area (mm2): 385
Grid Openings Analyzed: 35
Average Grid Opening Area: 0.009
Area Analyzed (mm2): 0.315
Analytical Sens. (struc/cc): 0
Dectection Limit. (struc/cc): 0

Structure Type	Filter Density (s/mm2)	Concen-tration (struc/cc)	95% Confidence Interval (struc/cc)	Structure Count[1] Prim/Total
PCM Equivalent Fibers-NIOSH		Not Applicable	Not Applicable	86

Gr	No.	Loc.	ID	Prim	Tot	Class	Len	Wid	Asp	Analyte	Elements	Comment
G2	22	C2	AX	129	130	F	15	2.5	6	Tremolite		
G2	26	J4	AX	160	161	F	6.2	1.12	5.5	Tremolite		
G2	24	G2	AX	144	145	F	11.85	0.885	13.4	Tremolite		
G2	26	J4	AX	158	159	F	5.7	1.2	4.7	Tremolite		
G2	25	I2	AX	156	157	F	5.25	0.75	7	Tremolite		
G2	25	I2	AX	154	155	F	9	3	3	Tremolite		
G2	25	I2	AX	151	152	F	10	1.7	5.9	Tremolite		
G2	25	I2	AX	150	151	F	7.2	0.85	8.5	Tremolite		
G2	25	I2	AX	148	149	F	9.5	1.2	7.9	Tremolite		
G2	24	G2	AX	145	146	F	16.8	0.38	44.2	Tremolite		

PCM Equivalent Structures-NIOSH	260.3	Not Applicable	Not Applicable	82	

Gr	No.	Loc.	ID	Prim	Tot	Class	Len	Wid	Asp	Analyte	Elements	Comment
G1	12	C7	AX	69		CD 2-1	14.3	1.5	9.5	Tremolite		
G1	7	H4	AX	49	49	F	5.7	1.2	4.7	Tremolite		
G1	8	F4	AX	50	50	F	20	2.5	8	Tremolite		
G1	8	F4	AX	53	53	F	7.85	1	7.8	Tremolite		
G1	9	D4	AX	56	56	F	7.2	1.25	5.8	Tremolite		
G1	9	D4	AX	57	57	F	10.7	0.6	17.8	Tremolite		
G1	9	D4	AX	58	58	F	9	1.2	7.5	Tremolite		
G1	10	B4	AX	60	60	F	10.6	0.8	13.2	Tremolite		
G1	18	F9	AX	107	108	F	55	2.2	25	Tremolite		
G1	13	E7	AX	77	78	F	5.25	0.5	10.5	Tremolite		
G1	14	G7	AX	82	83	F	9.5	1.2	7.9	Tremolite		
G1	14	G7	AX	84	85	F	8	1.25	6.4	Tremolite		
G1	14	G7	AX	85	86	F	25	6.5	3.8	Tremolite		
G1	15	I7	AX	88	89	F	5.5	0.65	8.5	Tremolite		
G1	15	I7	AX	89	90	F	5.3	0.35	15.1	Tremolite		
G1	15	I7	AX	90	91	F	6.2	1.1	5.6	Tremolite		
G1	15	I7	AX	91	92	F	9.2	0.8	11.5	Tremolite		
G1	16	J9	AX	95	96	F	12.5	1.75	7.1	Tremolite		
G1	7	H4	AD	43	43	F	9.5	0.65	14.6	Tremolite		
G1	17	H9	AX	99	100	F	11	1.25	8.8	Tremolite		
G1	2	C2	AQ	10	10	F	7.75	1.12	6.9	Tremolite		
G1	7	H4	AX	47	47	F	15	2.75	5.5	Tremolite		

Lab/Cor, Inc.
7619 6th Ave Nw
Seattle, WA 98117

Phone: (206) 781-0155
Fax: (206) 789-8424
http://www.labcor.net

A Professional Service Corporation in the Northwest

ISO 10312, Direct Count Categories

Job Number: 070434 **SEA**
Report Number: 070434R06
Client: Idaho National Laboratory
Date Received: 4/23/2007
Project Name: RARE

Lab/Cor Sample No.: S28
Client Sample No.: FB-2-R3
Description:
Filter Fraction: 1
Residual Ash Vol:
Aliquot Dilution: 0
Final Dilution: 0
Volume (L): 0
Lab Filter Area (mm2): 385
Grid Openings Analyzed: 35
Average Grid Opening Area: 0.009
Area Analyzed (mm2): 0.315
Analytical Sens. (struc/cc): 0
Dectection Limit. (struc/cc): 0

Structure Type	Filter Density (s/mm2)	Concen-tration (struc/cc)	95% Confidence Interval (struc/cc)	Structure Count[1] Prim/Total
PCM Equivalent Structures-NIOSH	260.3	Not Applicable	Not Applicable	82

Gr	No.	Loc.	ID	Prim	Tot	Class	Len	Wid	Asp	Analyte	Elements	Comment
G1	1	A2	AQ	4	4	F	17	1.1	15.5	Tremolite		
G1	1	A2	AQ	6	6	F	8	0.7	11.4	Tremolite		
G1	1	A2	AZQ	3	3	F	7	0.65	10.8	Tremolite	Mg, Al, Si, Ca, Fe	
G1	2	C2	AQ	8	8	F	6.35	0.45	14.1	Tremolite		
G1	7	H4	AX	44	44	F	15	3.5	4.3	Tremolite		
G1	3	E2	AD	15	15	F	13	0.75	17.3	Tremolite		
G1	3	E2	AD	17	17	F	7.58	1	7.6	Tremolite		
G1	3	E2	AD	18	18	F	5.7	0.8	7.1	Tremolite		
G1	5	I2	AD	34	34	F	20	4.3	4.7	Tremolite		
G1	2	C2	AD	11	11	F	10.5	0.7	15	Tremolite		
G1	6	J4	AD	39	39	F	12.5	0.65	19.2	Tremolite		
G1	3	E2	AD	20	20	F	7	0.45	15.6	Tremolite		
G1	5	I2	AD	33	33	F	5.5	0.65	8.5	Tremolite		
G1	5	I2	AD	32	32	F	12.5	0.85	14.7	Tremolite		
G1	5	I2	AD	30	30	F	23	4	5.8	Tremolite		
G1	4	G2	AD	24	24	F	9.8	1.65	5.9	Tremolite		
G1	4	G2	AD	23		MD 1-0	6	1.5	4	Tremolite		
G1	4	G2	AD	21	21	F	6	1	6	Tremolite		
G2	31	A7	AX	187	188	F	10	1.8	5.6	Tremolite		
G2	28	F4	AX	172	173	F	7	1.5	4.7	Tremolite		
G2	29	D4	AX	174	175	F	9.3	2.35	4	Tremolite		
G2	29	D4	AX	175	176	F	12.2	1.2	10.2	Tremolite		
G2	29	D4	AX	177	178	F	8	1.2	6.7	Tremolite		
G2	30	B4	AX	180	181	F	10.65	1.5	7.1	Tremolite		
G2	31	A7	AX	183	184	F	7.15	1.1	6.5	Tremolite		
G2	31	A7	AX	186	187	F	19	1.5	12.7	Tremolite		
G2	28	F4	AX	170	171	F	5.5	0.8	6.9	Tremolite		
G2	31	A7	AX	188	189	F	10.1	1.25	8.1	Tremolite		
G2	31	A7	AX	189	190	F	30	3	10	Tremolite		
G2	33	E7	AX	194	195	F	9.2	0.6	15.3	Tremolite		
G2	33	E7	AX	195	196	F	14	1.2	11.7	Tremolite		
G2	33	E7	AX	196	197	F	12	4	3	Tremolite		
G2	33	E7	AX	198	199	F	7	0.8	8.8	Tremolite		
G2	34	G7	AX	199	200	F	7.8	1.8	4.3	Tremolite		

Lab/Cor, Inc.
7619 6th Ave Nw
Seattle, WA 98117

Phone: (206) 781-0155
Fax: (206) 789-8424
http://www.labcor.net

A Professional Service Corporation in the Northwest

ISO 10312, Direct Count Categories

Job Number: 070434 **SEA** **Report Number:** 070434R06
Client: Idaho National Laboratory **Date Received:** 4/23/2007
Project Name: RARE

Lab/Cor Sample No.: S28
Client Sample No.: FB-2-R3
Description:
Filter Fraction: 1 **Aliquot Dilution:** 0
Residual Ash Vol: **Final Dilution:** 0

Volume (L): 0
Lab Filter Area (mm2): 385
Grid Openings Analyzed: 35
Average Grid Opening Area: 0.009
Area Analyzed (mm2): 0.315
Analytical Sens. (struc/cc): 0
Dectection Limit. (struc/cc): 0

Structure Type	Filter Density (s/mm2)	Concen-tration (struc/cc)	95% Confidence Interval (struc/cc)	Structure Count[1] Prim/Total
PCM Equivalent Structures-NIOSH	260.3	Not Applicable	Not Applicable	82

Gr	No.	Loc.	ID	Prim	Tot	Class	Len	Wid	Asp	Analyte	Elements	Comment
G2	34	G7	AX	200	201	F	7.8	0.38	20.5	Tremolite		
G2	27	H4	AX	167	168	F	7.5	0.55	13.6	Tremolite		
G2	35	I7	AX	205	206	F	11.2	0.4	28	Tremolite		
G2	27	H4	AX	163	164	F	8	1.2	6.7	Tremolite		
G2	34	G7	AX	202	203	F	5.12	1.7	3	Tremolite		
G2	22	C2	AX	131	132	F	5.12	0.45	11.4	Tremolite		
G2	28	F4	AX	169	170	F	20	0.85	23.5	Tremolite		
G2	21	A2	AX	119	120	F	10	0.6	16.7	Tremolite		
G2	22	C2	AX	124	125	F	9	1	9	Tremolite		
G2	22	C2	AX	125	126	F	5.4	0.6	9	Tremolite		
G2	22	C2	AX	129	130	F	15	2.5	6	Tremolite		
G2	21	A2	AX	117		MD 1-0	9	3	3	Tremolite		
G2	22	C2	AX	133	134	F	12	2.5	4.8	Tremolite		
G2	23	E2	AX	137	138	F	5.25	1.35	3.9	Tremolite		
G2	23	E2	AX	142	143	F	15	1.8	8.3	Tremolite		
G2	26	J4	AX	159	160	F	9	0.3	30	Tremolite		
G2	24	G2	AX	145	146	F	16.8	0.38	44.2	Tremolite		
G2	25	I2	AX	148	149	F	9.5	1.2	7.9	Tremolite		
G2	25	I2	AX	150	151	F	7.2	0.85	8.5	Tremolite		
G2	25	I2	AX	151	152	F	10	1.7	5.9	Tremolite		
G2	25	I2	AX	154	155	F	9	3	3	Tremolite		
G2	25	I2	AX	156	157	F	5.25	0.75	7	Tremolite		
G2	26	J4	AX	158	159	F	5.7	1.2	4.7	Tremolite		
G2	24	G2	AX	144	145	F	11.85	0.885	13.4	Tremolite		
G2	22	C2	AX	128	129	F	7.7	0.45	17.1	Tremolite		
G2	26	J4	AX	160	161	F	6.2	1.12	5.5	Tremolite		

Asbestos Structures >5um and 3:1	257.1	Not Applicable	Not Applicable	81

Gr	No.	Loc.	ID	Prim	Tot	Class	Len	Wid	Asp	Analyte	Elements	Comment
G1	12	C7	AX	71		MD 1-1	11	7	1.6	Tremolite		
G1	12	C7	AX	70		MD 1-1	6	2.8	2.1	Tremolite		
G1	12	C7	AX	69		CD 2-1	14.3	1.5	9.5	Tremolite		
G1	10	B4	AX	60	60	F	10.6	0.8	13.2	Tremolite		
G1	9	D4	AX	58	58	F	9	1.2	7.5	Tremolite		
G1	9	D4	AX	57	57	F	10.7	0.6	17.8	Tremolite		

Lab/Cor, Inc.
7619 6th Ave Nw
Seattle, WA 98117

Phone: (206) 781-0155
Fax: (206) 789-8424
http://www.labcor.net

A Professional Service Corporation in the Northwest

ISO 10312, Direct Count Categories

Job Number: 070434 **SEA** **Report Number:** 070434R06
Client: Idaho National Laboratory **Date Received:** 4/23/2007
Project Name: RARE

Lab/Cor Sample No.: S28
Client Sample No.: FB-2-R3
Description:
Filter Fraction: 1 **Aliquot Dilution:** 0
Residual Ash Vol: **Final Dilution:** 0

Volume (L): 0
Lab Filter Area (mm2): 385
Grid Openings Analyzed: 35
Average Grid Opening Area: 0.009
Area Analyzed (mm2): 0.315
Analytical Sens. (struc/cc): 0
Dectection Limit. (struc/cc): 0

Structure Type	Filter Density (s/mm2)	Concen-tration (struc/cc)	95% Confidence Interval (struc/cc)	Structure Count[1] Prim/Total
Asbestos Structures >5um and 3:1	257.1	Not Applicable	Not Applicable	81

Gr	No.	Loc.	ID	Prim	Tot	Class	Len	Wid	Asp	Analyte	Elements	Comment
G1	9	D4	AX	56	56	F	7.2	1.25	5.8	Tremolite		
G1	20	B9	AX	112		MD 1-0	11	9	1.2	Tremolite		
G1	13	E7	AX	77	78	F	5.25	0.5	10.5	Tremolite		
G1	8	F4	AX	53	53	F	7.85	1	7.8	Tremolite		
G1	14	G7	AX	82	83	F	9.5	1.2	7.9	Tremolite		
G1	14	G7	AX	84	85	F	8	1.25	6.4	Tremolite		
G1	15	I7	AX	88	89	F	5.5	0.65	8.5	Tremolite		
G1	15	I7	AX	89	90	F	5.3	0.35	15.1	Tremolite		
G1	15	I7	AX	90	91	F	6.2	1.1	5.6	Tremolite		
G1	15	I7	AX	91	92	F	9.2	0.8	11.5	Tremolite		
G1	16	J9	AX	95	96	F	12.5	1.75	7.1	Tremolite		
G1	17	H9	AX	99	100	F	11	1.25	8.8	Tremolite		
G1	18	F9	AX	107	108	F	55	2.2	25	Tremolite		
G1	7	H4	AX	46		MD 1-0	6.5	4	1.6	Tremolite		
G1	17	H9	AX	102		MD 1-1	11	10	1.1	Tremolite		
G1	2	C2	AQ	10	10	F	7.75	1.12	6.9	Tremolite		
G1	7	H4	AX	47	47	F	15	2.75	5.5	Tremolite		
G1	8	F4	AX	50	50	F	20	2.5	8	Tremolite		
G1	1	A2	AQ	6	6	F	8	0.7	11.4	Tremolite		
G1	1	A2	AZQ	3	3	F	7	0.65	10.8	Tremolite	Mg, Al, Si, Ca, Fe	
G1	2	C2	AD	11	11	F	10.5	0.7	15	Tremolite		
G1	2	C2	AQ	8	8	F	6.35	0.45	14.1	Tremolite		
G1	1	A2	AQ	4	4	F	17	1.1	15.5	Tremolite		
G1	3	E2	AD	15	15	F	13	0.75	17.3	Tremolite		
G1	3	E2	AD	17	17	F	7.58	1	7.6	Tremolite		
G1	5	I2	AD	33	33	F	5.5	0.65	8.5	Tremolite		
G1	7	H4	AD	43	43	F	9.5	0.65	14.6	Tremolite		
G1	2	C2	AD	12		MD 1-0	7	6	1.2	Tremolite		
G1	6	J4	AD	39	39	F	12.5	0.65	19.2	Tremolite		
G1	3	E2	AD	18	18	F	5.7	0.8	7.1	Tremolite		
G1	5	I2	AD	32	32	F	12.5	0.85	14.7	Tremolite		
G1	5	I2	AD	30	30	F	23	4	5.8	Tremolite		
G1	4	G2	AD	24	24	F	9.8	1.65	5.9	Tremolite		
G1	4	G2	AD	23		MD 1-0	6	1.5	4	Tremolite		

Lab/Cor, Inc.
7619 6th Ave Nw
Seattle, WA 98117

Phone: (206) 781-0155
Fax: (206) 789-8424
http://www.labcor.net

A Professional Service Corporation in the Northwest

ISO 10312, Direct Count Categories

Job Number: 070434 **SEA** **Report Number:** 070434R06
Client: Idaho National Laboratory **Date Received:** 4/23/2007
Project Name: RARE

Lab/Cor Sample No.: S28
Client Sample No.: FB-2-R3
Description:
Filter Fraction: 1 **Aliquot Dilution:** 0
Residual Ash Vol: **Final Dilution:** 0

Volume (L): 0
Lab Filter Area (mm2): 385
Grid Openings Analyzed: 35
Average Grid Opening Area: 0.009
Area Analyzed (mm2): 0.315
Analytical Sens. (struc/cc): 0
Dectection Limit. (struc/cc): 0

Structure Type	Filter Density (s/mm2)	Concen-tration (struc/cc)	95% Confidence Interval (struc/cc)	Structure Count[1] Prim/Total
Asbestos Structures >5um and 3:1	257.1	Not Applicable	Not Applicable	81

Gr	No.	Loc.	ID	Prim	Tot	Class	Len	Wid	Asp	Analyte	Elements	Comment
G1	4	G2	AD	21	21	F	6	1	6	Tremolite		
G1	3	E2	AD	20	20	F	7	0.45	15.6	Tremolite		
G2	31	A7	AX	187	188	F	10	1.8	5.6	Tremolite		
G2	28	F4	AX	170	171	F	5.5	0.8	6.9	Tremolite		
G2	29	D4	AX	175	176	F	12.2	1.2	10.2	Tremolite		
G2	29	D4	AX	177	178	F	8	1.2	6.7	Tremolite		
G2	30	B4	AX	180	181	F	10.65	1.5	7.1	Tremolite		
G2	31	A7	AX	183	184	F	7.15	1.1	6.5	Tremolite		
G2	31	A7	AX	186	187	F	19	1.5	12.7	Tremolite		
G2	27	H4	AX	167	168	F	7.5	0.55	13.6	Tremolite		
G2	31	A7	AX	188	189	F	10.1	1.25	8.1	Tremolite		
G2	31	A7	AX	189	190	F	30	3	10	Tremolite		
G2	33	E7	AX	194	195	F	9.2	0.6	15.3	Tremolite		
G2	33	E7	AX	195	196	F	14	1.2	11.7	Tremolite		
G2	33	E7	AX	197		MD 1-1	6.8	5.5	1.2	Tremolite		
G2	33	E7	AX	198	199	F	7	0.8	8.8	Tremolite		
G2	34	G7	AX	200	201	F	7.8	0.38	20.5	Tremolite		
G2	34	G7	AX	201		MD 1-0	11	7	1.6	Tremolite		
G2	35	I7	AX	209		MD 1-1	10	9	1.1	Tremolite		
G2	27	H4	AX	164		MD 1-0	7	2.8	2.5	Tremolite		
G2	35	I7	AX	205	206	F	11.2	0.4	28	Tremolite		
G2	22	C2	AX	128	129	F	7.7	0.45	17.1	Tremolite		
G2	28	F4	AX	169	170	F	20	0.85	23.5	Tremolite		
G2	27	H4	AX	163	164	F	8	1.2	6.7	Tremolite		
G2	21	A2	AX	117		MD 1-0	9	3	3	Tremolite		
G2	21	A2	AX	119	120	F	10	0.6	16.7	Tremolite		
G2	22	C2	AX	125	126	F	5.4	0.6	9	Tremolite		
G2	22	C2	AX	129	130	F	15	2.5	6	Tremolite		
G2	22	C2	AX	131	132	F	5.12	0.45	11.4	Tremolite		
G2	23	E2	AX	138		MD 1-1	20	12	1.7	Tremolite		
G2	23	E2	AX	142	143	F	15	1.8	8.3	Tremolite		
G2	26	J4	AX	159	160	F	9	0.3	30	Tremolite		
G2	24	G2	AX	144	145	F	11.85	0.885	13.4	Tremolite		
G2	24	G2	AX	145	146	F	16.8	0.38	44.2	Tremolite		

Lab/Cor, Inc.
7619 6th Ave Nw
Seattle, WA 98117

Phone: (206) 781-0155
Fax: (206) 789-8424
http://www.labcor.net

A Professional Service Corporation in the Northwest

ISO 10312, Direct Count Categories

Job Number: 070434 **SEA** **Report Number:** 070434R06
Client: Idaho National Laboratory **Date Received:** 4/23/2007
Project Name: RARE

Lab/Cor Sample No.: S28
Client Sample No.: FB-2-R3
Description:
Filter Fraction: 1 **Aliquot Dilution:** 0
Residual Ash Vol: **Final Dilution:** 0

Volume (L): 0
Lab Filter Area (mm2): 385
Grid Openings Analyzed: 35
Average Grid Opening Area: 0.009
Area Analyzed (mm2): 0.315
Analytical Sens. (struc/cc): 0
Dectection Limit. (struc/cc): 0

Structure Type	Filter Density (s/mm2)	Concen-tration (struc/cc)	95% Confidence Interval (struc/cc)	Structure Count[1] Prim/Total
Asbestos Structures >5um and 3:1	257.1	Not Applicable	Not Applicable	81

Gr	No.	Loc.	ID	Prim	Tot	Class	Len	Wid	Asp	Analyte	Elements	Comment
G2	25	I2	AX	148	149	F	9.5	1.2	7.9	Tremolite		
G2	25	I2	AX	150	151	F	7.2	0.85	8.5	Tremolite		
G2	25	I2	AX	151	152	F	10	1.7	5.9	Tremolite		
G2	25	I2	AX	156	157	F	5.25	0.75	7	Tremolite		
G2	24	G2	AX	143		MD 1-0	6.5	5.8	1.1	Tremolite		
G2	22	C2	AX	124	125	F	9	1	9	Tremolite		
G2	26	J4	AX	160	161	F	6.2	1.12	5.5	Tremolite		

Asbestos Fibers and Bundles > 5um and 3:1		Not Applicable	Not Applicable		73

Gr	No.	Loc.	ID	Prim	Tot	Class	Len	Wid	Asp	Analyte	Elements	Comment
G1	5	I2	AD	30	30	F	23	4	5.8	Tremolite		
G1	5	I2	AD	32	32	F	12.5	0.85	14.7	Tremolite		
G1	5	I2	AD	33	33	F	5.5	0.65	8.5	Tremolite		
G1	6	J4	AD	39	39	F	12.5	0.65	19.2	Tremolite		
G1	7	H4	AD	43	43	F	9.5	0.65	14.6	Tremolite		
G1	7	H4	AX	47	47	F	15	2.75	5.5	Tremolite		
G1	8	F4	AX	50	50	F	20	2.5	8	Tremolite		
G1	12	C7	AX		71	MF	6	0.85	7.1	Tremolite		
G1	4	G2	AD	24	24	F	9.8	1.65	5.9	Tremolite		
G1	1	A2	AQ	4	4	F	17	1.1	15.5	Tremolite		
G1	8	F4	AX	53	53	F	7.85	1	7.8	Tremolite		
G1	4	G2	AD	21	21	F	6	1	6	Tremolite		
G1	3	E2	AD	20	20	F	7	0.45	15.6	Tremolite		
G1	3	E2	AD	18	18	F	5.7	0.8	7.1	Tremolite		
G1	3	E2	AD	17	17	F	7.58	1	7.6	Tremolite		
G1	3	E2	AD	15	15	F	13	0.75	17.3	Tremolite		
G1	2	C2	AQ	10	10	F	7.75	1.12	6.9	Tremolite		
G1	2	C2	AQ	8	8	F	6.35	0.45	14.1	Tremolite		
G1	2	C2	AD	11	11	F	10.5	0.7	15	Tremolite		
G1	1	A2	AQ	6	6	F	8	0.7	11.4	Tremolite		
G1	9	D4	AX	56	56	F	7.2	1.25	5.8	Tremolite		
G1	1	A2	AZQ	3	3	F	7	0.65	10.8	Tremolite	Mg, Al, Si, Ca, Fe	
G1	18	F9	AX	107	108	F	55	2.2	25	Tremolite		
G1	9	D4	AX	57	57	F	10.7	0.6	17.8	Tremolite		
G1	17	H9	AX	99	100	F	11	1.25	8.8	Tremolite		

Lab/Cor, Inc.
7619 6th Ave Nw
Seattle, WA 98117

Phone: (206) 781-0155
Fax: (206) 789-8424
http://www.labcor.net

A Professional Service Corporation in the Northwest

ISO 10312, Direct Count Categories

Job Number: 070434 **SEA**
Report Number: 070434R06
Client: Idaho National Laboratory
Date Received: 4/23/2007
Project Name: RARE

Lab/Cor Sample No.: S28
Client Sample No.: FB-2-R3
Description:
Filter Fraction: 1
Residual Ash Vol:
Aliquot Dilution: 0
Final Dilution: 0
Volume (L): 0
Lab Filter Area (mm2): 385
Grid Openings Analyzed: 35
Average Grid Opening Area: 0.009
Area Analyzed (mm2): 0.315
Analytical Sens. (struc/cc): 0
Dectection Limit. (struc/cc): 0

Structure Type	Filter Density (s/mm2)	Concen-tration (struc/cc)	95% Confidence Interval (struc/cc)	Structure Count[1] Prim/Total
Asbestos Fibers and Bundles > 5um and 3:1		Not Applicable	Not Applicable	73

Gr	No.	Loc.	ID	Prim	Tot	Class	Len	Wid	Asp	Analyte	Elements	Comment
G1	17	H9	AX		103	MF	6.5	1.2	5.4	Tremolite		
G1	16	J9	AX	95	96	F	12.5	1.75	7.1	Tremolite		
G1	15	I7	AX	91	92	F	9.2	0.8	11.5	Tremolite		
G1	15	I7	AX	90	91	F	6.2	1.1	5.6	Tremolite		
G1	15	I7	AX	89	90	F	5.3	0.35	15.1	Tremolite		
G1	9	D4	AX	58	58	F	9	1.2	7.5	Tremolite		
G1	14	G7	AX	84	85	F	8	1.25	6.4	Tremolite		
G1	14	G7	AX	82	83	F	9.5	1.2	7.9	Tremolite		
G1	13	E7	AX	77	78	F	5.25	0.5	10.5	Tremolite		
G1	12	C7	AX		72	MB	9.8	1.35	7.3	Tremolite		
G1	10	B4	AX	60	60	F	10.6	0.8	13.2	Tremolite		
G1	12	C7	AX		69	CF	14.3	0.6	23.8	Tremolite		
G1	15	I7	AX	88	89	F	5.5	0.65	8.5	Tremolite		
G2	31	A7	AX	186	187	F	19	1.5	12.7	Tremolite		
G2	30	B4	AX	180	181	F	10.65	1.5	7.1	Tremolite		
G2	29	D4	AX	177	178	F	8	1.2	6.7	Tremolite		
G2	29	D4	AX	175	176	F	12.2	1.2	10.2	Tremolite		
G2	31	A7	AX	188	189	F	10.1	1.25	8.1	Tremolite		
G2	28	F4	AX	169	170	F	20	0.85	23.5	Tremolite		
G2	34	G7	AX	200	201	F	7.8	0.38	20.5	Tremolite		
G2	28	F4	AX	170	171	F	5.5	0.8	6.9	Tremolite		
G2	31	A7	AX	189	190	F	30	3	10	Tremolite		
G2	33	E7	AX		198	MF	5.1	0.27	18.9	Tremolite		
G2	33	E7	AX	194	195	F	9.2	0.6	15.3	Tremolite		
G2	35	I7	AX	205	206	F	11.2	0.4	28	Tremolite		
G2	33	E7	AX	198	199	F	7	0.8	8.8	Tremolite		
G2	35	I7	AX		210	MF	9	0.6	15	Tremolite		
G2	27	H4	AX	167	168	F	7.5	0.55	13.6	Tremolite		
G2	31	A7	AX	183	184	F	7.15	1.1	6.5	Tremolite		
G2	33	E7	AX	195	196	F	14	1.2	11.7	Tremolite		
G2	22	C2	AX	128	129	F	7.7	0.45	17.1	Tremolite		
G2	31	A7	AX	187	188	F	10	1.8	5.6	Tremolite		
G2	27	H4	AX	163	164	F	8	1.2	6.7	Tremolite		
G2	21	A2	AX	119	120	F	10	0.6	16.7	Tremolite		

Lab/Cor, Inc.
7619 6th Ave Nw
Seattle, WA 98117

Phone: (206) 781-0155
Fax: (206) 789-8424
http://www.labcor.net

A Professional Service Corporation in the Northwest

ISO 10312, Direct Count Categories

Job Number: 070434 **SEA** **Report Number:** 070434R06
Client: Idaho National Laboratory **Date Received:** 4/23/2007
Project Name: RARE

Lab/Cor Sample No.: S28
Client Sample No.: FB-2-R3
Description:
Filter Fraction: 1 **Aliquot Dilution:** 0
Residual Ash Vol: **Final Dilution:** 0

Volume (L): 0
Lab Filter Area (mm2): 385
Grid Openings Analyzed: 35
Average Grid Opening Area: 0.009
Area Analyzed (mm2): 0.315
Analytical Sens. (struc/cc): 0
Dectection Limit. (struc/cc): 0

Structure Type	Filter Density (s/mm2)	Concen-tration (struc/cc)	95% Confidence Interval (struc/cc)	Structure Count[1] Prim/Total
Asbestos Fibers and Bundles > 5um and 3:1		Not Applicable	Not Applicable	73

Gr	No.	Loc.	ID	Prim	Tot	Class	Len	Wid	Asp	Analyte	Elements	Comment
G2	22	C2	AX	125	126	F	5.4	0.6	9	Tremolite		
G2	22	C2	AX	129	130	F	15	2.5	6	Tremolite		
G2	22	C2	AX	131	132	F	5.12	0.45	11.4	Tremolite		
G2	23	E2	AX		139	MF	6	0.3	20	Tremolite		
G2	23	E2	AX	142	143	F	15	1.8	8.3	Tremolite		
G2	24	G2	AX	144	145	F	11.85	0.885	13.4	Tremolite		
G2	26	J4	AX	159	160	F	9	0.3	30	Tremolite		
G2	25	I2	AX	148	149	F	9.5	1.2	7.9	Tremolite		
G2	25	I2	AX	150	151	F	7.2	0.85	8.5	Tremolite		
G2	25	I2	AX	151	152	F	10	1.7	5.9	Tremolite		
G2	25	I2	AX	156	157	F	5.25	0.75	7	Tremolite		
G2	24	G2	AX	145	146	F	16.8	0.38	44.2	Tremolite		
G2	22	C2	AX	124	125	F	9	1	9	Tremolite		
G2	26	J4	AX	160	161	F	6.2	1.12	5.5	Tremolite		

Lab/Cor, Inc.
7619 6th Ave Nw
Seattle, WA 98117

Phone: (206) 781-0155
Fax: (206) 789-8424
http://www.labcor.net

A Professional Service Corporation in the Northwest

ISO 10312, Direct Count Categories

Job Number: 070434 **SEA**
Client: Idaho National Laboratory
Project Name: RARE

Report Number: 070434R06
Date Received: 4/23/2007

Lab/Cor Sample No.: S29
Client Sample No.: FB-2-R4
Description:
Filter Fraction: 1
Residual Ash Vol:

Aliquot Dilution: 0
Final Dilution: 0

Volume (L): 0
Lab Filter Area (mm2): 385
Grid Openings Analyzed: 35
Average Grid Opening Area: 0.009
Area Analyzed (mm2): 0.315
Analytical Sens. (struc/cc): 0
Dectection Limit. (struc/cc): 0

Structure Type	Filter Density (s/mm2)	Concen-tration (struc/cc)	95% Confidence Interval (struc/cc)	Structure Count[1] Prim/Total
PCM Equivalent Fibers-ISO		Not Applicable	Not Applicable	102

Gr	No.	Loc.	ID	Prim	Tot	Class	Len	Wid	Asp	Analyte	Elements	Comment
G1	14	G7	AX	85	90	F	7	0.75	9.3	Tremolite		
G1	14	G7	AX	83	88	F	12	0.6	20	Tremolite		
G1	14	G7	AX	82	87	F	26	1.5	17.3	Tremolite		
G1	13	E7	AX	81	86	F	5.1	1.5	3.4	Tremolite		
G1	13	E7	AX		83	MF	7	0.5	14	Tremolite		
G1	12	C7	AX	76	81	F	8.6	0.5	17.2	Tremolite		
G1	12	C7	AX	74	79	F	12	1.2	10	Tremolite		
G1	11	A7	AX		76	MF	9.7	0.5	19.4	Tremolite		
G1	11	A7	AX		73	MF	21.5	0.5	43	Tremolite		
G1	15	I7	AX	86	91	F	5.65	1.45	3.9	Tremolite		
G1	18	F9	AX	107	114	F	14	2.6	5.4	Tremolite		
G1	9	D4	AX	60	64	F	13.2	2.7	4.9	Tremolite		
G1	10	B4	AX	64	68	F	15	0.7	21.4	Tremolite		
G1	11	A7	AX	72	77	F	7	0.55	12.7	Tremolite		
G1	16	J9	AX		99	CF	16.85	1.5	11.2	Tremolite		
G1	16	J9	AX		100	CF	16.5	0.8	20.6	Tremolite		
G1	16	J9	AX	91	96	F	7.75	1.8	4.3	Tremolite		
G1	16	J9	AX	92	97	F	7	0.38	18.4	Tremolite		
G1	16	J9	AX	93	98	F	6.2	1.2	5.2	Tremolite		
G1	16	J9	AX	95	101	F	14	2	7	Tremolite		
G1	16	J9	AX	96	102	F	9.5	2	4.8	Tremolite		
G1	16	J9	AX	99	106	F	5.55	0.7	7.9	Tremolite		
G1	18	F9	AX		116	CB	6.8	1.85	3.7	Tremolite		
G1	19	D9	AX	114	122	F	5.2	0.75	6.9	Tremolite		
G1	20	B9	AX	117	125	F	6	0.55	10.9	Tremolite		
G1	20	B9	AX	118	126	F	13	3	4.3	Tremolite		
G1	9	D4	AX	59	63	F	7.65	1.1	7	Tremolite		
G1	12	C7	AX	75	80	F	6.12	0.55	11.1	Tremolite		
G1	17	H9	AX	100	107	F	22	1.75	12.6	Tremolite		
G1	2	C2	AX	10	11	F	10.85	0.8	13.6	Tremolite		
G1	5	I2	AX	33	34	F	6	0.7	8.6	Tremolite		
G1	5	I2	AX	32	33	F	15.25	1	15.2	Tremolite		
G1	5	I2	AX	30	31	F	19	2	9.5	Tremolite		
G1	3	E2	AX	18	19	F	5.85	1	5.8	Tremolite		

Lab/Cor, Inc.
7619 6th Ave Nw
Seattle, WA 98117

Phone: (206) 781-0155
Fax: (206) 789-8424
http://www.labcor.net

A Professional Service Corporation in the Northwest

ISO 10312, Direct Count Categories

Job Number: 070434 **SEA** **Report Number:** 070434R06
Client: Idaho National Laboratory **Date Received:** 4/23/2007
Project Name: RARE

Lab/Cor Sample No.: S29
Client Sample No.: FB-2-R4
Description:
Filter Fraction: 1 **Aliquot Dilution:** 0
Residual Ash Vol: **Final Dilution:** 0

Volume (L): 0
Lab Filter Area (mm2): 385
Grid Openings Analyzed: 35
Average Grid Opening Area: 0.009
Area Analyzed (mm2): 0.315
Analytical Sens. (struc/cc): 0
Dectection Limit. (struc/cc): 0

Structure Type	Filter Density (s/mm2)	Concen-tration (struc/cc)	95% Confidence Interval (struc/cc)	Structure Count[1] Prim/Total
PCM Equivalent Fibers-ISO		Not Applicable	Not Applicable	102

Gr	No.	Loc.	ID	Prim	Tot	Class	Len	Wid	Asp	Analyte	Elements	Comment
G1	3	E2	AX	17	18	F	6.5	1.5	4.3	Tremolite		
G1	6	J4	AX	37	38	F	5.7	0.8	7.1	Tremolite		
G1	2	C2	AX	12	13	F	5.4	0.6	9	Tremolite		
G1	2	C2	AX	9	10	F	22.5	1.5	15	Tremolite		
G1	2	C2	AX	4	4	F	5.35	0.65	8.2	Tremolite		
G1	2	C2	AX		7	MF	13.2	0.5	26.4	Tremolite		
G1	2	C2	AX		3	MF	5.75	1.2	4.8	Tremolite		
G1	2	C2	ADQ	13	14	F	9.8	1.2	8.2	Tremolite	Mg, Al, Si, Ca, Fe	
G1	9	D4	AX		66	MF	6	0.8	7.5	Tremolite		
G1	12	C7	AX	77	82	F	9.8	0.85	11.5	Tremolite		
G1	2	C2	AX	15	16	F	7	0.2	35	Tremolite		
G1	8	F4	AX	55	59	F	6.2	1.2	5.2	Tremolite		
G1	2	C2	AX		8	MF	5.1	0.25	20.4	Tremolite		
G1	7	H4	AX	40	41	F	7	0.55	12.7	Tremolite		
G1	8	F4	AX	54	58	F	13.5	1.8	7.5	Tremolite		
G1	8	F4	AX	51	52	F	21.7	1.8	12.1	Tremolite		
G1	8	F4	AX	50	51	F	6.75	2	3.4	Tremolite		
G1	8	F4	AX		55	CF	5.5	0.55	10	Tremolite		
G1	7	H4	AX	43	44	F	6.1	1.2	5.1	Tremolite		
G1	8	F4	AX		54	CF	9	0.75	12	Tremolite		
G1	8	F4	AX	56	60	F	5.6	0.7	8	Tremolite		
G1	7	H4	AX	46	47	F	6	1.25	4.8	Tremolite		
G1	1	A2	AQ	2	2	F	17.5	2	8.8	Tremolite	Mg, Al, Si, Ca, Fe	
G1	7	H4	AX	41	42	F	54	1.2	45	Tremolite		
G1	8	F4	AX	53	57	F	7.75	0.65	11.9	Tremolite		
G1	7	H4	AX	42	43	F	7.5	1.35	5.6	Tremolite		
G2	30	B4	AX	168	176	F	5.6	1	5.6	Tremolite		
G2	30	B4	AX	165	173	F	7.7	1.5	5.1	Tremolite		
G2	29	D4	AX	163	171	F	10	2	5	Tremolite		
G2	29	D4	AX	162	170	F	10.5	1.2	8.8	Tremolite		
G2	29	D4	AX	158	166	F	5.8	1	5.8	Tremolite		
G2	31	A7	AX	171	179	F	5.8	1.25	4.6	Tremolite		
G2	33	E7	AX	186	195	F	11.2	0.85	13.2	Tremolite		
G2	28	F4	AX	156	164	F	12	2	6	Tremolite		

Lab/Cor, Inc.
7619 6th Ave Nw
Seattle, WA 98117

Phone: (206) 781-0155
Fax: (206) 789-8424
http://www.labcor.net

A Professional Service Corporation in the Northwest

ISO 10312, Direct Count Categories

Job Number: 070434 **SEA** **Report Number:** 070434R06
Client: Idaho National Laboratory **Date Received:** 4/23/2007
Project Name: RARE

Lab/Cor Sample No.: S29
Client Sample No.: FB-2-R4
Description:
Filter Fraction: 1 **Aliquot Dilution:** 0
Residual Ash Vol: **Final Dilution:** 0

Volume (L): 0
Lab Filter Area (mm2): 385
Grid Openings Analyzed: 35
Average Grid Opening Area: 0.009
Area Analyzed (mm2): 0.315
Analytical Sens. (struc/cc): 0
Dectection Limit. (struc/cc): 0

Structure Type	Filter Density (s/mm2)	Concen-tration (struc/cc)	95% Confidence Interval (struc/cc)	Structure Count[1] Prim/Total
PCM Equivalent Fibers-ISO		Not Applicable	Not Applicable	102

Gr	No.	Loc.	ID	Prim	Tot	Class	Len	Wid	Asp	Analyte	Elements	Comment
G2	29	D4	AX	160	168	F	18.5	1.2	15.4	Tremolite		
G2	32	C7	AX		182	CF	5.75	1	5.8	Tremolite		
G2	32	C7	AX	172	180	F	6.55	0.4	16.4	Tremolite		
G2	32	C7	AX	176	185	F	6.2	1.85	3.4	Tremolite		
G2	32	C7	AX	177	186	F	5.6	1.2	4.7	Tremolite		
G2	33	E7	AX	183	192	F	17.2	1.8	9.6	Tremolite		
G2	33	E7	AX	185	194	B	40	3	13.3	Tremolite		
G2	34	G7	AX	189	198	F	14	0.75	18.7	Tremolite		
G2	34	G7	AX	191	200	F	10.5	1.85	5.7	Tremolite		
G2	27	H4	AX	153	161	F	10.65	1.2	8.9	Tremolite		
G2	26	J4	AX	145	153	F	10.5	1.2	8.8	Tremolite		
G2	35	I7	AX	194	203	F	5.25	0.7	7.5	Tremolite		
G2	33	E7	AX	184	193	F	5.5	0.8	6.9	Tremolite		
G2	22	C2	AX	126	134	F	7.7	2	3.8	Tremolite		
G2	27	H4	AX	148	156	F	11	0.38	28.9	Tremolite		
G2	27	H4	AX	152	160	F	10.7	0.65	16.5	Tremolite		
G2	21	A2	AX	119	127	F	7.5	0.45	16.7	Tremolite		
G2	22	C2	AX	122	130	F	6	1.25	4.8	Tremolite		
G2	22	C2	AX	125	133	F	14.2	1.8	7.9	Tremolite		
G2	22	C2	AX	127	135	F	7	1.1	6.4	Tremolite		
G2	22	C2	AX	128	136	F	12	0.65	18.5	Tremolite		
G2	23	E2	AX	129	137	F	6.85	1.8	3.8	Tremolite		
G2	23	E2	AX	130	138	F	7.5	1.5	5	Tremolite		
G2	25	I2	AX	142	150	F	12.7	0.65	19.5	Tremolite		
G2	27	H4	AX	149	157	F	14.35	1.28	11.2	Tremolite		
G2	22	C2	AX	124	132	F	5.1	1	5.1	Tremolite		
G2	23	E2	AX	132	140	F	7.2	0.75	9.6	Tremolite		
G2	26	J4	AX	143	151	F	6.5	1.2	5.4	Tremolite		
G2	26	J4	AX	147	155	F	23.2	1.2	19.3	Tremolite		
G2	25	I2	AX	140	148	F	7.2	0.8	9	Tremolite		
G2	25	I2	AX	139	147	F	20.8	1.2	17.3	Tremolite		
G2	24	G2	AX	138	146	F	17	1.5	11.3	Tremolite		
G2	24	G2	AX	137	145	F	5.2	1.12	4.6	Tremolite		
G2	24	G2	AX	135	143	F	13	0.4	32.5	Tremolite		

Lab/Cor, Inc.
7619 6th Ave Nw
Seattle, WA 98117

Phone: (206) 781-0155
Fax: (206) 789-8424
http://www.labcor.net

A Professional Service Corporation in the Northwest

ISO 10312, Direct Count Categories

Job Number: 070434 **SEA** **Report Number:** 070434R06
Client: Idaho National Laboratory **Date Received:** 4/23/2007
Project Name: RARE

Lab/Cor Sample No.: S29
Client Sample No.: FB-2-R4
Description:
Filter Fraction: 1 **Aliquot Dilution:** 0
Residual Ash Vol: **Final Dilution:** 0

Volume (L): 0
Lab Filter Area (mm2): 385
Grid Openings Analyzed: 35
Average Grid Opening Area: 0.009
Area Analyzed (mm2): 0.315
Analytical Sens. (struc/cc): 0
Dectection Limit. (struc/cc): 0

Structure Type	Filter Density (s/mm2)	Concen-tration (struc/cc)	95% Confidence Interval (struc/cc)	Structure Count[1] Prim/Total
PCM Equivalent Structures-ISO	288.9	Not Applicable	Not Applicable	91

Gr	No.	Loc.	ID	Prim	Tot	Class	Len	Wid	Asp	Analyte	Elements	Comment
G1	14	G7	AX	83	88	F	12	0.6	20	Tremolite		
G1	12	C7	AX	76	81	F	8.6	0.5	17.2	Tremolite		
G1	13	E7	AX	81	86	F	5.1	1.5	3.4	Tremolite		
G1	12	C7	AX	77	82	F	9.8	0.85	11.5	Tremolite		
G1	14	G7	AX	82	87	F	26	1.5	17.3	Tremolite		
G1	12	C7	AX	75	80	F	6.12	0.55	11.1	Tremolite		
G1	12	C7	AX	74	79	F	12	1.2	10	Tremolite		
G1	11	A7	AX	72	77	F	7	0.55	12.7	Tremolite		
G1	9	D4	AX	60	64	F	13.2	2.7	4.9	Tremolite		
G1	14	G7	AX	85	90	F	7	0.75	9.3	Tremolite		
G1	20	B9	AX	118	126	F	13	3	4.3	Tremolite		
G1	10	B4	AX	64	68	F	15	0.7	21.4	Tremolite		
G1	15	I7	AX	86	91	F	5.65	1.45	3.9	Tremolite		
G1	16	J9	AX	91	96	F	7.75	1.8	4.3	Tremolite		
G1	16	J9	AX	92	97	F	7	0.38	18.4	Tremolite		
G1	16	J9	AX	93	98	F	6.2	1.2	5.2	Tremolite		
G1	16	J9	AX	95	101	F	14	2	7	Tremolite		
G1	16	J9	AX	96	102	F	9.5	2	4.8	Tremolite		
G1	16	J9	AX	99	106	F	5.55	0.7	7.9	Tremolite		
G1	17	H9	AX	100	107	F	22	1.75	12.6	Tremolite		
G1	18	F9	AX	107	114	F	14	2.6	5.4	Tremolite		
G1	20	B9	AX	117	125	F	6	0.55	10.9	Tremolite		
G1	5	I2	AX	30	31	F	19	2	9.5	Tremolite		
G1	9	D4	AX	59	63	F	7.65	1.1	7	Tremolite		
G1	19	D9	AX	114	122	F	5.2	0.75	6.9	Tremolite		
G1	2	C2	AX	9	10	F	22.5	1.5	15	Tremolite		
G1	8	F4	AX	56	60	F	5.6	0.7	8	Tremolite		
G1	2	C2	ADQ	13	14	F	9.8	1.2	8.2	Tremolite	Mg, Al, Si, Ca, Fe	
G1	2	C2	AX	7		MD 2-2	13.8	2.75	5	Tremolite		
G1	2	C2	AX	10	11	F	10.85	0.8	13.6	Tremolite		
G1	2	C2	AX	11		MD 1-0	6	1.85	3.2	Tremolite		
G1	2	C2	AX	12	13	F	5.4	0.6	9	Tremolite		
G1	2	C2	AX	15	16	F	7	0.2	35	Tremolite		
G1	3	E2	AX	17	18	F	6.5	1.5	4.3	Tremolite		

Lab/Cor, Inc.
7619 6th Ave Nw
Seattle, WA 98117

Phone: (206) 781-0155
Fax: (206) 789-8424
http://www.labcor.net

A Professional Service Corporation in the Northwest

ISO 10312, Direct Count Categories

Job Number: 070434 **SEA**
Report Number: 070434R06
Client: Idaho National Laboratory
Date Received: 4/23/2007
Project Name: RARE

Lab/Cor Sample No.: S29
Client Sample No.: FB-2-R4
Description:
Filter Fraction: 1
Residual Ash Vol:
Aliquot Dilution: 0
Final Dilution: 0
Volume (L): 0
Lab Filter Area (mm2): 385
Grid Openings Analyzed: 35
Average Grid Opening Area: 0.009
Area Analyzed (mm2): 0.315
Analytical Sens. (struc/cc): 0
Dectection Limit. (struc/cc): 0

Structure Type	Filter Density (s/mm2)	Concen-tration (struc/cc)	95% Confidence Interval (struc/cc)	Structure Count[1] Prim/Total
PCM Equivalent Structures-ISO	288.9	Not Applicable	Not Applicable	91

Gr	No.	Loc.	ID	Prim	Tot	Class	Len	Wid	Asp	Analyte	Elements	Comment
G1	3	E2	AX	18	19	F	5.85	1	5.8	Tremolite		
G1	5	I2	AX	33	34	F	6	0.7	8.6	Tremolite		
G1	5	I2	AX	32	33	F	15.25	1	15.2	Tremolite		
G1	8	F4	AX	53	57	F	7.75	0.65	11.9	Tremolite		
G1	2	C2	AX	4	4	F	5.35	0.65	8.2	Tremolite		
G1	1	A2	AQ	2	2	F	17.5	2	8.8	Tremolite	Mg, Al, Si, Ca, Fe	
G1	8	F4	AX	55	59	F	6.2	1.2	5.2	Tremolite		
G1	8	F4	AX	54	58	F	13.5	1.8	7.5	Tremolite		
G1	8	F4	AX	51	52	F	21.7	1.8	12.1	Tremolite		
G1	8	F4	AX	50	51	F	6.75	2	3.4	Tremolite		
G1	7	H4	AX	40	41	F	7	0.55	12.7	Tremolite		
G1	7	H4	AX	43	44	F	6.1	1.2	5.1	Tremolite		
G1	7	H4	AX	42	43	F	7.5	1.35	5.6	Tremolite		
G1	7	H4	AX	41	42	F	54	1.2	45	Tremolite		
G1	7	H4	AX	46	47	F	6	1.25	4.8	Tremolite		
G1	6	J4	AX	37	38	F	5.7	0.8	7.1	Tremolite		
G2	31	A7	AX	171	179	F	5.8	1.25	4.6	Tremolite		
G2	30	B4	AX	168	176	F	5.6	1	5.6	Tremolite		
G2	30	B4	AX	165	173	F	7.7	1.5	5.1	Tremolite		
G2	29	D4	AX	163	171	F	10	2	5	Tremolite		
G2	27	H4	AX	153	161	F	10.65	1.2	8.9	Tremolite		
G2	29	D4	AX	158	166	F	5.8	1	5.8	Tremolite		
G2	32	C7	AX	172	180	F	6.55	0.4	16.4	Tremolite		
G2	34	G7	AX	191	200	F	10.5	1.85	5.7	Tremolite		
G2	27	H4	AX	152	160	F	10.7	0.65	16.5	Tremolite		
G2	29	D4	AX	162	170	F	10.5	1.2	8.8	Tremolite		
G2	32	C7	AX	176	185	F	6.2	1.85	3.4	Tremolite		
G2	32	C7	AX	177	186	F	5.6	1.2	4.7	Tremolite		
G2	33	E7	AX	183	192	F	17.2	1.8	9.6	Tremolite		
G2	33	E7	AX	184	193	F	5.5	0.8	6.9	Tremolite		
G2	33	E7	AX	185	194	B	40	3	13.3	Tremolite		
G2	34	G7	AX	189	198	F	14	0.75	18.7	Tremolite		
G2	35	I7	AX	194	203	F	5.25	0.7	7.5	Tremolite		
G2	27	H4	AX	149	157	F	14.35	1.28	11.2	Tremolite		

Lab/Cor, Inc.
7619 6th Ave Nw
Seattle, WA 98117

Phone: (206) 781-0155
Fax: (206) 789-8424
http://www.labcor.net

A Professional Service Corporation in the Northwest

ISO 10312, Direct Count Categories

Job Number: 070434 **SEA** **Report Number:** 070434R06
Client: Idaho National Laboratory **Date Received:** 4/23/2007
Project Name: RARE

Lab/Cor Sample No.: S29
Client Sample No.: FB-2-R4
Description:
Filter Fraction: 1 **Aliquot Dilution:** 0
Residual Ash Vol: **Final Dilution:** 0

Volume (L): 0
Lab Filter Area (mm2): 385
Grid Openings Analyzed: 35
Average Grid Opening Area: 0.009
Area Analyzed (mm2): 0.315
Analytical Sens. (struc/cc): 0
Dectection Limit. (struc/cc): 0

Structure Type	Filter Density (s/mm2)	Concen-tration (struc/cc)	95% Confidence Interval (struc/cc)	Structure Count[1] Prim/Total
PCM Equivalent Structures-ISO	288.9	Not Applicable	Not Applicable	91

Gr	No.	Loc.	ID	Prim	Tot	Class	Len	Wid	Asp	Analyte	Elements	Comment
G2	28	F4	AX	156	164	F	12	2	6	Tremolite		
G2	33	E7	AX	186	195	F	11.2	0.85	13.2	Tremolite		
G2	22	C2	AX	126	134	F	7.7	2	3.8	Tremolite		
G2	21	A2	AX	119	127	F	7.5	0.45	16.7	Tremolite		
G2	29	D4	AX	160	168	F	18.5	1.2	15.4	Tremolite		
G2	27	H4	AX	148	156	F	11	0.38	28.9	Tremolite		
G2	22	C2	AX	122	130	F	6	1.25	4.8	Tremolite		
G2	22	C2	AX	125	133	F	14.2	1.8	7.9	Tremolite		
G2	22	C2	AX	127	135	F	7	1.1	6.4	Tremolite		
G2	22	C2	AX	128	136	F	12	0.65	18.5	Tremolite		
G2	23	E2	AX	129	137	F	6.85	1.8	3.8	Tremolite		
G2	23	E2	AX	130	138	F	7.5	1.5	5	Tremolite		
G2	23	E2	AX	132	140	F	7.2	0.75	9.6	Tremolite		
G2	26	J4	AX	143	151	F	6.5	1.2	5.4	Tremolite		
G2	24	G2	AX	137	145	F	5.2	1.12	4.6	Tremolite		
G2	24	G2	AX	138	146	F	17	1.5	11.3	Tremolite		
G2	25	I2	AX	139	147	F	20.8	1.2	17.3	Tremolite		
G2	25	I2	AX	140	148	F	7.2	0.8	9	Tremolite		
G2	25	I2	AX	142	150	F	12.7	0.65	19.5	Tremolite		
G2	22	C2	AX	124	132	F	5.1	1	5.1	Tremolite		
G2	26	J4	AX	147	155	F	23.2	1.2	19.3	Tremolite		
G2	26	J4	AX	145	153	F	10.5	1.2	8.8	Tremolite		
G2	24	G2	AX	135	143	F	13	0.4	32.5	Tremolite		

PCM Equivalent Fibers-NIOSH		Not Applicable	Not Applicable	108

Gr	No.	Loc.	ID	Prim	Tot	Class	Len	Wid	Asp	Analyte	Elements	Comment
G1	12	C7	AX	77	82	F	9.8	0.85	11.5	Tremolite		
G1	13	E7	AX		83	MF	7	0.5	14	Tremolite		
G1	13	E7	AX	81	86	F	5.1	1.5	3.4	Tremolite		
G1	14	G7	AX	83	88	F	12	0.6	20	Tremolite		
G1	11	A7	AX	72	77	F	7	0.55	12.7	Tremolite		
G1	14	G7	AX	85	90	F	7	0.75	9.3	Tremolite		
G1	14	G7	AX	82	87	F	26	1.5	17.3	Tremolite		
G1	12	C7	AX	76	81	F	8.6	0.5	17.2	Tremolite		
G1	12	C7	AX	75	80	F	6.12	0.55	11.1	Tremolite		

Lab/Cor, Inc.
7619 6th Ave Nw
Seattle, WA 98117

Phone: (206) 781-0155
Fax: (206) 789-8424
http://www.labcor.net

A Professional Service Corporation in the Northwest

ISO 10312, Direct Count Categories

Job Number: 070434 **SEA** **Report Number:** 070434R06
Client: Idaho National Laboratory **Date Received:** 4/23/2007
Project Name: RARE

Lab/Cor Sample No.: S29
Client Sample No.: FB-2-R4
Description:
Filter Fraction: 1 **Aliquot Dilution:** 0
Residual Ash Vol: **Final Dilution:** 0

Volume (L): 0
Lab Filter Area (mm2): 385
Grid Openings Analyzed: 35
Average Grid Opening Area: 0.009
Area Analyzed (mm2): 0.315
Analytical Sens. (struc/cc): 0
Dectection Limit. (struc/cc): 0

Structure Type	Filter Density (s/mm2)	Concen-tration (struc/cc)	95% Confidence Interval (struc/cc)	Structure Count[1] Prim/Total
PCM Equivalent Fibers-NIOSH		Not Applicable	Not Applicable	108

Gr	No.	Loc.	ID	Prim	Tot	Class	Len	Wid	Asp	Analyte	Elements	Comment
G1	12	C7	AX	74	79	F	12	1.2	10	Tremolite		
G1	11	A7	AX		76	MF	9.7	0.5	19.4	Tremolite		
G1	11	A7	AX		74	CF	13	4	3.2	Tremolite		
G1	15	I7	AX	86	91	F	5.65	1.45	3.9	Tremolite		
G1	11	A7	AX		73	MF	21.5	0.5	43	Tremolite		
G1	18	F9	AX		116	CB	6.8	1.85	3.7	Tremolite		
G1	10	B4	AX	68	72	F	40	4.75	8.4	Tremolite		
G1	16	J9	AX	96	102	F	9.5	2	4.8	Tremolite		
G1	3	E2	AX	17	18	F	6.5	1.5	4.3	Tremolite		
G1	10	B4	AX	64	68	F	15	0.7	21.4	Tremolite		
G1	20	B9	AX	117	125	F	6	0.55	10.9	Tremolite		
G1	19	D9	AX	114	122	F	5.2	0.75	6.9	Tremolite		
G1	19	D9	AX	112	120	F	27	3.5	7.7	Tremolite		
G1	16	J9	AX	99	106	F	5.55	0.7	7.9	Tremolite		
G1	17	H9	AX	100	107	F	22	1.75	12.6	Tremolite		
G1	16	J9	AX		99	CF	16.85	1.5	11.2	Tremolite		
G1	16	J9	AX	95	101	F	14	2	7	Tremolite		
G1	16	J9	AX	93	98	F	6.2	1.2	5.2	Tremolite		
G1	20	B9	AX	118	126	F	13	3	4.3	Tremolite		
G1	16	J9	AX	92	97	F	7	0.38	18.4	Tremolite		
G1	16	J9	AX	91	96	F	7.75	1.8	4.3	Tremolite		
G1	16	J9	AX		100	CF	16.5	0.8	20.6	Tremolite		
G1	18	F9	AX	107	114	F	14	2.6	5.4	Tremolite		
G1	2	C2	AX	9	10	F	22.5	1.5	15	Tremolite		
G1	7	H4	AX	40	41	F	7	0.55	12.7	Tremolite		
G1	6	J4	AX	37	38	F	5.7	0.8	7.1	Tremolite		
G1	5	I2	AX	33	34	F	6	0.7	8.6	Tremolite		
G1	5	I2	AX	32	33	F	15.25	1	15.2	Tremolite		
G1	3	E2	AX	18	19	F	5.85	1	5.8	Tremolite		
G1	7	H4	AX	41	42	F	54	1.2	45	Tremolite		
G1	2	C2	AX	10	11	F	10.85	0.8	13.6	Tremolite		
G1	2	C2	AX		8	MF	5.1	0.25	20.4	Tremolite		
G1	2	C2	AX	4	4	F	5.35	0.65	8.2	Tremolite		
G1	9	D4	AX	60	64	F	13.2	2.7	4.9	Tremolite		

Lab/Cor, Inc.
7619 6th Ave Nw
Seattle, WA 98117

Phone: (206) 781-0155
Fax: (206) 789-8424
http://www.labcor.net

A Professional Service Corporation in the Northwest

ISO 10312, Direct Count Categories

Job Number: 070434 **SEA**
Report Number: 070434R06
Client: Idaho National Laboratory
Date Received: 4/23/2007
Project Name: RARE

Lab/Cor Sample No.: S29
Client Sample No.: FB-2-R4
Description:
Filter Fraction: 1
Residual Ash Vol:
Aliquot Dilution: 0
Final Dilution: 0
Volume (L): 0
Lab Filter Area (mm2): 385
Grid Openings Analyzed: 35
Average Grid Opening Area: 0.009
Area Analyzed (mm2): 0.315
Analytical Sens. (struc/cc): 0
Dectection Limit. (struc/cc): 0

Structure Type	Filter Density (s/mm2)	Concen-tration (struc/cc)	95% Confidence Interval (struc/cc)	Structure Count[1] Prim/Total
PCM Equivalent Fibers-NIOSH		Not Applicable	Not Applicable	108

Gr	No.	Loc.	ID	Prim	Tot	Class	Len	Wid	Asp	Analyte	Elements	Comment
G1	2	C2	AX		7	MF	13.2	0.5	26.4	Tremolite		
G1	5	I2	AX	30	31	F	19	2	9.5	Tremolite		
G1	2	C2	ADQ	13	14	F	9.8	1.2	8.2	Tremolite	Mg, Al, Si, Ca, Fe	
G1	1	A2	AQ	2	2	F	17.5	2	8.8	Tremolite	Mg, Al, Si, Ca, Fe	
G1	2	C2	AX	12	13	F	5.4	0.6	9	Tremolite		
G1	8	F4	AX	57	61	F	29	4.5	6.4	Tremolite		
G1	2	C2	AX		3	MF	5.75	1.2	4.8	Tremolite		
G1	7	H4	AX	42	43	F	7.5	1.35	5.6	Tremolite		
G1	9	D4	AX		66	MF	6	0.8	7.5	Tremolite		
G1	8	F4	AX	56	60	F	5.6	0.7	8	Tremolite		
G1	8	F4	AX	55	59	F	6.2	1.2	5.2	Tremolite		
G1	8	F4	AX	54	58	F	13.5	1.8	7.5	Tremolite		
G1	8	F4	AX	53	57	F	7.75	0.65	11.9	Tremolite		
G1	7	H4	AX	46	47	F	6	1.25	4.8	Tremolite		
G1	8	F4	AX	50	51	F	6.75	2	3.4	Tremolite		
G1	8	F4	AX		55	CF	5.5	0.55	10	Tremolite		
G1	8	F4	AX		54	CF	9	0.75	12	Tremolite		
G1	8	F4	AX		53	CF	27.5	3.75	7.3	Tremolite		
G1	8	F4	AX	51	52	F	21.7	1.8	12.1	Tremolite		
G1	9	D4	AX	59	63	F	7.65	1.1	7	Tremolite		
G1	7	H4	AX	43	44	F	6.1	1.2	5.1	Tremolite		
G2	35	I7	AX	195	204	F	18	4.5	4	Tremolite		
G2	32	C7	AX		182	CF	5.75	1	5.8	Tremolite		
G2	31	A7	AX	171	179	F	5.8	1.25	4.6	Tremolite		
G2	30	B4	AX	168	176	F	5.6	1	5.6	Tremolite		
G2	30	B4	AX	165	173	F	7.7	1.5	5.1	Tremolite		
G2	29	D4	AX	163	171	F	10	2	5	Tremolite		
G2	29	D4	AX	160	168	F	18.5	1.2	15.4	Tremolite		
G2	29	D4	AX	158	166	F	5.8	1	5.8	Tremolite		
G2	32	C7	AX	172	180	F	6.55	0.4	16.4	Tremolite		
G2	34	G7	AX	190	199	F	60	4	15	Tremolite		
G2	29	D4	AX	162	170	F	10.5	1.2	8.8	Tremolite		
G2	28	F4	AX	156	164	F	12	2	6	Tremolite		
G2	32	C7	AX	176	185	F	6.2	1.85	3.4	Tremolite		

Lab/Cor, Inc.
7619 6th Ave Nw
Seattle, WA 98117

Phone: (206) 781-0155
Fax: (206) 789-8424
http://www.labcor.net

A Professional Service Corporation in the Northwest

ISO 10312, Direct Count Categories

Job Number: 070434 **SEA** **Report Number:** 070434R06
Client: Idaho National Laboratory **Date Received:** 4/23/2007
Project Name: RARE

Lab/Cor Sample No.: S29
Client Sample No.: FB-2-R4
Description:
Filter Fraction: 1
Residual Ash Vol:
Aliquot Dilution: 0
Final Dilution: 0
Volume (L): 0
Lab Filter Area (mm2): 385
Grid Openings Analyzed: 35
Average Grid Opening Area: 0.009
Area Analyzed (mm2): 0.315
Analytical Sens. (struc/cc): 0
Dectection Limit. (struc/cc): 0

Structure Type	Filter Density (s/mm2)	Concen-tration (struc/cc)	95% Confidence Interval (struc/cc)	Structure Count[1] Prim/Total
PCM Equivalent Fibers-NIOSH		Not Applicable	Not Applicable	108

Gr	No.	Loc.	ID	Prim	Tot	Class	Len	Wid	Asp	Analyte	Elements	Comment
G2	32	C7	AX	177	186	F	5.6	1.2	4.7	Tremolite		
G2	33	E7	AX	183	192	F	17.2	1.8	9.6	Tremolite		
G2	33	E7	AX	184	193	F	5.5	0.8	6.9	Tremolite		
G2	33	E7	AX	185	194	B	40	3	13.3	Tremolite		
G2	34	G7	AX	189	198	F	14	0.75	18.7	Tremolite		
G2	34	G7	AX	191	200	F	10.5	1.85	5.7	Tremolite		
G2	35	I7	AX	194	203	F	5.25	0.7	7.5	Tremolite		
G2	24	G2	AX	135	143	F	13	0.4	32.5	Tremolite		
G2	33	E7	AX	186	195	F	11.2	0.85	13.2	Tremolite		
G2	22	C2	AX	126	134	F	7.7	2	3.8	Tremolite		
G2	24	G2	AX	138	146	F	17	1.5	11.3	Tremolite		
G2	27	H4	AX	153	161	F	10.65	1.2	8.9	Tremolite		
G2	21	A2	AX	119	127	F	7.5	0.45	16.7	Tremolite		
G2	22	C2	AX	122	130	F	6	1.25	4.8	Tremolite		
G2	22	C2	AX	125	133	F	14.2	1.8	7.9	Tremolite		
G2	22	C2	AX	127	135	F	7	1.1	6.4	Tremolite		
G2	22	C2	AX	128	136	F	12	0.65	18.5	Tremolite		
G2	23	E2	AX	129	137	F	6.85	1.8	3.8	Tremolite		
G2	23	E2	AX	130	138	F	7.5	1.5	5	Tremolite		
G2	23	E2	AX	132	140	F	7.2	0.75	9.6	Tremolite		
G2	26	J4	AX	147	155	F	23.2	1.2	19.3	Tremolite		
G2	22	C2	AX	124	132	F	5.1	1	5.1	Tremolite		
G2	24	G2	AX	137	145	F	5.2	1.12	4.6	Tremolite		
G2	27	H4	AX	149	157	F	14.35	1.28	11.2	Tremolite		
G2	27	H4	AX	148	156	F	11	0.38	28.9	Tremolite		
G2	27	H4	AX	152	160	F	10.7	0.65	16.5	Tremolite		
G2	26	J4	AX	145	153	F	10.5	1.2	8.8	Tremolite		
G2	26	J4	AX	143	151	F	6.5	1.2	5.4	Tremolite		
G2	25	I2	AX	142	150	F	12.7	0.65	19.5	Tremolite		
G2	25	I2	AX	140	148	F	7.2	0.8	9	Tremolite		
G2	25	I2	AX	139	147	F	20.8	1.2	17.3	Tremolite		

PCM Equivalent Structures-NIOSH	307.9	Not Applicable	Not Applicable	97	

Gr	No.	Loc.	ID	Prim	Tot	Class	Len	Wid	Asp	Analyte	Elements	Comment
G1	14	G7	AX	83	88	F	12	0.6	20	Tremolite		

Lab/Cor, Inc.
7619 6th Ave Nw
Seattle, WA 98117

Phone: (206) 781-0155
Fax: (206) 789-8424
http://www.labcor.net

A Professional Service Corporation in the Northwest

ISO 10312, Direct Count Categories

Job Number: 070434 **SEA**
Client: Idaho National Laboratory
Project Name: RARE

Report Number: 070434R06
Date Received: 4/23/2007

Lab/Cor Sample No.: S29
Client Sample No.: FB-2-R4
Description:
Filter Fraction: 1
Residual Ash Vol:

Aliquot Dilution: 0
Final Dilution: 0

Volume (L): 0
Lab Filter Area (mm2): 385
Grid Openings Analyzed: 35
Average Grid Opening Area: 0.009
Area Analyzed (mm2): 0.315
Analytical Sens. (struc/cc): 0
Dectection Limit. (struc/cc): 0

Structure Type	Filter Density (s/mm2)	Concen-tration (struc/cc)	95% Confidence Interval (struc/cc)	Structure Count[1] Prim/Total
PCM Equivalent Structures-NIOSH	307.9	Not Applicable	Not Applicable	97

Gr	No.	Loc.	ID	Prim	Tot	Class	Len	Wid	Asp	Analyte	Elements	Comment
G1	12	C7	AX	75	80	F	6.12	0.55	11.1	Tremolite		
G1	13	E7	AX	81	86	F	5.1	1.5	3.4	Tremolite		
G1	12	C7	AX	77	82	F	9.8	0.85	11.5	Tremolite		
G1	12	C7	AX	76	81	F	8.6	0.5	17.2	Tremolite		
G1	14	G7	AX	82	87	F	26	1.5	17.3	Tremolite		
G1	12	C7	AX	74	79	F	12	1.2	10	Tremolite		
G1	11	A7	AX	72	77	F	7	0.55	12.7	Tremolite		
G1	11	A7	AX	71		MD 1-1	11.2	3.5	3.2	Tremolite		
G1	10	B4	AX	64	68	F	15	0.7	21.4	Tremolite		
G1	14	G7	AX	85	90	F	7	0.75	9.3	Tremolite		
G1	20	B9	AX	118	126	F	13	3	4.3	Tremolite		
G1	10	B4	AX	68	72	F	40	4.75	8.4	Tremolite		
G1	15	I7	AX	86	91	F	5.65	1.45	3.9	Tremolite		
G1	16	J9	AX	91	96	F	7.75	1.8	4.3	Tremolite		
G1	16	J9	AX	92	97	F	7	0.38	18.4	Tremolite		
G1	16	J9	AX	93	98	F	6.2	1.2	5.2	Tremolite		
G1	16	J9	AX	94		CD 2-2	20.25	3.75	5.4	Tremolite		
G1	16	J9	AX	95	101	F	14	2	7	Tremolite		
G1	16	J9	AX	96	102	F	9.5	2	4.8	Tremolite		
G1	16	J9	AX	99	106	F	5.55	0.7	7.9	Tremolite		
G1	17	H9	AX	100	107	F	22	1.75	12.6	Tremolite		
G1	9	D4	AX	60	64	F	13.2	2.7	4.9	Tremolite		
G1	20	B9	AX	117	125	F	6	0.55	10.9	Tremolite		
G1	18	F9	AX	107	114	F	14	2.6	5.4	Tremolite		
G1	19	D9	AX	112	120	F	27	3.5	7.7	Tremolite		
G1	2	C2	AX	7		MD 2-2	13.8	2.75	5	Tremolite		
G1	9	D4	AX	59	63	F	7.65	1.1	7	Tremolite		
G1	2	C2	ADQ	13	14	F	9.8	1.2	8.2	Tremolite	Mg, Al, Si, Ca, Fe	
G1	19	D9	AX	114	122	F	5.2	0.75	6.9	Tremolite		
G1	2	C2	AX	4	4	F	5.35	0.65	8.2	Tremolite		
G1	1	A2	AQ	2	2	F	17.5	2	8.8	Tremolite	Mg, Al, Si, Ca, Fe	
G1	2	C2	AX	9	10	F	22.5	1.5	15	Tremolite		
G1	2	C2	AX	10	11	F	10.85	0.8	13.6	Tremolite		
G1	2	C2	AX	11		MD 1-0	6	1.85	3.2	Tremolite		

Lab/Cor, Inc.
7619 6th Ave Nw
Seattle, WA 98117

Phone: (206) 781-0155
Fax: (206) 789-8424
http://www.labcor.net

A Professional Service Corporation in the Northwest

ISO 10312, Direct Count Categories

Job Number: 070434 **SEA**
Client: Idaho National Laboratory
Project Name: RARE

Report Number: 070434R06
Date Received: 4/23/2007

Lab/Cor Sample No.: S29
Client Sample No.: FB-2-R4
Description:
Filter Fraction: 1
Residual Ash Vol:

Aliquot Dilution: 0
Final Dilution: 0

Volume (L): 0
Lab Filter Area (mm2): 385
Grid Openings Analyzed: 35
Average Grid Opening Area: 0.009
Area Analyzed (mm2): 0.315
Analytical Sens. (struc/cc): 0
Dectection Limit. (struc/cc): 0

Structure Type	Filter Density (s/mm2)	Concen-tration (struc/cc)	95% Confidence Interval (struc/cc)	Structure Count[1] Prim/Total
PCM Equivalent Structures-NIOSH	307.9	Not Applicable	Not Applicable	97

Gr	No.	Loc.	ID	Prim	Tot	Class	Len	Wid	Asp	Analyte	Elements	Comment
G1	2	C2	AX	12	13	F	5.4	0.6	9	Tremolite		
G1	3	E2	AX	17	18	F	6.5	1.5	4.3	Tremolite		
G1	3	E2	AX	18	19	F	5.85	1	5.8	Tremolite		
G1	5	I2	AX	30	31	F	19	2	9.5	Tremolite		
G1	5	I2	AX	32	33	F	15.25	1	15.2	Tremolite		
G1	8	F4	AX	54	58	F	13.5	1.8	7.5	Tremolite		
G1	5	I2	AX	33	34	F	6	0.7	8.6	Tremolite		
G1	8	F4	AX	57	61	F	29	4.5	6.4	Tremolite		
G1	8	F4	AX	55	59	F	6.2	1.2	5.2	Tremolite		
G1	8	F4	AX	53	57	F	7.75	0.65	11.9	Tremolite		
G1	8	F4	AX	51	52	F	21.7	1.8	12.1	Tremolite		
G1	8	F4	AX	50	51	F	6.75	2	3.4	Tremolite		
G1	7	H4	AX	40	41	F	7	0.55	12.7	Tremolite		
G1	7	H4	AX	43	44	F	6.1	1.2	5.1	Tremolite		
G1	7	H4	AX	42	43	F	7.5	1.35	5.6	Tremolite		
G1	7	H4	AX	41	42	F	54	1.2	45	Tremolite		
G1	7	H4	AX	46	47	F	6	1.25	4.8	Tremolite		
G1	8	F4	AX	56	60	F	5.6	0.7	8	Tremolite		
G1	6	J4	AX	37	38	F	5.7	0.8	7.1	Tremolite		
G2	30	B4	AX	168	176	F	5.6	1	5.6	Tremolite		
G2	30	B4	AX	165	173	F	7.7	1.5	5.1	Tremolite		
G2	29	D4	AX	163	171	F	10	2	5	Tremolite		
G2	29	D4	AX	162	170	F	10.5	1.2	8.8	Tremolite		
G2	29	D4	AX	160	168	F	18.5	1.2	15.4	Tremolite		
G2	28	F4	AX	156	164	F	12	2	6	Tremolite		
G2	31	A7	AX	171	179	F	5.8	1.25	4.6	Tremolite		
G2	34	G7	AX	189	198	F	14	0.75	18.7	Tremolite		
G2	27	H4	AX	153	161	F	10.65	1.2	8.9	Tremolite		
G2	29	D4	AX	158	166	F	5.8	1	5.8	Tremolite		
G2	32	C7	AX	172	180	F	6.55	0.4	16.4	Tremolite		
G2	32	C7	AX	176	185	F	6.2	1.85	3.4	Tremolite		
G2	32	C7	AX	177	186	F	5.6	1.2	4.7	Tremolite		
G2	33	E7	AX	183	192	F	17.2	1.8	9.6	Tremolite		
G2	33	E7	AX	184	193	F	5.5	0.8	6.9	Tremolite		

Lab/Cor, Inc.
7619 6th Ave Nw
Seattle, WA 98117

Phone: (206) 781-0155
Fax: (206) 789-8424
http://www.labcor.net

A Professional Service Corporation in the Northwest

ISO 10312, Direct Count Categories

Job Number: 070434 **SEA** **Report Number:** 070434R06
Client: Idaho National Laboratory **Date Received:** 4/23/2007
Project Name: RARE

Lab/Cor Sample No.: S29
Client Sample No.: FB-2-R4
Description:
Filter Fraction: 1 **Aliquot Dilution:** 0
Residual Ash Vol: **Final Dilution:** 0

Volume (L): 0
Lab Filter Area (mm2): 385
Grid Openings Analyzed: 35
Average Grid Opening Area: 0.009
Area Analyzed (mm2): 0.315
Analytical Sens. (struc/cc): 0
Dectection Limit. (struc/cc): 0

Structure Type	Filter Density (s/mm2)	Concen-tration (struc/cc)	95% Confidence Interval (struc/cc)	Structure Count[1] Prim/Total
PCM Equivalent Structures-NIOSH	307.9	Not Applicable	Not Applicable	97

Gr	No.	Loc.	ID	Prim	Tot	Class	Len	Wid	Asp	Analyte	Elements	Comment
G2	35	I7	AX	195	204	F	18	4.5	4	Tremolite		
G2	33	E7	AX	186	195	F	11.2	0.85	13.2	Tremolite		
G2	34	G7	AX	190	199	F	60	4	15	Tremolite		
G2	34	G7	AX	191	200	F	10.5	1.85	5.7	Tremolite		
G2	35	I7	AX	194	203	F	5.25	0.7	7.5	Tremolite		
G2	27	H4	AX	148	156	F	11	0.38	28.9	Tremolite		
G2	33	E7	AX	185	194	B	40	3	13.3	Tremolite		
G2	22	C2	AX	125	133	F	14.2	1.8	7.9	Tremolite		
G2	27	H4	AX	152	160	F	10.7	0.65	16.5	Tremolite		
G2	27	H4	AX	149	157	F	14.35	1.28	11.2	Tremolite		
G2	21	A2	AX	119	127	F	7.5	0.45	16.7	Tremolite		
G2	22	C2	AX	124	132	F	5.1	1	5.1	Tremolite		
G2	22	C2	AX	126	134	F	7.7	2	3.8	Tremolite		
G2	22	C2	AX	127	135	F	7	1.1	6.4	Tremolite		
G2	22	C2	AX	128	136	F	12	0.65	18.5	Tremolite		
G2	23	E2	AX	129	137	F	6.85	1.8	3.8	Tremolite		
G2	23	E2	AX	130	138	F	7.5	1.5	5	Tremolite		
G2	25	I2	AX	142	150	F	12.7	0.65	19.5	Tremolite		
G2	26	J4	AX	147	155	F	23.2	1.2	19.3	Tremolite		
G2	22	C2	AX	122	130	F	6	1.25	4.8	Tremolite		
G2	23	E2	AX	132	140	F	7.2	0.75	9.6	Tremolite		
G2	26	J4	AX	143	151	F	6.5	1.2	5.4	Tremolite		
G2	26	J4	AX	145	153	F	10.5	1.2	8.8	Tremolite		
G2	25	I2	AX	140	148	F	7.2	0.8	9	Tremolite		
G2	25	I2	AX	139	147	F	20.8	1.2	17.3	Tremolite		
G2	24	G2	AX	138	146	F	17	1.5	11.3	Tremolite		
G2	24	G2	AX	137	145	F	5.2	1.12	4.6	Tremolite		
G2	24	G2	AX	135	143	F	13	0.4	32.5	Tremolite		

Asbestos Structures >5um and 3:1	292.1	Not Applicable	Not Applicable	92

Gr	No.	Loc.	ID	Prim	Tot	Class	Len	Wid	Asp	Analyte	Elements	Comment
G1	13	E7	AX	78		MD 1-1	16	6.5	2.5	Tremolite		
G1	11	A7	AX	72	77	F	7	0.55	12.7	Tremolite		
G1	12	C7	AX	74	79	F	12	1.2	10	Tremolite		
G1	12	C7	AX	75	80	F	6.12	0.55	11.1	Tremolite		

Lab/Cor, Inc.
7619 6th Ave Nw
Seattle, WA 98117

Phone: (206) 781-0155
Fax: (206) 789-8424
http://www.labcor.net

A Professional Service Corporation in the Northwest

ISO 10312, Direct Count Categories

Job Number: 070434 **SEA** **Report Number:** 070434R06
Client: Idaho National Laboratory **Date Received:** 4/23/2007
Project Name: RARE

Lab/Cor Sample No.: S29
Client Sample No.: FB-2-R4
Description:
Filter Fraction: 1 **Aliquot Dilution:** 0
Residual Ash Vol: **Final Dilution:** 0

Volume (L): 0
Lab Filter Area (mm2): 385
Grid Openings Analyzed: 35
Average Grid Opening Area: 0.009
Area Analyzed (mm2): 0.315
Analytical Sens. (struc/cc): 0
Dectection Limit. (struc/cc): 0

Structure Type	Filter Density (s/mm2)	Concen-tration (struc/cc)	95% Confidence Interval (struc/cc)	Structure Count[1] Prim/Total
Asbestos Structures >5um and 3:1	292.1	Not Applicable	Not Applicable	92

Gr	No.	Loc.	ID	Prim	Tot	Class	Len	Wid	Asp	Analyte	Elements	Comment
G1	20	B9	AX	117	125	F	6	0.55	10.9	Tremolite		
G1	12	C7	AX	77	82	F	9.8	0.85	11.5	Tremolite		
G1	11	A7	AX	71		MD 1-1	11.2	3.5	3.2	Tremolite		
G1	11	A7	AX	70		CD 2-1	13	5	2.6	Tremolite		
G1	10	B4	AX	68	72	F	40	4.75	8.4	Tremolite		
G1	10	B4	AX	64	68	F	15	0.7	21.4	Tremolite		
G1	14	G7	AX	82	87	F	26	1.5	17.3	Tremolite		
G1	19	D9	AX	112	120	F	27	3.5	7.7	Tremolite		
G1	11	A7	AX	69		MD 1-1	22	10	2.2	Tremolite		
G1	14	G7	AX	83	88	F	12	0.6	20	Tremolite		
G1	14	G7	AX	85	90	F	7	0.75	9.3	Tremolite		
G1	16	J9	AX	92	97	F	7	0.38	18.4	Tremolite		
G1	16	J9	AX	93	98	F	6.2	1.2	5.2	Tremolite		
G1	16	J9	AX	94		CD 2-2	20.25	3.75	5.4	Tremolite		
G1	16	J9	AX	95	101	F	14	2	7	Tremolite		
G1	16	J9	AX	98		MD 2-0	8.5	5	1.7	Tremolite		
G1	16	J9	AX	99	106	F	5.55	0.7	7.9	Tremolite		
G1	17	H9	AX	100	107	F	22	1.75	12.6	Tremolite		
G1	18	F9	AX	109		CD 2-1	8.5	4	2.1	Tremolite		
G1	19	D9	AX	114	122	F	5.2	0.75	6.9	Tremolite		
G1	9	D4	AX	62		MD 1-1	10	4.5	2.2	Tremolite		
G1	18	F9	AX	107	114	F	14	2.6	5.4	Tremolite		
G1	2	C2	AX	7		MD 2-2	13.8	2.75	5	Tremolite		
G1	9	D4	AX	59	63	F	7.65	1.1	7	Tremolite		
G1	12	C7	AX	76	81	F	8.6	0.5	17.2	Tremolite		
G1	1	A2	AQ	2	2	F	17.5	2	8.8	Tremolite	Mg, Al, Si, Ca, Fe	
G1	2	C2	ADQ	13	14	F	9.8	1.2	8.2	Tremolite	Mg, Al, Si, Ca, Fe	
G1	2	C2	AX	4	4	F	5.35	0.65	8.2	Tremolite		
G1	2	C2	AX	9	10	F	22.5	1.5	15	Tremolite		
G1	2	C2	AX	10	11	F	10.85	0.8	13.6	Tremolite		
G1	2	C2	AX	11		MD 1-0	6	1.85	3.2	Tremolite		
G1	2	C2	AX	12	13	F	5.4	0.6	9	Tremolite		
G1	2	C2	AX	15	16	F	7	0.2	35	Tremolite		
G1	3	E2	AX	18	19	F	5.85	1	5.8	Tremolite		

Lab/Cor, Inc.
7619 6th Ave Nw
Seattle, WA 98117

Phone: (206) 781-0155
Fax: (206) 789-8424
http://www.labcor.net

A Professional Service Corporation in the Northwest

ISO 10312, Direct Count Categories

Job Number: 070434 **SEA**
Client: Idaho National Laboratory
Project Name: RARE

Report Number: 070434R06
Date Received: 4/23/2007

Lab/Cor Sample No.: S29
Client Sample No.: FB-2-R4
Description:
Filter Fraction: 1
Residual Ash Vol:

Aliquot Dilution: 0
Final Dilution: 0

Volume (L): 0
Lab Filter Area (mm2): 385
Grid Openings Analyzed: 35
Average Grid Opening Area: 0.009
Area Analyzed (mm2): 0.315
Analytical Sens. (struc/cc): 0
Dectection Limit. (struc/cc): 0

Structure Type	Filter Density (s/mm2)	Concen-tration (struc/cc)	95% Confidence Interval (struc/cc)	Structure Count[1] Prim/Total
Asbestos Structures >5um and 3:1	292.1	Not Applicable	Not Applicable	92

Gr	No.	Loc.	ID	Prim	Tot	Class	Len	Wid	Asp	Analyte	Elements	Comment
G1	5	I2	AX	30	31	F	19	2	9.5	Tremolite		
G1	5	I2	AX	32	33	F	15.25	1	15.2	Tremolite		
G1	8	F4	AX	54	58	F	13.5	1.8	7.5	Tremolite		
G1	2	C2	AX	3		MD 1-1	7.58	6	1.3	Tremolite		
G1	5	I2	AX	33	34	F	6	0.7	8.6	Tremolite		
G1	8	F4	AX	57	61	F	29	4.5	6.4	Tremolite		
G1	8	F4	AX	56	60	F	5.6	0.7	8	Tremolite		
G1	8	F4	AX	55	59	F	6.2	1.2	5.2	Tremolite		
G1	8	F4	AX	53	57	F	7.75	0.65	11.9	Tremolite		
G1	7	H4	AX	41	42	F	54	1.2	45	Tremolite		
G1	6	J4	AX	37	38	F	5.7	0.8	7.1	Tremolite		
G1	7	H4	AX	40	41	F	7	0.55	12.7	Tremolite		
G1	8	F4	AX	52		CD 2-2	35	12.2	2.9	Tremolite		
G1	7	H4	AX	42	43	F	7.5	1.35	5.6	Tremolite		
G1	7	H4	AX	43	44	F	6.1	1.2	5.1	Tremolite		
G1	8	F4	AX	51	52	F	21.7	1.8	12.1	Tremolite		
G2	32	C7	AX	174		CD 2-1	7	4	1.8	Tremolite		
G2	35	I7	AX	194	203	F	5.25	0.7	7.5	Tremolite		
G2	29	D4	AX	160	168	F	18.5	1.2	15.4	Tremolite		
G2	29	D4	AX	158	166	F	5.8	1	5.8	Tremolite		
G2	29	D4	AX	163	171	F	10	2	5	Tremolite		
G2	30	B4	AX	165	173	F	7.7	1.5	5.1	Tremolite		
G2	30	B4	AX	168	176	F	5.6	1	5.6	Tremolite		
G2	32	C7	AX	172	180	F	6.55	0.4	16.4	Tremolite		
G2	29	D4	AX	162	170	F	10.5	1.2	8.8	Tremolite		
G2	33	E7	AX	183	192	F	17.2	1.8	9.6	Tremolite		
G2	33	E7	AX	184	193	F	5.5	0.8	6.9	Tremolite		
G2	33	E7	AX	185	194	B	40	3	13.3	Tremolite		
G2	33	E7	AX	186	195	F	11.2	0.85	13.2	Tremolite		
G2	34	G7	AX	189	198	F	14	0.75	18.7	Tremolite		
G2	34	G7	AX	190	199	F	60	4	15	Tremolite		
G2	34	G7	AX	193		MD 1-0	7.5	3	2.5	Tremolite		
G2	28	F4	AX	156	164	F	12	2	6	Tremolite		
G2	27	H4	AX	149	157	F	14.35	1.28	11.2	Tremolite		

Lab/Cor, Inc.
7619 6th Ave Nw
Seattle, WA 98117

Phone: (206) 781-0155
Fax: (206) 789-8424
http://www.labcor.net

A Professional Service Corporation in the Northwest

ISO 10312, Direct Count Categories

Job Number: 070434 **SEA** **Report Number:** 070434R06
Client: Idaho National Laboratory **Date Received:** 4/23/2007
Project Name: RARE

Lab/Cor Sample No.: S29
Client Sample No.: FB-2-R4
Description:
Filter Fraction: 1 **Aliquot Dilution:** 0
Residual Ash Vol: **Final Dilution:** 0

Volume (L): 0
Lab Filter Area (mm2): 385
Grid Openings Analyzed: 35
Average Grid Opening Area: 0.009
Area Analyzed (mm2): 0.315
Analytical Sens. (struc/cc): 0
Dectection Limit. (struc/cc): 0

Structure Type	Filter Density (s/mm2)	Concen-tration (struc/cc)	95% Confidence Interval (struc/cc)	Structure Count[1] Prim/Total
Asbestos Structures >5um and 3:1	292.1	Not Applicable	Not Applicable	92

Gr	No.	Loc.	ID	Prim	Tot	Class	Len	Wid	Asp	Analyte	Elements	Comment
G2	34	G7	AX	191	200	F	10.5	1.85	5.7	Tremolite		
G2	22	C2	AX	127	135	F	7	1.1	6.4	Tremolite		
G2	21	A2	AX	119	127	F	7.5	0.45	16.7	Tremolite		
G2	27	H4	AX	153	161	F	10.65	1.2	8.9	Tremolite		
G2	21	A2	AX	120		MD 1-0	5.2	2.5	2.1	Tremolite		
G2	22	C2	AX	125	133	F	14.2	1.8	7.9	Tremolite		
G2	22	C2	AX	128	136	F	12	0.65	18.5	Tremolite		
G2	23	E2	AX	130	138	F	7.5	1.5	5	Tremolite		
G2	23	E2	AX	132	140	F	7.2	0.75	9.6	Tremolite		
G2	24	G2	AX	135	143	F	13	0.4	32.5	Tremolite		
G2	24	G2	AX	138	146	F	17	1.5	11.3	Tremolite		
G2	25	I2	AX	140	148	F	7.2	0.8	9	Tremolite		
G2	25	I2	AX	142	150	F	12.7	0.65	19.5	Tremolite		
G2	26	J4	AX	143	151	F	6.5	1.2	5.4	Tremolite		
G2	26	J4	AX	145	153	F	10.5	1.2	8.8	Tremolite		
G2	26	J4	AX	147	155	F	23.2	1.2	19.3	Tremolite		
G2	27	H4	AX	152	160	F	10.7	0.65	16.5	Tremolite		
G2	27	H4	AX	148	156	F	11	0.38	28.9	Tremolite		
G2	25	I2	AX	139	147	F	20.8	1.2	17.3	Tremolite		
G2	22	C2	AX	124	132	F	5.1	1	5.1	Tremolite		

Asbestos Fibers and Bundles > 5um and 3:1		Not Applicable	Not Applicable		90

Gr	No.	Loc.	ID	Prim	Tot	Class	Len	Wid	Asp	Analyte	Elements	Comment
G1	11	A7	AX		73	MF	21.5	0.5	43	Tremolite		
G1	13	E7	AX		83	MF	7	0.5	14	Tremolite		
G1	12	C7	AX	77	82	F	9.8	0.85	11.5	Tremolite		
G1	20	B9	AX	117	125	F	6	0.55	10.9	Tremolite		
G1	12	C7	AX	76	81	F	8.6	0.5	17.2	Tremolite		
G1	12	C7	AX	75	80	F	6.12	0.55	11.1	Tremolite		
G1	10	B4	AX	64	68	F	15	0.7	21.4	Tremolite		
G1	12	C7	AX	74	79	F	12	1.2	10	Tremolite		
G1	11	A7	AX		76	MF	9.7	0.5	19.4	Tremolite		
G1	10	B4	AX	68	72	F	40	4.75	8.4	Tremolite		
G1	14	G7	AX	82	87	F	26	1.5	17.3	Tremolite		
G1	18	F9	AX		116	CB	6.8	1.85	3.7	Tremolite		

Lab/Cor, Inc.
7619 6th Ave Nw
Seattle, WA 98117

Phone: (206) 781-0155
Fax: (206) 789-8424
http://www.labcor.net

A Professional Service Corporation in the Northwest

ISO 10312, Direct Count Categories

Job Number: 070434 **SEA** **Report Number:** 070434R06
Client: Idaho National Laboratory **Date Received:** 4/23/2007
Project Name: RARE

Lab/Cor Sample No.: S29
Client Sample No.: FB-2-R4
Description:
Filter Fraction: 1 **Aliquot Dilution:** 0
Residual Ash Vol: **Final Dilution:** 0

Volume (L): 0
Lab Filter Area (mm2): 385
Grid Openings Analyzed: 35
Average Grid Opening Area: 0.009
Area Analyzed (mm2): 0.315
Analytical Sens. (struc/cc): 0
Dectection Limit. (struc/cc): 0

Structure Type	Filter Density (s/mm2)	Concen-tration (struc/cc)	95% Confidence Interval (struc/cc)	Structure Count[1] Prim/Total
Asbestos Fibers and Bundles > 5um and 3:1		Not Applicable	Not Applicable	90

Gr	No.	Loc.	ID	Prim	Tot	Class	Len	Wid	Asp	Analyte	Elements	Comment
G1	11	A7	AX	72	77	F	7	0.55	12.7	Tremolite		
G1	14	G7	AX	83	88	F	12	0.6	20	Tremolite		
G1	14	G7	AX	85	90	F	7	0.75	9.3	Tremolite		
G1	16	J9	AX		99	CF	16.85	1.5	11.2	Tremolite		
G1	16	J9	AX		100	CF	16.5	0.8	20.6	Tremolite		
G1	16	J9	AX	92	97	F	7	0.38	18.4	Tremolite		
G1	16	J9	AX	93	98	F	6.2	1.2	5.2	Tremolite		
G1	16	J9	AX	95	101	F	14	2	7	Tremolite		
G1	17	H9	AX	100	107	F	22	1.75	12.6	Tremolite		
G1	9	D4	AX	59	63	F	7.65	1.1	7	Tremolite		
G1	18	F9	AX	107	114	F	14	2.6	5.4	Tremolite		
G1	19	D9	AX	112	120	F	27	3.5	7.7	Tremolite		
G1	19	D9	AX	114	122	F	5.2	0.75	6.9	Tremolite		
G1	7	H4	AX	41	42	F	54	1.2	45	Tremolite		
G1	16	J9	AX	99	106	F	5.55	0.7	7.9	Tremolite		
G1	2	C2	AX	4	4	F	5.35	0.65	8.2	Tremolite		
G1	7	H4	AX	43	44	F	6.1	1.2	5.1	Tremolite		
G1	9	D4	AX		66	MF	6	0.8	7.5	Tremolite		
G1	1	A2	AQ	2	2	F	17.5	2	8.8	Tremolite	Mg, Al, Si, Ca, Fe	
G1	2	C2	ADQ	13	14	F	9.8	1.2	8.2	Tremolite	Mg, Al, Si, Ca, Fe	
G1	2	C2	AX		8	MF	5.1	0.25	20.4	Tremolite		
G1	2	C2	AX	9	10	F	22.5	1.5	15	Tremolite		
G1	2	C2	AX	10	11	F	10.85	0.8	13.6	Tremolite		
G1	2	C2	AX	12	13	F	5.4	0.6	9	Tremolite		
G1	2	C2	AX	15	16	F	7	0.2	35	Tremolite		
G1	3	E2	AX	18	19	F	5.85	1	5.8	Tremolite		
G1	5	I2	AX	30	31	F	19	2	9.5	Tremolite		
G1	5	I2	AX	32	33	F	15.25	1	15.2	Tremolite		
G1	8	F4	AX	54	58	F	13.5	1.8	7.5	Tremolite		
G1	8	F4	AX	57	61	F	29	4.5	6.4	Tremolite		
G1	2	C2	AX		7	MF	13.2	0.5	26.4	Tremolite		
G1	5	I2	AX	33	34	F	6	0.7	8.6	Tremolite		
G1	8	F4	AX	56	60	F	5.6	0.7	8	Tremolite		
G1	8	F4	AX	55	59	F	6.2	1.2	5.2	Tremolite		

Lab/Cor, Inc.
7619 6th Ave Nw
Seattle, WA 98117

Phone: (206) 781-0155
Fax: (206) 789-8424
http://www.labcor.net

A Professional Service Corporation in the Northwest

ISO 10312, Direct Count Categories

Job Number: 070434 **SEA** **Report Number:** 070434R06
Client: Idaho National Laboratory **Date Received:** 4/23/2007
Project Name: RARE

Lab/Cor Sample No.: S29
Client Sample No.: FB-2-R4
Description:
Filter Fraction: 1 **Aliquot Dilution:** 0
Residual Ash Vol: **Final Dilution:** 0

Volume (L): 0
Lab Filter Area (mm2): 385
Grid Openings Analyzed: 35
Average Grid Opening Area: 0.009
Area Analyzed (mm2): 0.315
Analytical Sens. (struc/cc): 0
Dectection Limit. (struc/cc): 0

Structure Type	Filter Density (s/mm2)	Concen-tration (struc/cc)	95% Confidence Interval (struc/cc)	Structure Count[1] Prim/Total
Asbestos Fibers and Bundles > 5um and 3:1		Not Applicable	Not Applicable	90

Gr	No.	Loc.	ID	Prim	Tot	Class	Len	Wid	Asp	Analyte	Elements	Comment
G1	8	F4	AX	53	57	F	7.75	0.65	11.9	Tremolite		
G1	8	F4	AX	51	52	F	21.7	1.8	12.1	Tremolite		
G1	8	F4	AX		55	CF	5.5	0.55	10	Tremolite		
G1	8	F4	AX		54	CF	9	0.75	12	Tremolite		
G1	8	F4	AX		53	CF	27.5	3.75	7.3	Tremolite		
G1	7	H4	AX	42	43	F	7.5	1.35	5.6	Tremolite		
G1	7	H4	AX	40	41	F	7	0.55	12.7	Tremolite		
G1	6	J4	AX	37	38	F	5.7	0.8	7.1	Tremolite		
G2	29	D4	AX	158	166	F	5.8	1	5.8	Tremolite		
G2	34	G7	AX	190	199	F	60	4	15	Tremolite		
G2	29	D4	AX	162	170	F	10.5	1.2	8.8	Tremolite		
G2	29	D4	AX	163	171	F	10	2	5	Tremolite		
G2	30	B4	AX	165	173	F	7.7	1.5	5.1	Tremolite		
G2	30	B4	AX	168	176	F	5.6	1	5.6	Tremolite		
G2	32	C7	AX		182	CF	5.75	1	5.8	Tremolite		
G2	29	D4	AX	160	168	F	18.5	1.2	15.4	Tremolite		
G2	32	C7	AX	172	180	F	6.55	0.4	16.4	Tremolite		
G2	33	E7	AX	183	192	F	17.2	1.8	9.6	Tremolite		
G2	33	E7	AX	184	193	F	5.5	0.8	6.9	Tremolite		
G2	33	E7	AX	185	194	B	40	3	13.3	Tremolite		
G2	34	G7	AX	189	198	F	14	0.75	18.7	Tremolite		
G2	34	G7	AX	191	200	F	10.5	1.85	5.7	Tremolite		
G2	35	I7	AX	194	203	F	5.25	0.7	7.5	Tremolite		
G2	28	F4	AX	156	164	F	12	2	6	Tremolite		
G2	24	G2	AX	135	143	F	13	0.4	32.5	Tremolite		
G2	33	E7	AX	186	195	F	11.2	0.85	13.2	Tremolite		
G2	22	C2	AX	128	136	F	12	0.65	18.5	Tremolite		
G2	21	A2	AX	119	127	F	7.5	0.45	16.7	Tremolite		
G2	22	C2	AX	124	132	F	5.1	1	5.1	Tremolite		
G2	25	I2	AX	139	147	F	20.8	1.2	17.3	Tremolite		
G2	22	C2	AX	127	135	F	7	1.1	6.4	Tremolite		
G2	27	H4	AX	153	161	F	10.65	1.2	8.9	Tremolite		
G2	23	E2	AX	130	138	F	7.5	1.5	5	Tremolite		
G2	23	E2	AX	132	140	F	7.2	0.75	9.6	Tremolite		

Lab/Cor, Inc.
7619 6th Ave Nw
Seattle, WA 98117

Phone: (206) 781-0155
Fax: (206) 789-8424
http://www.labcor.net

A Professional Service Corporation in the Northwest

ISO 10312, Direct Count Categories

Job Number: 070434 **SEA**
Report Number: 070434R06
Client: Idaho National Laboratory
Date Received: 4/23/2007
Project Name: RARE

Lab/Cor Sample No.: S29
Client Sample No.: FB-2-R4
Description:
Filter Fraction: 1
Residual Ash Vol:
Aliquot Dilution: 0
Final Dilution: 0
Volume (L): 0
Lab Filter Area (mm2): 385
Grid Openings Analyzed: 35
Average Grid Opening Area: 0.009
Area Analyzed (mm2): 0.315
Analytical Sens. (struc/cc): 0
Dectection Limit. (struc/cc): 0

Structure Type	Filter Density (s/mm2)	Concen-tration (struc/cc)	95% Confidence Interval (struc/cc)	Structure Count[1] Prim/Total
Asbestos Fibers and Bundles > 5um and 3:1		Not Applicable	Not Applicable	90

Gr	No.	Loc.	ID	Prim	Tot	Class	Len	Wid	Asp	Analyte	Elements	Comment
G2	24	G2	AX	138	146	F	17	1.5	11.3	Tremolite		
G2	27	H4	AX	152	160	F	10.7	0.65	16.5	Tremolite		
G2	25	I2	AX	142	150	F	12.7	0.65	19.5	Tremolite		
G2	26	J4	AX	143	151	F	6.5	1.2	5.4	Tremolite		
G2	26	J4	AX	145	153	F	10.5	1.2	8.8	Tremolite		
G2	26	J4	AX	147	155	F	23.2	1.2	19.3	Tremolite		
G2	27	H4	AX	148	156	F	11	0.38	28.9	Tremolite		
G2	27	H4	AX	149	157	F	14.35	1.28	11.2	Tremolite		
G2	25	I2	AX	140	148	F	7.2	0.8	9	Tremolite		
G2	22	C2	AX	125	133	F	14.2	1.8	7.9	Tremolite		

Lab/Cor, Inc.
7619 6th Ave Nw
Seattle, WA 98117

Phone: (206) 781-0155
Fax: (206) 789-8424
http://www.labcor.net

A Professional Service Corporation in the Northwest

ISO 10312, Direct Count Categories

Job Number: 070434 **SEA**
Client: Idaho National Laboratory
Project Name: RARE

Report Number: 070434R06
Date Received: 4/23/2007

Lab/Cor Sample No.: S30
Client Sample No.: FB-2-R5
Description:
Filter Fraction: 1
Residual Ash Vol:

Aliquot Dilution: 0
Final Dilution: 0

Volume (L): 0
Lab Filter Area (mm2): 385
Grid Openings Analyzed: 35
Average Grid Opening Area: 0.009
Area Analyzed (mm2): 0.315
Analytical Sens. (struc/cc): 0
Dectection Limit. (struc/cc): 0

Structure Type	Filter Density (s/mm2)	Concen-tration (struc/cc)	95% Confidence Interval (struc/cc)	Structure Count[1] Prim/Total
PCM Equivalent Fibers-ISO		Not Applicable	Not Applicable	72

Gr	No.	Loc.	ID	Prim	Tot	Class	Len	Wid	Asp	Analyte	Elements	Comment
G1	17	H9	AX	78	80	F	24.2	0.68	35.6	Tremolite		
G1	6	J4	AX		31	CF	5.5	0.3	18.3	Tremolite		
G1	20	B9	AX	92	94	F	27.5	0.8	34.4	Tremolite		
G1	19	D9	AX	88	90	F	5.75	0.8	7.2	Tremolite		
G1	19	D9	AX	87	89	F	15	0.75	20	Tremolite		
G1	18	F9	AX	84	86	F	8.65	0.75	11.5	Tremolite		
G1	17	H9	AX	82	84	F	20	3	6.7	Tremolite		
G1	17	H9	AX	77	79	F	14.35	1.8	8	Tremolite		
G1	16	J9	AX	75	77	F	11.8	1.75	6.7	Tremolite		
G1	15	I7	AX	72	74	F	11.1	0.7	15.9	Tremolite		
G1	13	E7	AX	68	70	F	9.75	0.7	13.9	Tremolite		
G1	13	E7	AX	64	66	F	15.8	2	7.9	Tremolite		
G1	13	E7	AX	62	64	F	6.5	0.8	8.1	Tremolite		
G1	13	E7	AX	61	63	F	15	1.7	8.8	Tremolite		
G1	8	F4	AX	34	35	F	5.25	0.8	6.6	Tremolite		
G1	17	H9	AX	83	85	F	5.12	0.6	8.5	Tremolite		
G1	13	E7	AX		60	MF	7	1.2	5.8	Tremolite		
G1	6	J4	AX	30	30	F	6.12	0.7	8.7	Tremolite		
G1	7	H4	AX	32	33	F	8.8	0.8	11	Tremolite		
G1	7	H4	AX	33	34	F	5.4	0.5	10.8	Tremolite		
G1	6	J4	AX	29	29	F	9.25	0.6	15.4	Tremolite		
G1	9	D4	AX	38	39	B	9	2.8	3.2	Tremolite		
G1	9	D4	AX	43	44	F	5.3	0.8	6.6	Tremolite		
G1	10	B4	AX	44	45	F	5.15	0.75	6.9	Tremolite		
G1	10	B4	AX	46	47	F	7	0.55	12.7	Tremolite		
G1	10	B4	AX	48	49	F	9	0.65	13.8	Tremolite		
G1	11	A7	AX	51	52	F	11	1.3	8.5	Tremolite		
G1	11	A7	AX	54	55	F	8.4	1.85	4.5	Tremolite		
G1	12	C7	AX	56	57	B	11	2	5.5	Tremolite		
G1	3	E2	AX	16	16	F	8.75	0.55	15.9	Tremolite		
G1	3	E2	AX	15	15	F	12.5	1.8	6.9	Tremolite		
G1	3	E2	AX	13	13	F	8.25	0.85	9.7	Tremolite		
G1	1	A2	AX	7	7	F	13.6	1.2	11.3	Tremolite		
G1	1	A2	AX	5	5	F	16.35	1.85	8.8	Tremolite		

Lab/Cor, Inc.
7619 6th Ave Nw
Seattle, WA 98117

Phone: (206) 781-0155
Fax: (206) 789-8424
http://www.labcor.net

A Professional Service Corporation in the Northwest

ISO 10312, Direct Count Categories

Job Number: 070434 **SEA**
Report Number: 070434R06
Client: Idaho National Laboratory
Date Received: 4/23/2007
Project Name: RARE

Lab/Cor Sample No.: S30
Client Sample No.: FB-2-R5
Description:
Filter Fraction: 1
Residual Ash Vol:
Aliquot Dilution: 0
Final Dilution: 0
Volume (L): 0
Lab Filter Area (mm2): 385
Grid Openings Analyzed: 35
Average Grid Opening Area: 0.009
Area Analyzed (mm2): 0.315
Analytical Sens. (struc/cc): 0
Dectection Limit. (struc/cc): 0

Structure Type	Filter Density (s/mm2)	Concen-tration (struc/cc)	95% Confidence Interval (struc/cc)	Structure Count[1] Prim/Total
PCM Equivalent Fibers-ISO		Not Applicable	Not Applicable	72

Gr	No.	Loc.	ID	Prim	Tot	Class	Len	Wid	Asp	Analyte	Elements	Comment
G1	1	A2	AX		4	MF	5.8	0.38	15.3	Tremolite		
G1	5	I2	AX	28	28	F	9.65	2.5	3.9	Tremolite		
G1	1	A2	ADQ	3	3	F	13	0.65	20	Tremolite	Mg, Al, Si, Ca, Fe	
G2	31	A7	AX	134	136	F	6	1.8	3.3	Tremolite		
G2	33	E7	AX	149	151	F	9	0.7	12.9	Tremolite		
G2	31	A7	AX	140	142	F	9.2	1.2	7.7	Tremolite		
G2	32	C7	AX	143	145	F	11.5	1.5	7.7	Tremolite		
G2	32	C7	AX	146	148	F	5.7	0.3	19	Tremolite		
G2	32	C7	AX	147	149	F	5.5	0.8	6.9	Tremolite		
G2	32	C7	AX	148	150	F	10	2	5	Tremolite		
G2	31	A7	AX	138	140	F	9	0.8	11.2	Tremolite		
G2	33	E7	AX	151	153	F	12	2	6	Tremolite		
G2	33	E7	AX	152	154	F	11.5	0.55	20.9	Tremolite		
G2	33	E7	AX	153	155	F	11.35	1.5	7.6	Tremolite		
G2	34	G7	AX	155	157	F	14.7	1.8	8.2	Tremolite		
G2	34	G7	AX	156	158	F	11	0.7	15.7	Tremolite		
G2	35	I7	AX	158	160	F	8.5	0.22	38.6	Tremolite		
G2	35	I7	AX	160	162	F	9.45	0.38	24.9	Tremolite		
G2	31	A7	AX		137	MF	9.5	0.65	14.6	Tremolite		
G2	26	J4	AX	118	120	F	6	1.2	5	Tremolite		
G2	35	I7	AX	159	161	F	5.2	0.75	6.9	Tremolite		
G2	21	A2	AX	98	100	F	5.3	0.9	5.9	Tremolite		
G2	27	H4	AX	124	126	F	5.2	1.25	4.2	Tremolite		
G2	21	A2	AX	95	97	F	9.75	0.8	12.2	Tremolite		
G2	30	B4	AX	130	132	F	7	0.55	12.7	Tremolite		
G2	22	C2	AX	99	101	F	18	0.7	25.7	Tremolite		
G2	22	C2	AX	104	106	F	11.5	1.1	10.5	Tremolite		
G2	23	E2	AX	105	107	F	5.75	1.25	4.6	Tremolite		
G2	23	E2	AX	106	108	F	11	1	11	Tremolite		
G2	23	E2	AX	110	112	F	7	0.7	10	Tremolite		
G2	24	G2	AX		113	MF	8	0.75	10.7	Tremolite		
G2	25	I2	AX	113	115	F	7.5	0.65	11.5	Tremolite		
G2	26	J4	AX	120	122	F	22.5	1	22.5	Tremolite		
G2	28	F4	AX	125	127	F	7	0.6	11.7	Tremolite		

Lab/Cor, Inc.
7619 6th Ave Nw
Seattle, WA 98117

Phone: (206) 781-0155
Fax: (206) 789-8424
http://www.labcor.net

A Professional Service Corporation in the Northwest

ISO 10312, Direct Count Categories

Job Number: 070434 **SEA**
Report Number: 070434R06
Client: Idaho National Laboratory
Date Received: 4/23/2007
Project Name: RARE

Lab/Cor Sample No.: S30
Client Sample No.: FB-2-R5
Description:
Filter Fraction: 1
Residual Ash Vol:
Aliquot Dilution: 0
Final Dilution: 0
Volume (L): 0
Lab Filter Area (mm2): 385
Grid Openings Analyzed: 35
Average Grid Opening Area: 0.009
Area Analyzed (mm2): 0.315
Analytical Sens. (struc/cc): 0
Dectection Limit. (struc/cc): 0

Structure Type	Filter Density (s/mm2)	Concen-tration (struc/cc)	95% Confidence Interval (struc/cc)	Structure Count[1] Prim/Total
PCM Equivalent Fibers-ISO		Not Applicable	Not Applicable	72

Gr	No.	Loc.	ID	Prim	Tot	Class	Len	Wid	Asp	Analyte	Elements	Comment
G2	29	D4	AX	126	128	F	7	1.75	4	Tremolite		
G2	29	D4	AX	127	129	F	7.85	1.85	4.2	Tremolite		
G2	29	D4	AX	129	131	F	20	3	6.7	Tremolite		
G2	24	G2	AX	112	114	F	9.5	0.65	14.6	Tremolite		

PCM Equivalent Structures-ISO	215.9	Not Applicable	Not Applicable	68	

Gr	No.	Loc.	ID	Prim	Tot	Class	Len	Wid	Asp	Analyte	Elements	Comment
G1	18	F9	AX	84	86	F	8.65	0.75	11.5	Tremolite		
G1	12	C7	AX	56	57	B	11	2	5.5	Tremolite		
G1	13	E7	AX	61	63	F	15	1.7	8.8	Tremolite		
G1	13	E7	AX	62	64	F	6.5	0.8	8.1	Tremolite		
G1	13	E7	AX	64	66	F	15.8	2	7.9	Tremolite		
G1	13	E7	AX	68	70	F	9.75	0.7	13.9	Tremolite		
G1	15	I7	AX	72	74	F	11.1	0.7	15.9	Tremolite		
G1	16	J9	AX	75	77	F	11.8	1.75	6.7	Tremolite		
G1	17	H9	AX	77	79	F	14.35	1.8	8	Tremolite		
G1	17	H9	AX	78	80	F	24.2	0.68	35.6	Tremolite		
G1	20	B9	AX	92	94	F	27.5	0.8	34.4	Tremolite		
G1	17	H9	AX	83	85	F	5.12	0.6	8.5	Tremolite		
G1	19	D9	AX	87	89	F	15	0.75	20	Tremolite		
G1	19	D9	AX	88	90	F	5.75	0.8	7.2	Tremolite		
G1	11	A7	AX	54	55	F	8.4	1.85	4.5	Tremolite		
G1	7	H4	AX	33	34	F	5.4	0.5	10.8	Tremolite		
G1	17	H9	AX	82	84	F	20	3	6.7	Tremolite		
G1	5	I2	AX	28	28	F	9.65	2.5	3.9	Tremolite		
G1	11	A7	AX	51	52	F	11	1.3	8.5	Tremolite		
G1	9	D4	AX	38	39	B	9	2.8	3.2	Tremolite		
G1	1	A2	AX	7	7	F	13.6	1.2	11.3	Tremolite		
G1	3	E2	AX	13	13	F	8.25	0.85	9.7	Tremolite		
G1	3	E2	AX	16	16	F	8.75	0.55	15.9	Tremolite		
G1	1	A2	AX	5	5	F	16.35	1.85	8.8	Tremolite		
G1	6	J4	AX	29	29	F	9.25	0.6	15.4	Tremolite		
G1	6	J4	AX	30	30	F	6.12	0.7	8.7	Tremolite		
G1	7	H4	AX	32	33	F	8.8	0.8	11	Tremolite		
G1	8	F4	AX	34	35	F	5.25	0.8	6.6	Tremolite		

Lab/Cor, Inc.
7619 6th Ave Nw
Seattle, WA 98117

Phone: (206) 781-0155
Fax: (206) 789-8424
http://www.labcor.net

A Professional Service Corporation in the Northwest

ISO 10312, Direct Count Categories

Job Number: 070434 **SEA** **Report Number:** 070434R06
Client: Idaho National Laboratory **Date Received:** 4/23/2007
Project Name: RARE

Lab/Cor Sample No.: S30
Client Sample No.: FB-2-R5
Description:
Filter Fraction: 1 **Aliquot Dilution:** 0
Residual Ash Vol: **Final Dilution:** 0

Volume (L): 0
Lab Filter Area (mm2): 385
Grid Openings Analyzed: 35
Average Grid Opening Area: 0.009
Area Analyzed (mm2): 0.315
Analytical Sens. (struc/cc): 0
Dectection Limit. (struc/cc): 0

Structure Type	Filter Density (s/mm2)	Concen-tration (struc/cc)	95% Confidence Interval (struc/cc)	Structure Count[1] Prim/Total
PCM Equivalent Structures-ISO	215.9	Not Applicable	Not Applicable	68

Gr	No.	Loc.	ID	Prim	Tot	Class	Len	Wid	Asp	Analyte	Elements	Comment
G1	1	A2	ADQ	3	3	F	13	0.65	20	Tremolite	Mg, Al, Si, Ca, Fe	
G1	9	D4	AX	43	44	F	5.3	0.8	6.6	Tremolite		
G1	10	B4	AX	44	45	F	5.15	0.75	6.9	Tremolite		
G1	10	B4	AX	46	47	F	7	0.55	12.7	Tremolite		
G1	10	B4	AX	48	49	F	9	0.65	13.8	Tremolite		
G1	3	E2	AX	15	15	F	12.5	1.8	6.9	Tremolite		
G2	30	B4	AX	130	132	F	7	0.55	12.7	Tremolite		
G2	32	C7	AX	148	150	F	10	2	5	Tremolite		
G2	31	A7	AX	138	140	F	9	0.8	11.2	Tremolite		
G2	31	A7	AX	140	142	F	9.2	1.2	7.7	Tremolite		
G2	32	C7	AX	143	145	F	11.5	1.5	7.7	Tremolite		
G2	32	C7	AX	146	148	F	5.7	0.3	19	Tremolite		
G2	32	C7	AX	147	149	F	5.5	0.8	6.9	Tremolite		
G2	33	E7	AX	149	151	F	9	0.7	12.9	Tremolite		
G2	33	E7	AX	151	153	F	12	2	6	Tremolite		
G2	33	E7	AX	152	154	F	11.5	0.55	20.9	Tremolite		
G2	33	E7	AX	153	155	F	11.35	1.5	7.6	Tremolite		
G2	34	G7	AX	155	157	F	14.7	1.8	8.2	Tremolite		
G2	34	G7	AX	156	158	F	11	0.7	15.7	Tremolite		
G2	35	I7	AX	159	161	F	5.2	0.75	6.9	Tremolite		
G2	29	D4	AX	129	131	F	20	3	6.7	Tremolite		
G2	35	I7	AX	160	162	F	9.45	0.38	24.9	Tremolite		
G2	35	I7	AX	158	160	F	8.5	0.22	38.6	Tremolite		
G2	22	C2	AX	104	106	F	11.5	1.1	10.5	Tremolite		
G2	31	A7	AX	134	136	F	6	1.8	3.3	Tremolite		
G2	29	D4	AX	127	129	F	7.85	1.85	4.2	Tremolite		
G2	21	A2	AX	95	97	F	9.75	0.8	12.2	Tremolite		
G2	22	C2	AX	99	101	F	18	0.7	25.7	Tremolite		
G2	23	E2	AX	105	107	F	5.75	1.25	4.6	Tremolite		
G2	23	E2	AX	106	108	F	11	1	11	Tremolite		
G2	23	E2	AX	110	112	F	7	0.7	10	Tremolite		
G2	28	F4	AX	125	127	F	7	0.6	11.7	Tremolite		
G2	21	A2	AX	98	100	F	5.3	0.9	5.9	Tremolite		
G2	29	D4	AX	126	128	F	7	1.75	4	Tremolite		

Lab/Cor, Inc.
7619 6th Ave Nw
Seattle, WA 98117

Phone: (206) 781-0155
Fax: (206) 789-8424
http://www.labcor.net

A Professional Service Corporation in the Northwest

ISO 10312, Direct Count Categories

Job Number: 070434 **SEA** **Report Number:** 070434R06
Client: Idaho National Laboratory **Date Received:** 4/23/2007
Project Name: RARE

Lab/Cor Sample No.: S30
Client Sample No.: FB-2-R5
Description:
Filter Fraction: 1 **Aliquot Dilution:** 0
Residual Ash Vol: **Final Dilution:** 0

Volume (L): 0
Lab Filter Area (mm2): 385
Grid Openings Analyzed: 35
Average Grid Opening Area: 0.009
Area Analyzed (mm2): 0.315
Analytical Sens. (struc/cc): 0
Dectection Limit. (struc/cc): 0

Structure Type	Filter Density (s/mm2)	Concen-tration (struc/cc)	95% Confidence Interval (struc/cc)	Structure Count[1] Prim/Total
PCM Equivalent Structures-ISO	215.9	Not Applicable	Not Applicable	68
PCM Equivalent Fibers-NIOSH		Not Applicable	Not Applicable	71

Gr	No.	Loc.	ID	Prim	Tot	Class	Len	Wid	Asp	Analyte	Elements	Comment
G2	24	G2	AX	111		MD 1-1	9	2	4.5	Tremolite		
G2	27	H4	AX	124	126	F	5.2	1.25	4.2	Tremolite		
G2	26	J4	AX	120	122	F	22.5	1	22.5	Tremolite		
G2	26	J4	AX	118	120	F	6	1.2	5	Tremolite		
G2	25	I2	AX	113	115	F	7.5	0.65	11.5	Tremolite		
G2	24	G2	AX	112	114	F	9.5	0.65	14.6	Tremolite		
G1	13	E7	AX	68	70	F	9.75	0.7	13.9	Tremolite		
G1	15	I7	AX	72	74	F	11.1	0.7	15.9	Tremolite		
G1	11	A7	AX	54	55	F	8.4	1.85	4.5	Tremolite		
G1	12	C7	AX	56	57	B	11	2	5.5	Tremolite		
G1	13	E7	AX		60	MF	7	1.2	5.8	Tremolite		
G1	13	E7	AX	61	63	F	15	1.7	8.8	Tremolite		
G1	13	E7	AX	62	64	F	6.5	0.8	8.1	Tremolite		
G1	13	E7	AX	64	66	F	15.8	2	7.9	Tremolite		
G1	11	A7	AX	51	52	F	11	1.3	8.5	Tremolite		
G1	16	J9	AX	75	77	F	11.8	1.75	6.7	Tremolite		
G1	10	B4	AX	48	49	F	9	0.65	13.8	Tremolite		
G1	17	H9	AX	78	80	F	24.2	0.68	35.6	Tremolite		
G1	17	H9	AX	82	84	F	20	3	6.7	Tremolite		
G1	17	H9	AX	83	85	F	5.12	0.6	8.5	Tremolite		
G1	18	F9	AX	84	86	F	8.65	0.75	11.5	Tremolite		
G1	19	D9	AX	87	89	F	15	0.75	20	Tremolite		
G1	20	B9	AX	92	94	F	27.5	0.8	34.4	Tremolite		
G1	19	D9	AX	88	90	F	5.75	0.8	7.2	Tremolite		
G1	1	A2	AX		4	MF	5.8	0.38	15.3	Tremolite		
G1	1	A2	ADQ	3	3	F	13	0.65	20	Tremolite	Mg, Al, Si, Ca, Fe	
G1	1	A2	AX	5	5	F	16.35	1.85	8.8	Tremolite		
G1	1	A2	AX	7	7	F	13.6	1.2	11.3	Tremolite		
G1	3	E2	AX	13	13	F	8.25	0.85	9.7	Tremolite		
G1	3	E2	AX	15	15	F	12.5	1.8	6.9	Tremolite		
G1	3	E2	AX	16	16	F	8.75	0.55	15.9	Tremolite		
G1	5	I2	AX	28	28	F	9.65	2.5	3.9	Tremolite		

Lab/Cor, Inc.
7619 6th Ave Nw
Seattle, WA 98117

Phone: (206) 781-0155
Fax: (206) 789-8424
http://www.labcor.net

A Professional Service Corporation in the Northwest

ISO 10312, Direct Count Categories

Job Number: 070434 **SEA**
Client: Idaho National Laboratory
Project Name: RARE

Report Number: 070434R06
Date Received: 4/23/2007

Lab/Cor Sample No.: S30
Client Sample No.: FB-2-R5
Description:
Filter Fraction: 1
Residual Ash Vol:

Aliquot Dilution: 0
Final Dilution: 0

Volume (L): 0
Lab Filter Area (mm2): 385
Grid Openings Analyzed: 35
Average Grid Opening Area: 0.009
Area Analyzed (mm2): 0.315
Analytical Sens. (struc/cc): 0
Dectection Limit. (struc/cc): 0

Structure Type	Filter Density (s/mm2)	Concen-tration (struc/cc)	95% Confidence Interval (struc/cc)	Structure Count[1] Prim/Total
PCM Equivalent Fibers-NIOSH		Not Applicable	Not Applicable	71

Gr	No.	Loc.	ID	Prim	Tot	Class	Len	Wid	Asp	Analyte	Elements	Comment
G1	6	J4	AX		31	CF	5.5	0.3	18.3	Tremolite		
G1	10	B4	AX	44	45	F	5.15	0.75	6.9	Tremolite		
G1	6	J4	AX	29	29	F	9.25	0.6	15.4	Tremolite		
G1	6	J4	AX	30	30	F	6.12	0.7	8.7	Tremolite		
G1	7	H4	AX	32	33	F	8.8	0.8	11	Tremolite		
G1	7	H4	AX	33	34	F	5.4	0.5	10.8	Tremolite		
G1	8	F4	AX	34	35	F	5.25	0.8	6.6	Tremolite		
G1	9	D4	AX	38	39	B	9	2.8	3.2	Tremolite		
G1	9	D4	AX	43	44	F	5.3	0.8	6.6	Tremolite		
G1	10	B4	AX	46	47	F	7	0.55	12.7	Tremolite		
G1	17	H9	AX	77	79	F	14.35	1.8	8	Tremolite		
G2	32	C7	AX	147	149	F	5.5	0.8	6.9	Tremolite		
G2	32	C7	AX	146	148	F	5.7	0.3	19	Tremolite		
G2	32	C7	AX	143	145	F	11.5	1.5	7.7	Tremolite		
G2	31	A7	AX	140	142	F	9.2	1.2	7.7	Tremolite		
G2	32	C7	AX	148	150	F	10	2	5	Tremolite		
G2	31	A7	AX	134	136	F	6	1.8	3.3	Tremolite		
G2	35	I7	AX	159	161	F	5.2	0.75	6.9	Tremolite		
G2	31	A7	AX	138	140	F	9	0.8	11.2	Tremolite		
G2	33	E7	AX	149	151	F	9	0.7	12.9	Tremolite		
G2	33	E7	AX	151	153	F	12	2	6	Tremolite		
G2	33	E7	AX	152	154	F	11.5	0.55	20.9	Tremolite		
G2	33	E7	AX	153	155	F	11.35	1.5	7.6	Tremolite		
G2	34	G7	AX	156	158	F	11	0.7	15.7	Tremolite		
G2	35	I7	AX	160	162	F	9.45	0.38	24.9	Tremolite		
G2	31	A7	AX		137	MF	9.5	0.65	14.6	Tremolite		
G2	29	D4	AX	126	128	F	7	1.75	4	Tremolite		
G2	34	G7	AX	155	157	F	14.7	1.8	8.2	Tremolite		
G2	22	C2	AX	99	101	F	18	0.7	25.7	Tremolite		
G2	21	A2	AX	95	97	F	9.75	0.8	12.2	Tremolite		
G2	29	D4	AX	129	131	F	20	3	6.7	Tremolite		
G2	21	A2	AX	98	100	F	5.3	0.9	5.9	Tremolite		
G2	30	B4	AX	130	132	F	7	0.55	12.7	Tremolite		
G2	22	C2	AX	104	106	F	11.5	1.1	10.5	Tremolite		

Lab/Cor, Inc.
7619 6th Ave Nw
Seattle, WA 98117

Phone: (206) 781-0155
Fax: (206) 789-8424
http://www.labcor.net

A Professional Service Corporation in the Northwest

ISO 10312, Direct Count Categories

Job Number: 070434 **SEA** **Report Number:** 070434R06
Client: Idaho National Laboratory **Date Received:** 4/23/2007
Project Name: RARE

Lab/Cor Sample No.: S30
Client Sample No.: FB-2-R5
Description:
Filter Fraction: 1 **Aliquot Dilution:** 0
Residual Ash Vol: **Final Dilution:** 0

Volume (L): 0
Lab Filter Area (mm2): 385
Grid Openings Analyzed: 35
Average Grid Opening Area: 0.009
Area Analyzed (mm2): 0.315
Analytical Sens. (struc/cc): 0
Dectection Limit. (struc/cc): 0

Structure Type	Filter Density (s/mm2)	Concen-tration (struc/cc)	95% Confidence Interval (struc/cc)	Structure Count[1] Prim/Total
PCM Equivalent Fibers-NIOSH		Not Applicable	Not Applicable	71

Gr	No.	Loc.	ID	Prim	Tot	Class	Len	Wid	Asp	Analyte	Elements	Comment
G2	23	E2	AX	105	107	F	5.75	1.25	4.6	Tremolite		
G2	23	E2	AX	106	108	F	11	1	11	Tremolite		
G2	23	E2	AX	110	112	F	7	0.7	10	Tremolite		
G2	24	G2	AX		113	MF	8	0.75	10.7	Tremolite		
G2	25	I2	AX	113	115	F	7.5	0.65	11.5	Tremolite		
G2	26	J4	AX	118	120	F	6	1.2	5	Tremolite		
G2	26	J4	AX	120	122	F	22.5	1	22.5	Tremolite		
G2	27	H4	AX	124	126	F	5.2	1.25	4.2	Tremolite		
G2	28	F4	AX	125	127	F	7	0.6	11.7	Tremolite		
G2	29	D4	AX	127	129	F	7.85	1.85	4.2	Tremolite		
G2	24	G2	AX	112	114	F	9.5	0.65	14.6	Tremolite		

PCM Equivalent Structures-NIOSH	212.7	Not Applicable	Not Applicable	67

Gr	No.	Loc.	ID	Prim	Tot	Class	Len	Wid	Asp	Analyte	Elements	Comment
G1	17	H9	AX	83	85	F	5.12	0.6	8.5	Tremolite		
G1	11	A7	AX	54	55	F	8.4	1.85	4.5	Tremolite		
G1	12	C7	AX	56	57	B	11	2	5.5	Tremolite		
G1	13	E7	AX	61	63	F	15	1.7	8.8	Tremolite		
G1	13	E7	AX	62	64	F	6.5	0.8	8.1	Tremolite		
G1	13	E7	AX	64	66	F	15.8	2	7.9	Tremolite		
G1	13	E7	AX	68	70	F	9.75	0.7	13.9	Tremolite		
G1	15	I7	AX	72	74	F	11.1	0.7	15.9	Tremolite		
G1	16	J9	AX	75	77	F	11.8	1.75	6.7	Tremolite		
G1	17	H9	AX	77	79	F	14.35	1.8	8	Tremolite		
G1	19	D9	AX	88	90	F	5.75	0.8	7.2	Tremolite		
G1	17	H9	AX	82	84	F	20	3	6.7	Tremolite		
G1	18	F9	AX	84	86	F	8.65	0.75	11.5	Tremolite		
G1	11	A7	AX	51	52	F	11	1.3	8.5	Tremolite		
G1	19	D9	AX	87	89	F	15	0.75	20	Tremolite		
G1	17	H9	AX	78	80	F	24.2	0.68	35.6	Tremolite		
G1	1	A2	ADQ	3	3	F	13	0.65	20	Tremolite	Mg, Al, Si, Ca, Fe	
G1	20	B9	AX	92	94	F	27.5	0.8	34.4	Tremolite		
G1	1	A2	AX	5	5	F	16.35	1.85	8.8	Tremolite		
G1	1	A2	AX	7	7	F	13.6	1.2	11.3	Tremolite		
G1	3	E2	AX	13	13	F	8.25	0.85	9.7	Tremolite		

Lab/Cor, Inc.
7619 6th Ave Nw
Seattle, WA 98117

Phone: (206) 781-0155
Fax: (206) 789-8424
http://www.labcor.net

A Professional Service Corporation in the Northwest

ISO 10312, Direct Count Categories

Job Number: 070434 **SEA** **Report Number:** 070434R06
Client: Idaho National Laboratory **Date Received:** 4/23/2007
Project Name: RARE

Lab/Cor Sample No.: S30
Client Sample No.: FB-2-R5
Description:
Filter Fraction: 1 **Aliquot Dilution:** 0
Residual Ash Vol: **Final Dilution:** 0

Volume (L): 0
Lab Filter Area (mm2): 385
Grid Openings Analyzed: 35
Average Grid Opening Area: 0.009
Area Analyzed (mm2): 0.315
Analytical Sens. (struc/cc): 0
Dectection Limit. (struc/cc): 0

Structure Type	Filter Density (s/mm2)	Concen-tration (struc/cc)	95% Confidence Interval (struc/cc)	Structure Count[1] Prim/Total
PCM Equivalent Structures-NIOSH	212.7	Not Applicable	Not Applicable	67

Gr	No.	Loc.	ID	Prim	Tot	Class	Len	Wid	Asp	Analyte	Elements	Comment
G1	3	E2	AX	15	15	F	12.5	1.8	6.9	Tremolite		
G1	3	E2	AX	16	16	F	8.75	0.55	15.9	Tremolite		
G1	5	I2	AX	28	28	F	9.65	2.5	3.9	Tremolite		
G1	6	J4	AX	29	29	F	9.25	0.6	15.4	Tremolite		
G1	10	B4	AX	46	47	F	7	0.55	12.7	Tremolite		
G1	7	H4	AX	32	33	F	8.8	0.8	11	Tremolite		
G1	7	H4	AX	33	34	F	5.4	0.5	10.8	Tremolite		
G1	8	F4	AX	34	35	F	5.25	0.8	6.6	Tremolite		
G1	9	D4	AX	38	39	B	9	2.8	3.2	Tremolite		
G1	9	D4	AX	43	44	F	5.3	0.8	6.6	Tremolite		
G1	10	B4	AX	44	45	F	5.15	0.75	6.9	Tremolite		
G1	10	B4	AX	48	49	F	9	0.65	13.8	Tremolite		
G1	6	J4	AX	30	30	F	6.12	0.7	8.7	Tremolite		
G2	32	C7	AX	147	149	F	5.5	0.8	6.9	Tremolite		
G2	32	C7	AX	146	148	F	5.7	0.3	19	Tremolite		
G2	32	C7	AX	143	145	F	11.5	1.5	7.7	Tremolite		
G2	31	A7	AX	140	142	F	9.2	1.2	7.7	Tremolite		
G2	32	C7	AX	148	150	F	10	2	5	Tremolite		
G2	31	A7	AX	134	136	F	6	1.8	3.3	Tremolite		
G2	34	G7	AX	156	158	F	11	0.7	15.7	Tremolite		
G2	31	A7	AX	138	140	F	9	0.8	11.2	Tremolite		
G2	33	E7	AX	149	151	F	9	0.7	12.9	Tremolite		
G2	33	E7	AX	151	153	F	12	2	6	Tremolite		
G2	33	E7	AX	152	154	F	11.5	0.55	20.9	Tremolite		
G2	34	G7	AX	155	157	F	14.7	1.8	8.2	Tremolite		
G2	35	I7	AX	159	161	F	5.2	0.75	6.9	Tremolite		
G2	29	D4	AX	129	131	F	20	3	6.7	Tremolite		
G2	29	D4	AX	127	129	F	7.85	1.85	4.2	Tremolite		
G2	33	E7	AX	153	155	F	11.35	1.5	7.6	Tremolite		
G2	23	E2	AX	106	108	F	11	1	11	Tremolite		
G2	30	B4	AX	130	132	F	7	0.55	12.7	Tremolite		
G2	35	I7	AX	160	162	F	9.45	0.38	24.9	Tremolite		
G2	21	A2	AX	98	100	F	5.3	0.9	5.9	Tremolite		
G2	22	C2	AX	99	101	F	18	0.7	25.7	Tremolite		

Lab/Cor, Inc.
7619 6th Ave Nw
Seattle, WA 98117

Phone: (206) 781-0155
Fax: (206) 789-8424
http://www.labcor.net

A Professional Service Corporation in the Northwest

ISO 10312, Direct Count Categories

Job Number: 070434 **SEA** **Report Number:** 070434R06
Client: Idaho National Laboratory **Date Received:** 4/23/2007
Project Name: RARE

Lab/Cor Sample No.: S30
Client Sample No.: FB-2-R5
Description:
Filter Fraction: 1 **Aliquot Dilution:** 0
Residual Ash Vol: **Final Dilution:** 0

Volume (L): 0
Lab Filter Area (mm2): 385
Grid Openings Analyzed: 35
Average Grid Opening Area: 0.009
Area Analyzed (mm2): 0.315
Analytical Sens. (struc/cc): 0
Dectection Limit. (struc/cc): 0

Structure Type	Filter Density (s/mm2)	Concen-tration (struc/cc)	95% Confidence Interval (struc/cc)	Structure Count[1] Prim/Total
PCM Equivalent Structures-NIOSH	212.7	Not Applicable	Not Applicable	67

Gr	No.	Loc.	ID	Prim	Tot	Class	Len	Wid	Asp	Analyte	Elements	Comment
G2	23	E2	AX	105	107	F	5.75	1.25	4.6	Tremolite		
G2	21	A2	AX	95	97	F	9.75	0.8	12.2	Tremolite		
G2	23	E2	AX	110	112	F	7	0.7	10	Tremolite		
G2	24	G2	AX	111		MD 1-1	9	2	4.5	Tremolite		
G2	29	D4	AX	126	128	F	7	1.75	4	Tremolite		
G2	25	I2	AX	113	115	F	7.5	0.65	11.5	Tremolite		
G2	26	J4	AX	118	120	F	6	1.2	5	Tremolite		
G2	26	J4	AX	120	122	F	22.5	1	22.5	Tremolite		
G2	27	H4	AX	124	126	F	5.2	1.25	4.2	Tremolite		
G2	28	F4	AX	125	127	F	7	0.6	11.7	Tremolite		
G2	24	G2	AX	112	114	F	9.5	0.65	14.6	Tremolite		
G2	22	C2	AX	104	106	F	11.5	1.1	10.5	Tremolite		

Asbestos Structures >5um and 3:1	209.5	Not Applicable	Not Applicable	66

Gr	No.	Loc.	ID	Prim	Tot	Class	Len	Wid	Asp	Analyte	Elements	Comment
G1	13	E7	AX	68	70	F	9.75	0.7	13.9	Tremolite		
G1	13	E7	AX	64	66	F	15.8	2	7.9	Tremolite		
G1	13	E7	AX	62	64	F	6.5	0.8	8.1	Tremolite		
G1	13	E7	AX	61	63	F	15	1.7	8.8	Tremolite		
G1	13	E7	AX	59		MD 2-1	7.8	7	1.1	Tremolite		
G1	12	C7	AX	56	57	B	11	2	5.5	Tremolite		
G1	15	I7	AX	72	74	F	11.1	0.7	15.9	Tremolite		
G1	11	A7	AX	51	52	F	11	1.3	8.5	Tremolite		
G1	16	J9	AX	75	77	F	11.8	1.75	6.7	Tremolite		
G1	17	H9	AX	77	79	F	14.35	1.8	8	Tremolite		
G1	17	H9	AX	78	80	F	24.2	0.68	35.6	Tremolite		
G1	17	H9	AX	82	84	F	20	3	6.7	Tremolite		
G1	17	H9	AX	83	85	F	5.12	0.6	8.5	Tremolite		
G1	18	F9	AX	84	86	F	8.65	0.75	11.5	Tremolite		
G1	19	D9	AX	87	89	F	15	0.75	20	Tremolite		
G1	19	D9	AX	88	90	F	5.75	0.8	7.2	Tremolite		
G1	10	B4	AX	48	49	F	9	0.65	13.8	Tremolite		
G1	20	B9	AX	92	94	F	27.5	0.8	34.4	Tremolite		
G1	1	A2	AX	5	5	F	16.35	1.85	8.8	Tremolite		
G1	1	A2	AX	4		MD 1-1	5.8	3	1.9	Tremolite		

Lab/Cor, Inc.
7619 6th Ave Nw
Seattle, WA 98117

Phone: (206) 781-0155
Fax: (206) 789-8424
http://www.labcor.net

A Professional Service Corporation in the Northwest

ISO 10312, Direct Count Categories

Job Number: 070434 **SEA**
Report Number: 070434R06
Client: Idaho National Laboratory
Date Received: 4/23/2007
Project Name: RARE

Lab/Cor Sample No.: S30
Client Sample No.: FB-2-R5
Description:
Filter Fraction: 1
Residual Ash Vol:
Aliquot Dilution: 0
Final Dilution: 0
Volume (L): 0
Lab Filter Area (mm2): 385
Grid Openings Analyzed: 35
Average Grid Opening Area: 0.009
Area Analyzed (mm2): 0.315
Analytical Sens. (struc/cc): 0
Dectection Limit. (struc/cc): 0

Structure Type	Filter Density (s/mm2)	Concen-tration (struc/cc)	95% Confidence Interval (struc/cc)	Structure Count[1] Prim/Total
Asbestos Structures >5um and 3:1	209.5	Not Applicable	Not Applicable	66

Gr	No.	Loc.	ID	Prim	Tot	Class	Len	Wid	Asp	Analyte	Elements	Comment
G1	1	A2	ADQ	3	3	F	13	0.65	20	Tremolite	Mg, Al, Si, Ca, Fe	
G1	10	B4	AX	46	47	F	7	0.55	12.7	Tremolite		
G1	1	A2	AX	7	7	F	13.6	1.2	11.3	Tremolite		
G1	2	C2	AX	8		MD 1-1	7.5	5.2	1.4	Tremolite		
G1	3	E2	AX	13	13	F	8.25	0.85	9.7	Tremolite		
G1	3	E2	AX	15	15	F	12.5	1.8	6.9	Tremolite		
G1	3	E2	AX	16	16	F	8.75	0.55	15.9	Tremolite		
G1	9	D4	AX	43	44	F	5.3	0.8	6.6	Tremolite		
G1	6	J4	AX	29	29	F	9.25	0.6	15.4	Tremolite		
G1	10	B4	AX	44	45	F	5.15	0.75	6.9	Tremolite		
G1	9	D4	AX	38	39	B	9	2.8	3.2	Tremolite		
G1	8	F4	AX	34	35	F	5.25	0.8	6.6	Tremolite		
G1	7	H4	AX	33	34	F	5.4	0.5	10.8	Tremolite		
G1	7	H4	AX	32	33	F	8.8	0.8	11	Tremolite		
G1	6	J4	AX	31		CD 2-1	5.5	4	1.4	Tremolite		
G1	6	J4	AX	30	30	F	6.12	0.7	8.7	Tremolite		
G2	35	I7	AX	158	160	F	8.5	0.22	38.6	Tremolite		
G2	33	E7	AX	149	151	F	9	0.7	12.9	Tremolite		
G2	32	C7	AX	143	145	F	11.5	1.5	7.7	Tremolite		
G2	32	C7	AX	146	148	F	5.7	0.3	19	Tremolite		
G2	32	C7	AX	147	149	F	5.5	0.8	6.9	Tremolite		
G2	32	C7	AX	148	150	F	10	2	5	Tremolite		
G2	31	A7	AX	140	142	F	9.2	1.2	7.7	Tremolite		
G2	33	E7	AX	151	153	F	12	2	6	Tremolite		
G2	33	E7	AX	152	154	F	11.5	0.55	20.9	Tremolite		
G2	33	E7	AX	153	155	F	11.35	1.5	7.6	Tremolite		
G2	29	D4	AX	129	131	F	20	3	6.7	Tremolite		
G2	34	G7	AX	156	158	F	11	0.7	15.7	Tremolite		
G2	35	I7	AX	159	161	F	5.2	0.75	6.9	Tremolite		
G2	35	I7	AX	160	162	F	9.45	0.38	24.9	Tremolite		
G2	34	G7	AX	155	157	F	14.7	1.8	8.2	Tremolite		
G2	23	E2	AX	106	108	F	11	1	11	Tremolite		
G2	21	A2	AX	95	97	F	9.75	0.8	12.2	Tremolite		
G2	21	A2	AX	98	100	F	5.3	0.9	5.9	Tremolite		

Lab/Cor, Inc.
7619 6th Ave Nw
Seattle, WA 98117

Phone: (206) 781-0155
Fax: (206) 789-8424
http://www.labcor.net

A Professional Service Corporation in the Northwest

ISO 10312, Direct Count Categories

Job Number: 070434 **SEA** **Report Number:** 070434R06
Client: Idaho National Laboratory **Date Received:** 4/23/2007
Project Name: RARE

Lab/Cor Sample No.: S30
Client Sample No.: FB-2-R5
Description:
Filter Fraction: 1 **Aliquot Dilution:** 0
Residual Ash Vol: **Final Dilution:** 0

Volume (L): 0
Lab Filter Area (mm2): 385
Grid Openings Analyzed: 35
Average Grid Opening Area: 0.009
Area Analyzed (mm2): 0.315
Analytical Sens. (struc/cc): 0
Dectection Limit. (struc/cc): 0

Structure Type	Filter Density (s/mm2)	Concen-tration (struc/cc)	95% Confidence Interval (struc/cc)	Structure Count[1] Prim/Total
Asbestos Structures >5um and 3:1	209.5	Not Applicable	Not Applicable	66

Gr	No.	Loc.	ID	Prim	Tot	Class	Len	Wid	Asp	Analyte	Elements	Comment
G2	22	C2	AX	104	106	F	11.5	1.1	10.5	Tremolite		
G2	31	A7	AX	135		MD 1-1	12	7	1.7	Tremolite		
G2	23	E2	AX	110	112	F	7	0.7	10	Tremolite		
G2	24	G2	AX	111		MD 1-1	9	2	4.5	Tremolite		
G2	30	B4	AX	130	132	F	7	0.55	12.7	Tremolite		
G2	25	I2	AX	113	115	F	7.5	0.65	11.5	Tremolite		
G2	26	J4	AX	118	120	F	6	1.2	5	Tremolite		
G2	26	J4	AX	120	122	F	22.5	1	22.5	Tremolite		
G2	28	F4	AX	125	127	F	7	0.6	11.7	Tremolite		
G2	31	A7	AX	138	140	F	9	0.8	11.2	Tremolite		
G2	24	G2	AX	112	114	F	9.5	0.65	14.6	Tremolite		
G2	22	C2	AX	99	101	F	18	0.7	25.7	Tremolite		

Asbestos Fibers and Bundles > 5um and 3:1		Not Applicable	Not Applicable	66

Gr	No.	Loc.	ID	Prim	Tot	Class	Len	Wid	Asp	Analyte	Elements	Comment
G1	15	I7	AX	72	74	F	11.1	0.7	15.9	Tremolite		
G1	13	E7	AX	68	70	F	9.75	0.7	13.9	Tremolite		
G1	13	E7	AX	64	66	F	15.8	2	7.9	Tremolite		
G1	13	E7	AX	62	64	F	6.5	0.8	8.1	Tremolite		
G1	13	E7	AX	61	63	F	15	1.7	8.8	Tremolite		
G1	12	C7	AX	56	57	B	11	2	5.5	Tremolite		
G1	16	J9	AX	75	77	F	11.8	1.75	6.7	Tremolite		
G1	13	E7	AX		60	MF	7	1.2	5.8	Tremolite		
G1	17	H9	AX	77	79	F	14.35	1.8	8	Tremolite		
G1	17	H9	AX	78	80	F	24.2	0.68	35.6	Tremolite		
G1	17	H9	AX	82	84	F	20	3	6.7	Tremolite		
G1	17	H9	AX	83	85	F	5.12	0.6	8.5	Tremolite		
G1	18	F9	AX	84	86	F	8.65	0.75	11.5	Tremolite		
G1	19	D9	AX	87	89	F	15	0.75	20	Tremolite		
G1	10	B4	AX	48	49	F	9	0.65	13.8	Tremolite		
G1	20	B9	AX	92	94	F	27.5	0.8	34.4	Tremolite		
G1	10	B4	AX	46	47	F	7	0.55	12.7	Tremolite		
G1	19	D9	AX	88	90	F	5.75	0.8	7.2	Tremolite		
G1	1	A2	AX	7	7	F	13.6	1.2	11.3	Tremolite		
G1	1	A2	ADQ	3	3	F	13	0.65	20	Tremolite	Mg, Al, Si, Ca, Fe	

Lab/Cor, Inc.
7619 6th Ave Nw
Seattle, WA 98117

Phone: (206) 781-0155
Fax: (206) 789-8424
http://www.labcor.net

A Professional Service Corporation in the Northwest

ISO 10312, Direct Count Categories

Job Number: 070434 **SEA** **Report Number:** 070434R06
Client: Idaho National Laboratory **Date Received:** 4/23/2007
Project Name: RARE

Lab/Cor Sample No.: S30
Client Sample No.: FB-2-R5
Description:
Filter Fraction: 1 **Aliquot Dilution:** 0
Residual Ash Vol: **Final Dilution:** 0

Volume (L): 0
Lab Filter Area (mm2): 385
Grid Openings Analyzed: 35
Average Grid Opening Area: 0.009
Area Analyzed (mm2): 0.315
Analytical Sens. (struc/cc): 0
Dectection Limit. (struc/cc): 0

Structure Type	Filter Density (s/mm2)	Concen-tration (struc/cc)	95% Confidence Interval (struc/cc)	Structure Count[1] Prim/Total
Asbestos Fibers and Bundles > 5um and 3:1		Not Applicable	Not Applicable	66

Gr	No.	Loc.	ID	Prim	Tot	Class	Len	Wid	Asp	Analyte	Elements	Comment
G1	11	A7	AX	51	52	F	11	1.3	8.5	Tremolite		
G1	1	A2	AX	5	5	F	16.35	1.85	8.8	Tremolite		
G1	2	C2	AX		8	MF	5.5	0.18	30.6	Tremolite		
G1	3	E2	AX	13	13	F	8.25	0.85	9.7	Tremolite		
G1	3	E2	AX	15	15	F	12.5	1.8	6.9	Tremolite		
G1	3	E2	AX	16	16	F	8.75	0.55	15.9	Tremolite		
G1	6	J4	AX		31	CF	5.5	0.3	18.3	Tremolite		
G1	9	D4	AX	43	44	F	5.3	0.8	6.6	Tremolite		
G1	1	A2	AX		4	MF	5.8	0.38	15.3	Tremolite		
G1	6	J4	AX	29	29	F	9.25	0.6	15.4	Tremolite		
G1	10	B4	AX	44	45	F	5.15	0.75	6.9	Tremolite		
G1	9	D4	AX	38	39	B	9	2.8	3.2	Tremolite		
G1	8	F4	AX	34	35	F	5.25	0.8	6.6	Tremolite		
G1	7	H4	AX	33	34	F	5.4	0.5	10.8	Tremolite		
G1	7	H4	AX	32	33	F	8.8	0.8	11	Tremolite		
G1	6	J4	AX	30	30	F	6.12	0.7	8.7	Tremolite		
G2	31	A7	AX	140	142	F	9.2	1.2	7.7	Tremolite		
G2	35	I7	AX	158	160	F	8.5	0.22	38.6	Tremolite		
G2	33	E7	AX	149	151	F	9	0.7	12.9	Tremolite		
G2	32	C7	AX	146	148	F	5.7	0.3	19	Tremolite		
G2	32	C7	AX	147	149	F	5.5	0.8	6.9	Tremolite		
G2	32	C7	AX	148	150	F	10	2	5	Tremolite		
G2	32	C7	AX	143	145	F	11.5	1.5	7.7	Tremolite		
G2	33	E7	AX	151	153	F	12	2	6	Tremolite		
G2	33	E7	AX	152	154	F	11.5	0.55	20.9	Tremolite		
G2	33	E7	AX	153	155	F	11.35	1.5	7.6	Tremolite		
G2	34	G7	AX	156	158	F	11	0.7	15.7	Tremolite		
G2	35	I7	AX	160	162	F	9.45	0.38	24.9	Tremolite		
G2	31	A7	AX	138	140	F	9	0.8	11.2	Tremolite		
G2	35	I7	AX	159	161	F	5.2	0.75	6.9	Tremolite		
G2	34	G7	AX	155	157	F	14.7	1.8	8.2	Tremolite		
G2	21	A2	AX	98	100	F	5.3	0.9	5.9	Tremolite		
G2	31	A7	AX		137	MF	9.5	0.65	14.6	Tremolite		
G2	21	A2	AX	95	97	F	9.75	0.8	12.2	Tremolite		

Lab/Cor, Inc.
7619 6th Ave Nw
Seattle, WA 98117

Phone: (206) 781-0155
Fax: (206) 789-8424
http://www.labcor.net

A Professional Service Corporation in the Northwest

ISO 10312, Direct Count Categories

Job Number: 070434 **SEA**
Client: Idaho National Laboratory
Project Name: RARE

Report Number: 070434R06
Date Received: 4/23/2007

Lab/Cor Sample No.: S30
Client Sample No.: FB-2-R5
Description:
Filter Fraction: 1
Residual Ash Vol:

Aliquot Dilution: 0
Final Dilution: 0

Volume (L): 0
Lab Filter Area (mm2): 385
Grid Openings Analyzed: 35
Average Grid Opening Area: 0.009
Area Analyzed (mm2): 0.315
Analytical Sens. (struc/cc): 0
Dectection Limit. (struc/cc): 0

Structure Type	Filter Density (s/mm2)	Concen-tration (struc/cc)	95% Confidence Interval (struc/cc)	Structure Count[1] Prim/Total
Asbestos Fibers and Bundles > 5um and 3:1		Not Applicable	Not Applicable	66

Gr	No.	Loc.	ID	Prim	Tot	Class	Len	Wid	Asp	Analyte	Elements	Comment
G2	22	C2	AX	99	101	F	18	0.7	25.7	Tremolite		
G2	22	C2	AX	104	106	F	11.5	1.1	10.5	Tremolite		
G2	23	E2	AX	106	108	F	11	1	11	Tremolite		
G2	23	E2	AX	110	112	F	7	0.7	10	Tremolite		
G2	24	G2	AX		113	MF	8	0.75	10.7	Tremolite		
G2	25	I2	AX	113	115	F	7.5	0.65	11.5	Tremolite		
G2	26	J4	AX	118	120	F	6	1.2	5	Tremolite		
G2	26	J4	AX	120	122	F	22.5	1	22.5	Tremolite		
G2	28	F4	AX	125	127	F	7	0.6	11.7	Tremolite		
G2	30	B4	AX	130	132	F	7	0.55	12.7	Tremolite		
G2	29	D4	AX	129	131	F	20	3	6.7	Tremolite		
G2	24	G2	AX	112	114	F	9.5	0.65	14.6	Tremolite		

Lab/Cor, Inc.
7619 6th Ave Nw
Seattle, WA 98117

Phone: (206) 781-0155
Fax: (206) 789-8424
http://www.labcor.net

A Professional Service Corporation in the Northwest

ISO 10312, Direct Count Categories

Job Number: 070434 **SEA**
Report Number: 070434R06
Client: Idaho National Laboratory
Date Received: 4/23/2007
Project Name: RARE

Lab/Cor Sample No.: S31
Client Sample No.: FB-2-R6
Description:
Filter Fraction: 1
Residual Ash Vol:
Aliquot Dilution: 0
Final Dilution: 0
Volume (L): 0
Lab Filter Area (mm2): 385
Grid Openings Analyzed: 10
Average Grid Opening Area: 0.009
Area Analyzed (mm2): 0.09
Analytical Sens. (struc/cc): 0
Dectection Limit. (struc/cc): 0

Structure Type	Filter Density (s/mm2)	Concen-tration (struc/cc)	95% Confidence Interval (struc/cc)	Structure Count[1] Prim/Total
PCM Equivalent Fibers-ISO		Not Applicable	Not Applicable	16

Gr	No.	Loc.	ID	Prim	Tot	Class	Len	Wid	Asp	Analyte	Elements	Comment
G1	2	C2	AX		10	MF	5.7	0.7	8.1	Tremolite		
G1	5	B5	AX		24	MF	11	1.12	9.8	Tremolite		
G1	4	D7	AX	21	21	F	6.35	1.5	4.2	Tremolite		
G1	4	D7	AX	19	19	F	5.75	1.12	5.1	Tremolite		
G1	3	H4	AX	14	14	F	25.38	1.35	18.8	Tremolite		
G1	1	A2	AX	4	4	F	5.2	1.1	4.7	Tremolite		
G1	2	C2	AX	9	9	F	11.65	1.3	9	Tremolite		
G1	1	A2	AX	6	6	F	11	1.75	6.3	Tremolite		
G1	5	B5	AX	27	27	F	19.35	1	19.4	Tremolite		
G1	2	C2	AX	12	12	F	55	1.15	47.8	Tremolite		
G2	9	H8	AX	39	39	F	24	1.1	21.8	Tremolite		
G2	10	E9	AX	45	45	F	15	1.85	8.1	Tremolite		
G2	9	H8	AX	40	40	F	9.5	0.85	11.2	Tremolite		
G2	7	G5	AX	31	31	F	14.2	1	14.2	Tremolite		
G2	8	B7	AX	37	37	F	7.7	0.68	11.3	Tremolite		
G2	8	B7	AX	36	36	F	37.5	0.7	53.6	Tremolite		

PCM Equivalent Structures-ISO	155.6	Not Applicable	Not Applicable	14	

Gr	No.	Loc.	ID	Prim	Tot	Class	Len	Wid	Asp	Analyte	Elements	Comment
G1	5	B5	AX	27	27	F	19.35	1	19.4	Tremolite		
G1	1	A2	AX	4	4	F	5.2	1.1	4.7	Tremolite		
G1	1	A2	AX	6	6	F	11	1.75	6.3	Tremolite		
G1	2	C2	AX	9	9	F	11.65	1.3	9	Tremolite		
G1	2	C2	AX	12	12	F	55	1.15	47.8	Tremolite		
G1	3	H4	AX	14	14	F	25.38	1.35	18.8	Tremolite		
G1	4	D7	AX	19	19	F	5.75	1.12	5.1	Tremolite		
G1	4	D7	AX	21	21	F	6.35	1.5	4.2	Tremolite		
G2	10	E9	AX	45	45	F	15	1.85	8.1	Tremolite		
G2	9	H8	AX	40	40	F	9.5	0.85	11.2	Tremolite		
G2	9	H8	AX	39	39	F	24	1.1	21.8	Tremolite		
G2	8	B7	AX	37	37	F	7.7	0.68	11.3	Tremolite		
G2	7	G5	AX	31	31	F	14.2	1	14.2	Tremolite		
G2	8	B7	AX	36	36	F	37.5	0.7	53.6	Tremolite		

PCM Equivalent Fibers-NIOSH		Not Applicable	Not Applicable		16

Gr	No.	Loc.	ID	Prim	Tot	Class	Len	Wid	Asp	Analyte	Elements	Comment

Lab/Cor, Inc.
7619 6th Ave Nw
Seattle, WA 98117

Phone: (206) 781-0155
Fax: (206) 789-8424
http://www.labcor.net

A Professional Service Corporation in the Northwest

ISO 10312, Direct Count Categories

Job Number: 070434 **SEA** **Report Number:** 070434R06
Client: Idaho National Laboratory **Date Received:** 4/23/2007
Project Name: RARE

Lab/Cor Sample No.: S31
Client Sample No.: FB-2-R6
Description:
Filter Fraction: 1
Residual Ash Vol:
Aliquot Dilution: 0
Final Dilution: 0
Volume (L): 0
Lab Filter Area (mm2): 385
Grid Openings Analyzed: 10
Average Grid Opening Area: 0.009
Area Analyzed (mm2): 0.09
Analytical Sens. (struc/cc): 0
Dectection Limit. (struc/cc): 0

Structure Type	Filter Density (s/mm2)	Concen-tration (struc/cc)	95% Confidence Interval (struc/cc)	Structure Count[1] Prim/Total
PCM Equivalent Fibers-NIOSH		Not Applicable	Not Applicable	16

Gr	No.	Loc.	ID	Prim	Tot	Class	Len	Wid	Asp	Analyte	Elements	Comment
G1	4	D7	AX	19	19	F	5.75	1.12	5.1	Tremolite		
G1	5	B5	AX		24	MF	11	1.12	9.8	Tremolite		
G1	1	A2	AX	6	6	F	11	1.75	6.3	Tremolite		
G1	4	D7	AX	21	21	F	6.35	1.5	4.2	Tremolite		
G1	5	B5	AX	27	27	F	19.35	1	19.4	Tremolite		
G1	2	C2	AX	12	12	F	55	1.15	47.8	Tremolite		
G1	2	C2	AX		10	MF	5.7	0.7	8.1	Tremolite		
G1	1	A2	AX	4	4	F	5.2	1.1	4.7	Tremolite		
G1	2	C2	AX	9	9	F	11.65	1.3	9	Tremolite		
G1	3	H4	AX	14	14	F	25.38	1.35	18.8	Tremolite		
G2	10	E9	AX	45	45	F	15	1.85	8.1	Tremolite		
G2	7	G5	AX	31	31	F	14.2	1	14.2	Tremolite		
G2	8	B7	AX	36	36	F	37.5	0.7	53.6	Tremolite		
G2	8	B7	AX	37	37	F	7.7	0.68	11.3	Tremolite		
G2	9	H8	AX	39	39	F	24	1.1	21.8	Tremolite		
G2	9	H8	AX	40	40	F	9.5	0.85	11.2	Tremolite		

PCM Equivalent Structures-NIOSH	155.6	Not Applicable	Not Applicable	14	

Gr	No.	Loc.	ID	Prim	Tot	Class	Len	Wid	Asp	Analyte	Elements	Comment
G1	5	B5	AX	27	27	F	19.35	1	19.4	Tremolite		
G1	4	D7	AX	21	21	F	6.35	1.5	4.2	Tremolite		
G1	4	D7	AX	19	19	F	5.75	1.12	5.1	Tremolite		
G1	3	H4	AX	14	14	F	25.38	1.35	18.8	Tremolite		
G1	2	C2	AX	12	12	F	55	1.15	47.8	Tremolite		
G1	2	C2	AX	9	9	F	11.65	1.3	9	Tremolite		
G1	1	A2	AX	4	4	F	5.2	1.1	4.7	Tremolite		
G1	1	A2	AX	6	6	F	11	1.75	6.3	Tremolite		
G2	8	B7	AX	37	37	F	7.7	0.68	11.3	Tremolite		
G2	10	E9	AX	45	45	F	15	1.85	8.1	Tremolite		
G2	9	H8	AX	39	39	F	24	1.1	21.8	Tremolite		
G2	7	G5	AX	31	31	F	14.2	1	14.2	Tremolite		
G2	9	H8	AX	40	40	F	9.5	0.85	11.2	Tremolite		
G2	8	B7	AX	36	36	F	37.5	0.7	53.6	Tremolite		

Asbestos Structures >5um and 3:1	166.7	Not Applicable	Not Applicable	15	

Gr	No.	Loc.	ID	Prim	Tot	Class	Len	Wid	Asp	Analyte	Elements	Comment

Lab/Cor, Inc.
7619 6th Ave Nw
Seattle, WA 98117

Phone: (206) 781-0155
Fax: (206) 789-8424
http://www.labcor.net

A Professional Service Corporation in the Northwest

ISO 10312, Direct Count Categories

Job Number: 070434 **SEA**
Client: Idaho National Laboratory
Project Name: RARE

Report Number: 070434R06
Date Received: 4/23/2007

Lab/Cor Sample No.: S31
Client Sample No.: FB-2-R6
Description:
Filter Fraction: 1
Residual Ash Vol:

Aliquot Dilution: 0
Final Dilution: 0

Volume (L): 0
Lab Filter Area (mm2): 385
Grid Openings Analyzed: 10
Average Grid Opening Area: 0.009
Area Analyzed (mm2): 0.09
Analytical Sens. (struc/cc): 0
Dectection Limit. (struc/cc): 0

Structure Type	Filter Density (s/mm2)	Concen-tration (struc/cc)	95% Confidence Interval (struc/cc)	Structure Count[1] Prim/Total	
Asbestos Structures >5um and 3:1	166.7	Not Applicable	Not Applicable	15	

Gr	No.	Loc.	ID	Prim	Tot	Class	Len	Wid	Asp	Analyte	Elements	Comment
G1	5	B5	AX	24		MD 1-1	12.5	7	1.8	Tremolite		
G1	5	B5	AX	27	27	F	19.35	1	19.4	Tremolite		
G1	4	D7	AX	19	19	F	5.75	1.12	5.1	Tremolite		
G1	3	H4	AX	17		MD 1-0	5.85	4	1.5	Tremolite		
G1	3	H4	AX	14	14	F	25.38	1.35	18.8	Tremolite		
G1	2	C2	AX	12	12	F	55	1.15	47.8	Tremolite		
G1	2	C2	AX	10		MD 1-1	8.5	4	2.1	Tremolite		
G1	2	C2	AX	9	9	F	11.65	1.3	9	Tremolite		
G1	1	A2	AX	6	6	F	11	1.75	6.3	Tremolite		
G2	8	B7	AX	36	36	F	37.5	0.7	53.6	Tremolite		
G2	8	B7	AX	37	37	F	7.7	0.68	11.3	Tremolite		
G2	9	H8	AX	39	39	F	24	1.1	21.8	Tremolite		
G2	9	H8	AX	40	40	F	9.5	0.85	11.2	Tremolite		
G2	10	E9	AX	45	45	F	15	1.85	8.1	Tremolite		
G2	7	G5	AX	31	31	F	14.2	1	14.2	Tremolite		

Asbestos Fibers and Bundles > 5um and 3:1		Not Applicable	Not Applicable		14

Gr	No.	Loc.	ID	Prim	Tot	Class	Len	Wid	Asp	Analyte	Elements	Comment
G1	2	C2	AX	9	9	F	11.65	1.3	9	Tremolite		
G1	5	B5	AX		24	MF	11	1.12	9.8	Tremolite		
G1	4	D7	AX	19	19	F	5.75	1.12	5.1	Tremolite		
G1	5	B5	AX	27	27	F	19.35	1	19.4	Tremolite		
G1	3	H4	AX	14	14	F	25.38	1.35	18.8	Tremolite		
G1	2	C2	AX		10	MF	5.7	0.7	8.1	Tremolite		
G1	1	A2	AX	6	6	F	11	1.75	6.3	Tremolite		
G1	2	C2	AX	12	12	F	55	1.15	47.8	Tremolite		
G2	9	H8	AX	40	40	F	9.5	0.85	11.2	Tremolite		
G2	9	H8	AX	39	39	F	24	1.1	21.8	Tremolite		
G2	8	B7	AX	37	37	F	7.7	0.68	11.3	Tremolite		
G2	8	B7	AX	36	36	F	37.5	0.7	53.6	Tremolite		
G2	7	G5	AX	31	31	F	14.2	1	14.2	Tremolite		
G2	10	E9	AX	45	45	F	15	1.85	8.1	Tremolite		

Lab/Cor, Inc.
7619 6th Ave Nw
Seattle, WA 98117

Phone: (206) 781-0155
Fax: (206) 789-8424
http://www.labcor.net

A Professional Service Corporation in the Northwest

ISO 10312, Direct Count Categories

Job Number: 070434 **SEA** **Report Number:** 070434R06
Client: Idaho National Laboratory **Date Received:** 4/23/2007
Project Name: RARE

Lab/Cor Sample No.: S32
Client Sample No.: FB-2-R7
Description:
Filter Fraction: 1
Residual Ash Vol:

Aliquot Dilution: 0
Final Dilution: 0

Volume (L): 0
Lab Filter Area (mm2): 385
Grid Openings Analyzed: 10
Average Grid Opening Area: 0.009
Area Analyzed (mm2): 0.09
Analytical Sens. (struc/cc): 0
Dectection Limit. (struc/cc): 0

Structure Type	Filter Density (s/mm2)	Concen-tration (struc/cc)	95% Confidence Interval (struc/cc)	Structure Count[1] Prim/Total
PCM Equivalent Fibers-ISO		Not Applicable	Not Applicable	38

Gr	No.	Loc.	ID	Prim	Tot	Class	Len	Wid	Asp	Analyte	Elements	Comment
G1	3	G3	AX	20	20	F	44	1.2	36.7	Tremolite		
G1	3	G3	AX	23	23	F	6	0.4	15	Tremolite		
G1	5	D8	AX	33	33	F	5.2	0.65	8	Tremolite		
G1	5	D8	AX	32	32	F	28	1.8	15.6	Tremolite		
G1	5	D8	AX	31	31	F	5.1	0.65	7.8	Tremolite		
G1	5	D8	AX	30	30	F	10	0.9	11.1	Tremolite		
G1	4	I6	AX	29	29	F	6.5	1.1	5.9	Tremolite		
G1	4	I6	AX	27	27	F	6.2	1.2	5.2	Tremolite		
G1	4	I6	AX	26	26	F	19	2	9.5	Tremolite		
G1	1	A4	AX	1	1	F	28	1.8	15.6	Tremolite		
G1	4	I6	AX	24	24	F	5.5	1.1	5	Tremolite		
G1	1	A4	AQ		6	MF	5.9	0.58	10.2	Tremolite		
G1	1	A4	AX	8	8	F	19.7	1.75	11.3	Tremolite		
G1	1	A4	AX	9	9	F	11.2	1.2	9.3	Tremolite		
G1	1	A4	AZQ	7	7	F	13.3	0.75	17.7	Tremolite	Mg, Al, Si, Ca, Fe	
G1	2	D1	AX	12	12	F	5.8	0.8	7.2	Tremolite		
G1	2	D1	AX	15	15	F	5.25	0.4	13.1	Tremolite		
G1	3	G3	AX	16	16	F	6	1.5	4	Tremolite		
G2	7	G1	AX	50	50	F	5.8	0.6	9.7	Tremolite		
G2	9	F7	AX	54	54	F	16	0.6	26.7	Tremolite		
G2	10	B9	AX	66	66	F	20	1.85	10.8	Tremolite		
G2	10	B9	AX	65	65	F	12	1.85	6.5	Tremolite		
G2	10	B9	AX	64	64	F	12	2.5	4.8	Tremolite		
G2	10	B9	AX	63	63	F	9	1.2	7.5	Tremolite		
G2	10	B9	AX	62	62	F	7	0.5	14	Tremolite		
G2	10	B9	AX	61	61	F	10.5	0.7	15	Tremolite		
G2	9	F7	AX	55	55	F	12	1.2	10	Tremolite		
G2	10	B9	AX	68	68	F	15.35	0.7	21.9	Tremolite		
G2	7	G1	AX	43	43	F	7	0.5	14	Tremolite		
G2	9	F7	AX		58	MF	8.75	0.9	9.7	Tremolite		
G2	8	I3	AX	53	53	F	6.2	0.35	17.7	Tremolite		
G2	6	D3	AX	40	40	F	11.2	1.2	9.3	Tremolite		
G2	7	G1	AX	44	44	F	8	0.2	40	Tremolite		
G2	7	G1	AX	45	45	F	10.2	1	10.2	Tremolite		

Lab/Cor, Inc.
7619 6th Ave Nw
Seattle, WA 98117

Phone: (206) 781-0155
Fax: (206) 789-8424
http://www.labcor.net

A Professional Service Corporation in the Northwest

ISO 10312, Direct Count Categories

Job Number: 070434 **SEA**
Report Number: 070434R06
Client: Idaho National Laboratory
Date Received: 4/23/2007
Project Name: RARE

Lab/Cor Sample No.: S32
Client Sample No.: FB-2-R7
Description:
Filter Fraction: 1
Residual Ash Vol:
Aliquot Dilution: 0
Final Dilution: 0
Volume (L): 0
Lab Filter Area (mm2): 385
Grid Openings Analyzed: 10
Average Grid Opening Area: 0.009
Area Analyzed (mm2): 0.09
Analytical Sens. (struc/cc): 0
Dectection Limit. (struc/cc): 0

Structure Type	Filter Density (s/mm2)	Concen-tration (struc/cc)	95% Confidence Interval (struc/cc)	Structure Count[1] Prim/Total
PCM Equivalent Fibers-ISO		Not Applicable	Not Applicable	38

Gr	No.	Loc.	ID	Prim	Tot	Class	Len	Wid	Asp	Analyte	Elements	Comment
G2	7	G1	AX	47	47	F	11.5	0.85	13.5	Tremolite		
G2	7	G1	AX	48	48	F	14	2.2	6.4	Tremolite		
G2	8	I3	AX		51	MF	19.5	0.55	35.5	Tremolite		
G2	6	D3	AX	39	39	F	17	1.2	14.2	Tremolite		

PCM Equivalent Structures-ISO	388.9	Not Applicable	Not Applicable	35	

Gr	No.	Loc.	ID	Prim	Tot	Class	Len	Wid	Asp	Analyte	Elements	Comment
G1	3	G3	AX	16	16	F	6	1.5	4	Tremolite		
G1	5	D8	AX	33	33	F	5.2	0.65	8	Tremolite		
G1	5	D8	AX	31	31	F	5.1	0.65	7.8	Tremolite		
G1	5	D8	AX	30	30	F	10	0.9	11.1	Tremolite		
G1	4	I6	AX	29	29	F	6.5	1.1	5.9	Tremolite		
G1	4	I6	AX	27	27	F	6.2	1.2	5.2	Tremolite		
G1	4	I6	AX	26	26	F	19	2	9.5	Tremolite		
G1	4	I6	AX	24	24	F	5.5	1.1	5	Tremolite		
G1	5	D8	AX	32	32	F	28	1.8	15.6	Tremolite		
G1	2	D1	AX	15	15	F	5.25	0.4	13.1	Tremolite		
G1	2	D1	AX	12	12	F	5.8	0.8	7.2	Tremolite		
G1	1	A4	AZQ	7	7	F	13.3	0.75	17.7	Tremolite	Mg, Al, Si, Ca, Fe	
G1	1	A4	AX	9	9	F	11.2	1.2	9.3	Tremolite		
G1	1	A4	AX	8	8	F	19.7	1.75	11.3	Tremolite		
G1	1	A4	AX	1	1	F	28	1.8	15.6	Tremolite		
G1	3	G3	AX	20	20	F	44	1.2	36.7	Tremolite		
G1	3	G3	AX	23	23	F	6	0.4	15	Tremolite		
G2	10	B9	AX	63	63	F	9	1.2	7.5	Tremolite		
G2	9	F7	AX	55	55	F	12	1.2	10	Tremolite		
G2	10	B9	AX	61	61	F	10.5	0.7	15	Tremolite		
G2	10	B9	AX	62	62	F	7	0.5	14	Tremolite		
G2	10	B9	AX	68	68	F	15.35	0.7	21.9	Tremolite		
G2	10	B9	AX	64	64	F	12	2.5	4.8	Tremolite		
G2	10	B9	AX	66	66	F	20	1.85	10.8	Tremolite		
G2	9	F7	AX	54	54	F	16	0.6	26.7	Tremolite		
G2	6	D3	AX	39	39	F	17	1.2	14.2	Tremolite		
G2	8	I3	AX	53	53	F	6.2	0.35	17.7	Tremolite		
G2	6	D3	AX	40	40	F	11.2	1.2	9.3	Tremolite		

Lab/Cor, Inc.
7619 6th Ave Nw
Seattle, WA 98117

Phone: (206) 781-0155
Fax: (206) 789-8424
http://www.labcor.net

A Professional Service Corporation in the Northwest

ISO 10312, Direct Count Categories

Job Number: 070434 **SEA**
Report Number: 070434R06
Client: Idaho National Laboratory
Date Received: 4/23/2007
Project Name: RARE

Lab/Cor Sample No.: S32
Client Sample No.: FB-2-R7
Description:
Filter Fraction: 1
Residual Ash Vol:
Aliquot Dilution: 0
Final Dilution: 0
Volume (L): 0
Lab Filter Area (mm2): 385
Grid Openings Analyzed: 10
Average Grid Opening Area: 0.009
Area Analyzed (mm2): 0.09
Analytical Sens. (struc/cc): 0
Dectection Limit. (struc/cc): 0

Structure Type	Filter Density (s/mm2)	Concen-tration (struc/cc)	95% Confidence Interval (struc/cc)	Structure Count[1] Prim/Total	
PCM Equivalent Structures-ISO	388.9	Not Applicable	Not Applicable	35	

Gr	No.	Loc.	ID	Prim	Tot	Class	Len	Wid	Asp	Analyte	Elements	Comment
G2	7	G1	AX	43	43	F	7	0.5	14	Tremolite		
G2	7	G1	AX	44	44	F	8	0.2	40	Tremolite		
G2	7	G1	AX	45	45	F	10.2	1	10.2	Tremolite		
G2	7	G1	AX	47	47	F	11.5	0.85	13.5	Tremolite		
G2	7	G1	AX	48	48	F	14	2.2	6.4	Tremolite		
G2	7	G1	AX	50	50	F	5.8	0.6	9.7	Tremolite		
G2	10	B9	AX	65	65	F	12	1.85	6.5	Tremolite		

PCM Equivalent Fibers-NIOSH		Not Applicable	Not Applicable		38

Gr	No.	Loc.	ID	Prim	Tot	Class	Len	Wid	Asp	Analyte	Elements	Comment
G1	3	G3	AX	20	20	F	44	1.2	36.7	Tremolite		
G1	4	I6	AX	26	26	F	19	2	9.5	Tremolite		
G1	5	D8	AX	34	34	F	56	4	14	Tremolite		
G1	5	D8	AX	33	33	F	5.2	0.65	8	Tremolite		
G1	5	D8	AX	32	32	F	28	1.8	15.6	Tremolite		
G1	5	D8	AX	31	31	F	5.1	0.65	7.8	Tremolite		
G1	5	D8	AX	30	30	F	10	0.9	11.1	Tremolite		
G1	4	I6	AX	29	29	F	6.5	1.1	5.9	Tremolite		
G1	4	I6	AX	27	27	F	6.2	1.2	5.2	Tremolite		
G1	1	A4	AX	8	8	F	19.7	1.75	11.3	Tremolite		
G1	1	A4	AQ		6	MF	5.9	0.58	10.2	Tremolite		
G1	4	I6	AX	24	24	F	5.5	1.1	5	Tremolite		
G1	1	A4	AX	1	1	F	28	1.8	15.6	Tremolite		
G1	3	G3	AX	23	23	F	6	0.4	15	Tremolite		
G1	1	A4	AX	9	9	F	11.2	1.2	9.3	Tremolite		
G1	1	A4	AZQ	7	7	F	13.3	0.75	17.7	Tremolite	Mg, Al, Si, Ca, Fe	
G1	2	D1	AX	12	12	F	5.8	0.8	7.2	Tremolite		
G1	2	D1	AX	15	15	F	5.25	0.4	13.1	Tremolite		
G1	3	G3	AX	16	16	F	6	1.5	4	Tremolite		
G2	10	B9	AX	61	61	F	10.5	0.7	15	Tremolite		
G2	10	B9	AX	65	65	F	12	1.85	6.5	Tremolite		
G2	10	B9	AX	64	64	F	12	2.5	4.8	Tremolite		
G2	9	F7	AX		58	MF	8.75	0.9	9.7	Tremolite		
G2	10	B9	AX	62	62	F	7	0.5	14	Tremolite		
G2	10	B9	AX	68	68	F	15.35	0.7	21.9	Tremolite		

Lab/Cor, Inc.
7619 6th Ave Nw
Seattle, WA 98117

Phone: (206) 781-0155
Fax: (206) 789-8424
http://www.labcor.net

A Professional Service Corporation in the Northwest

ISO 10312, Direct Count Categories

Job Number: 070434 **SEA**
Report Number: 070434R06
Client: Idaho National Laboratory
Date Received: 4/23/2007
Project Name: RARE

Lab/Cor Sample No.: S32
Client Sample No.: FB-2-R7
Description:
Filter Fraction: 1
Residual Ash Vol:
Aliquot Dilution: 0
Final Dilution: 0
Volume (L): 0
Lab Filter Area (mm2): 385
Grid Openings Analyzed: 10
Average Grid Opening Area: 0.009
Area Analyzed (mm2): 0.09
Analytical Sens. (struc/cc): 0
Dectection Limit. (struc/cc): 0

Structure Type	Filter Density (s/mm2)	Concen-tration (struc/cc)	95% Confidence Interval (struc/cc)	Structure Count[1] Prim/Total
PCM Equivalent Fibers-NIOSH		Not Applicable	Not Applicable	38

Gr	No.	Loc.	ID	Prim	Tot	Class	Len	Wid	Asp	Analyte	Elements	Comment
G2	9	F7	AX	55	55	F	12	1.2	10	Tremolite		
G2	9	F7	AX	54	54	F	16	0.6	26.7	Tremolite		
G2	10	B9	AX	66	66	F	20	1.85	10.8	Tremolite		
G2	6	D3	AX	39	39	F	17	1.2	14.2	Tremolite		
G2	8	I3	AX		51	MF	19.5	0.55	35.5	Tremolite		
G2	7	G1	AX	50	50	F	5.8	0.6	9.7	Tremolite		
G2	7	G1	AX	48	48	F	14	2.2	6.4	Tremolite		
G2	7	G1	AX	47	47	F	11.5	0.85	13.5	Tremolite		
G2	7	G1	AX	45	45	F	10.2	1	10.2	Tremolite		
G2	7	G1	AX	43	43	F	7	0.5	14	Tremolite		
G2	6	D3	AX	40	40	F	11.2	1.2	9.3	Tremolite		
G2	8	I3	AX	53	53	F	6.2	0.35	17.7	Tremolite		
G2	10	B9	AX	63	63	F	9	1.2	7.5	Tremolite		

PCM Equivalent Structures-NIOSH	388.9	Not Applicable	Not Applicable	35	

Gr	No.	Loc.	ID	Prim	Tot	Class	Len	Wid	Asp	Analyte	Elements	Comment
G1	4	I6	AX	26	26	F	19	2	9.5	Tremolite		
G1	4	I6	AX	27	27	F	6.2	1.2	5.2	Tremolite		
G1	5	D8	AX	30	30	F	10	0.9	11.1	Tremolite		
G1	5	D8	AX	32	32	F	28	1.8	15.6	Tremolite		
G1	4	I6	AX	24	24	F	5.5	1.1	5	Tremolite		
G1	5	D8	AX	34	34	F	56	4	14	Tremolite		
G1	4	I6	AX	29	29	F	6.5	1.1	5.9	Tremolite		
G1	5	D8	AX	33	33	F	5.2	0.65	8	Tremolite		
G1	1	A4	AX	1	1	F	28	1.8	15.6	Tremolite		
G1	3	G3	AX	20	20	F	44	1.2	36.7	Tremolite		
G1	3	G3	AX	16	16	F	6	1.5	4	Tremolite		
G1	2	D1	AX	15	15	F	5.25	0.4	13.1	Tremolite		
G1	2	D1	AX	12	12	F	5.8	0.8	7.2	Tremolite		
G1	1	A4	AZQ	7	7	F	13.3	0.75	17.7	Tremolite	Mg, Al, Si, Ca, Fe	
G1	1	A4	AX	9	9	F	11.2	1.2	9.3	Tremolite		
G1	1	A4	AX	8	8	F	19.7	1.75	11.3	Tremolite		
G1	5	D8	AX	31	31	F	5.1	0.65	7.8	Tremolite		
G1	3	G3	AX	23	23	F	6	0.4	15	Tremolite		
G2	10	B9	AX	61	61	F	10.5	0.7	15	Tremolite		

Lab/Cor, Inc.
7619 6th Ave Nw
Seattle, WA 98117

Phone: (206) 781-0155
Fax: (206) 789-8424
http://www.labcor.net

A Professional Service Corporation in the Northwest

ISO 10312, Direct Count Categories

Job Number: 070434 **SEA** **Report Number:** 070434R06
Client: Idaho National Laboratory **Date Received:** 4/23/2007
Project Name: RARE

Lab/Cor Sample No.: S32
Client Sample No.: FB-2-R7
Description:
Filter Fraction: 1
Residual Ash Vol:
Aliquot Dilution: 0
Final Dilution: 0
Volume (L): 0
Lab Filter Area (mm2): 385
Grid Openings Analyzed: 10
Average Grid Opening Area: 0.009
Area Analyzed (mm2): 0.09
Analytical Sens. (struc/cc): 0
Dectection Limit. (struc/cc): 0

Structure Type	Filter Density (s/mm2)	Concen-tration (struc/cc)	95% Confidence Interval (struc/cc)	Structure Count[1] Prim/Total
PCM Equivalent Structures-NIOSH	388.9	Not Applicable	Not Applicable	35

Gr	No.	Loc.	ID	Prim	Tot	Class	Len	Wid	Asp	Analyte	Elements	Comment
G2	10	B9	AX	62	62	F	7	0.5	14	Tremolite		
G2	10	B9	AX	63	63	F	9	1.2	7.5	Tremolite		
G2	10	B9	AX	64	64	F	12	2.5	4.8	Tremolite		
G2	10	B9	AX	65	65	F	12	1.85	6.5	Tremolite		
G2	9	F7	AX	55	55	F	12	1.2	10	Tremolite		
G2	10	B9	AX	68	68	F	15.35	0.7	21.9	Tremolite		
G2	7	G1	AX	45	45	F	10.2	1	10.2	Tremolite		
G2	10	B9	AX	66	66	F	20	1.85	10.8	Tremolite		
G2	9	F7	AX	54	54	F	16	0.6	26.7	Tremolite		
G2	8	I3	AX	53	53	F	6.2	0.35	17.7	Tremolite		
G2	7	G1	AX	50	50	F	5.8	0.6	9.7	Tremolite		
G2	7	G1	AX	47	47	F	11.5	0.85	13.5	Tremolite		
G2	7	G1	AX	43	43	F	7	0.5	14	Tremolite		
G2	6	D3	AX	40	40	F	11.2	1.2	9.3	Tremolite		
G2	6	D3	AX	39	39	F	17	1.2	14.2	Tremolite		
G2	7	G1	AX	48	48	F	14	2.2	6.4	Tremolite		

Asbestos Structures >5um and 3:1	433.3	Not Applicable	Not Applicable	39

Gr	No.	Loc.	ID	Prim	Tot	Class	Len	Wid	Asp	Analyte	Elements	Comment
G1	1	A4	AX	9	9	F	11.2	1.2	9.3	Tremolite		
G1	1	A4	AQ	6		MD 1-1	9.5	4.8	2	Tremolite	Mg, Al, Si, Ca, Fe	
G1	5	D8	AX	30	30	F	10	0.9	11.1	Tremolite		
G1	1	A4	AX	1	1	F	28	1.8	15.6	Tremolite		
G1	5	D8	AX	34	34	F	56	4	14	Tremolite		
G1	5	D8	AX	33	33	F	5.2	0.65	8	Tremolite		
G1	5	D8	AX	31	31	F	5.1	0.65	7.8	Tremolite		
G1	4	I6	AX	29	29	F	6.5	1.1	5.9	Tremolite		
G1	4	I6	AX	27	27	F	6.2	1.2	5.2	Tremolite		
G1	4	I6	AX	26	26	F	19	2	9.5	Tremolite		
G1	1	A4	AZQ	7	7	F	13.3	0.75	17.7	Tremolite	Mg, Al, Si, Ca, Fe	
G1	5	D8	AX	32	32	F	28	1.8	15.6	Tremolite		
G1	1	A4	AX	8	8	F	19.7	1.75	11.3	Tremolite		
G1	4	I6	AX	24	24	F	5.5	1.1	5	Tremolite		
G1	2	D1	AX	12	12	F	5.8	0.8	7.2	Tremolite		
G1	2	D1	AX	13		MD 1-0	5.8	5	1.2	Tremolite		

Lab/Cor, Inc.
7619 6th Ave Nw
Seattle, WA 98117

Phone: (206) 781-0155
Fax: (206) 789-8424
http://www.labcor.net

A Professional Service Corporation in the Northwest

ISO 10312, Direct Count Categories

Job Number: 070434 **SEA** **Report Number:** 070434R06
Client: Idaho National Laboratory **Date Received:** 4/23/2007
Project Name: RARE

Lab/Cor Sample No.: S32
Client Sample No.: FB-2-R7
Description:
Filter Fraction: 1 **Aliquot Dilution:** 0
Residual Ash Vol: **Final Dilution:** 0

Volume (L): 0
Lab Filter Area (mm2): 385
Grid Openings Analyzed: 10
Average Grid Opening Area: 0.009
Area Analyzed (mm2): 0.09
Analytical Sens. (struc/cc): 0
Dectection Limit. (struc/cc): 0

Structure Type	Filter Density (s/mm2)	Concen-tration (struc/cc)	95% Confidence Interval (struc/cc)	Structure Count[1] Prim/Total
Asbestos Structures >5um and 3:1	433.3	Not Applicable	Not Applicable	39

Gr	No.	Loc.	ID	Prim	Tot	Class	Len	Wid	Asp	Analyte	Elements	Comment
G1	2	D1	AX	15	15	F	5.25	0.4	13.1	Tremolite		
G1	3	G3	AX	20	20	F	44	1.2	36.7	Tremolite		
G1	3	G3	AX	23	23	F	6	0.4	15	Tremolite		
G2	9	F7	AX	54	54	F	16	0.6	26.7	Tremolite		
G2	7	G1	AX	45	45	F	10.2	1	10.2	Tremolite		
G2	10	B9	AX	66	66	F	20	1.85	10.8	Tremolite		
G2	10	B9	AX	65	65	F	12	1.85	6.5	Tremolite		
G2	10	B9	AX	63	63	F	9	1.2	7.5	Tremolite		
G2	10	B9	AX	62	62	F	7	0.5	14	Tremolite		
G2	10	B9	AX	61	61	F	10.5	0.7	15	Tremolite		
G2	9	F7	AX	58		MD 1-1	20	12	1.7	Tremolite		
G2	9	F7	AX	55	55	F	12	1.2	10	Tremolite		
G2	10	B9	AX	68	68	F	15.35	0.7	21.9	Tremolite		
G2	6	D3	AX	40	40	F	11.2	1.2	9.3	Tremolite		
G2	7	G1	AX	48	48	F	14	2.2	6.4	Tremolite		
G2	6	D3	AX	39	39	F	17	1.2	14.2	Tremolite		
G2	8	I3	AX	53	53	F	6.2	0.35	17.7	Tremolite		
G2	7	G1	AX	43	43	F	7	0.5	14	Tremolite		
G2	7	G1	AX	44	44	F	8	0.2	40	Tremolite		
G2	7	G1	AX	47	47	F	11.5	0.85	13.5	Tremolite		
G2	7	G1	AX	50	50	F	5.8	0.6	9.7	Tremolite		
G2	8	I3	AX	51		MD 1-1	23.8	10	2.4	Tremolite		
G2	6	D3	AX	37		MD 1-0	11	5	2.2	Tremolite		

Asbestos Fibers and Bundles > 5um and 3:1		Not Applicable	Not Applicable	37

Gr	No.	Loc.	ID	Prim	Tot	Class	Len	Wid	Asp	Analyte	Elements	Comment
G1	1	A4	AX	1	1	F	28	1.8	15.6	Tremolite		
G1	4	I6	AX	26	26	F	19	2	9.5	Tremolite		
G1	5	D8	AX	34	34	F	56	4	14	Tremolite		
G1	5	D8	AX	33	33	F	5.2	0.65	8	Tremolite		
G1	5	D8	AX	32	32	F	28	1.8	15.6	Tremolite		
G1	5	D8	AX	31	31	F	5.1	0.65	7.8	Tremolite		
G1	5	D8	AX	30	30	F	10	0.9	11.1	Tremolite		
G1	4	I6	AX	29	29	F	6.5	1.1	5.9	Tremolite		
G1	4	I6	AX	27	27	F	6.2	1.2	5.2	Tremolite		

Lab/Cor, Inc.
7619 6th Ave Nw
Seattle, WA 98117

Phone: (206) 781-0155
Fax: (206) 789-8424
http://www.labcor.net

A Professional Service Corporation in the Northwest

ISO 10312, Direct Count Categories

Job Number: 070434 **SEA** **Report Number:** 070434R06
Client: Idaho National Laboratory **Date Received:** 4/23/2007
Project Name: RARE

Lab/Cor Sample No.: S32
Client Sample No.: FB-2-R7
Description:
Filter Fraction: 1 **Aliquot Dilution:** 0
Residual Ash Vol: **Final Dilution:** 0

Volume (L): 0
Lab Filter Area (mm2): 385
Grid Openings Analyzed: 10
Average Grid Opening Area: 0.009
Area Analyzed (mm2): 0.09
Analytical Sens. (struc/cc): 0
Dectection Limit. (struc/cc): 0

Structure Type	Filter Density (s/mm2)	Concen-tration (struc/cc)	95% Confidence Interval (struc/cc)	Structure Count[1] Prim/Total
Asbestos Fibers and Bundles > 5um and 3:1		Not Applicable	Not Applicable	37

Gr	No.	Loc.	ID	Prim	Tot	Class	Len	Wid	Asp	Analyte	Elements	Comment
G1	3	G3	AX	23	23	F	6	0.4	15	Tremolite		
G1	3	G3	AX	20	20	F	44	1.2	36.7	Tremolite		
G1	2	D1	AX	15	15	F	5.25	0.4	13.1	Tremolite		
G1	2	D1	AX	12	12	F	5.8	0.8	7.2	Tremolite		
G1	1	A4	AZQ	7	7	F	13.3	0.75	17.7	Tremolite	Mg, Al, Si, Ca, Fe	
G1	1	A4	AQ		6	MF	5.9	0.58	10.2	Tremolite		
G1	1	A4	AX	8	8	F	19.7	1.75	11.3	Tremolite		
G1	1	A4	AX	9	9	F	11.2	1.2	9.3	Tremolite		
G1	4	I6	AX	24	24	F	5.5	1.1	5	Tremolite		
G2	10	B9	AX	68	68	F	15.35	0.7	21.9	Tremolite		
G2	9	F7	AX	54	54	F	16	0.6	26.7	Tremolite		
G2	9	F7	AX	55	55	F	12	1.2	10	Tremolite		
G2	10	B9	AX	61	61	F	10.5	0.7	15	Tremolite		
G2	10	B9	AX	62	62	F	7	0.5	14	Tremolite		
G2	10	B9	AX	63	63	F	9	1.2	7.5	Tremolite		
G2	9	F7	AX		58	MF	8.75	0.9	9.7	Tremolite		
G2	10	B9	AX	66	66	F	20	1.85	10.8	Tremolite		
G2	7	G1	AX	48	48	F	14	2.2	6.4	Tremolite		
G2	10	B9	AX	65	65	F	12	1.85	6.5	Tremolite		
G2	8	I3	AX	53	53	F	6.2	0.35	17.7	Tremolite		
G2	7	G1	AX	50	50	F	5.8	0.6	9.7	Tremolite		
G2	7	G1	AX	47	47	F	11.5	0.85	13.5	Tremolite		
G2	7	G1	AX	45	45	F	10.2	1	10.2	Tremolite		
G2	7	G1	AX	44	44	F	8	0.2	40	Tremolite		
G2	7	G1	AX	43	43	F	7	0.5	14	Tremolite		
G2	6	D3	AX	40	40	F	11.2	1.2	9.3	Tremolite		
G2	6	D3	AX	39	39	F	17	1.2	14.2	Tremolite		
G2	8	I3	AX		51	MF	19.5	0.55	35.5	Tremolite		

Lab/Cor, Inc.
7619 6th Ave Nw
Seattle, WA 98117

Phone: (206) 781-0155
Fax: (206) 789-8424
http://www.labcor.net

A Professional Service Corporation in the Northwest

ISO 10312, Direct Count Categories

Job Number: 070434 **SEA** **Report Number:** 070434R06
Client: Idaho National Laboratory **Date Received:** 4/23/2007
Project Name: RARE

Lab/Cor Sample No.: S33
Client Sample No.: FB-1-R1
Description:
Filter Fraction: 1 **Aliquot Dilution:** 0
Residual Ash Vol: **Final Dilution:** 0

Volume (L): 0
Lab Filter Area (mm2): 385
Grid Openings Analyzed: 10
Average Grid Opening Area: 0.009
Area Analyzed (mm2): 0.09
Analytical Sens. (struc/cc): 0
Dectection Limit. (struc/cc): 0

Structure Type	Filter Density (s/mm2)	Concen-tration (struc/cc)	95% Confidence Interval (struc/cc)	Structure Count[1] Prim/Total
PCM Equivalent Fibers-ISO		Not Applicable	Not Applicable	20

Gr	No.	Loc.	ID	Prim	Tot	Class	Len	Wid	Asp	Analyte	Elements	Comment
G1	5	D7	AX	14	17	F	10.8	0.8	13.5	Tremolite		
G1	4	H8	AX	11	12	F	14	2	7	Tremolite		
G1	5	D7	AX	16	19	F	8.85	0.6	14.8	Tremolite		
G1	4	H8	AZQ		13	MF	20	1	20	Tremolite		
G1	4	H8	AX		16	MF	10	0.5	20	Tremolite		
G1	3	I5	AX	8	9	F	24.5	0.6	40.8	Tremolite		
G1	1	B4	AX	1	1	F	6.8	1.15	5.9	Tremolite		
G1	2	D4	AX	3	3	F	7.5	2	3.8	Tremolite		
G1	4	H8	AX	10	11	F	32.5	0.6	54.2	Tremolite		
G2	10	D8	AX	26	29	F	7.5	0.85	8.8	Tremolite		
G2	10	D8	AX	27	30	F	17.75	1.75	10.1	Tremolite		
G2	10	D8	AX	24	27	F	6.5	0.4	16.2	Tremolite		
G2	10	D8	AX		28	MF	12.5	1	12.5	Tremolite		
G2	9	J8	AX	23	26	F	13.5	0.75	18	Tremolite		
G2	8	G5	AX	21	24	F	13	1.2	10.8	Tremolite		
G2	8	G5	AX	20	23	F	6	0.5	12	Tremolite		
G2	6	B3	AX	17	20	F	15	0.7	21.4	Tremolite		
G2	6	B3	AX	18	21	F	7.7	1.2	6.4	Tremolite		
G2	10	D8	AX	28	31	F	6	0.6	10	Tremolite		
G2	9	J8	AX	22	25	F	10.1	1.1	9.2	Tremolite		

PCM Equivalent Structures-ISO	188.9	Not Applicable	Not Applicable	17	

Gr	No.	Loc.	ID	Prim	Tot	Class	Len	Wid	Asp	Analyte	Elements	Comment
G1	3	I5	AX	8	9	F	24.5	0.6	40.8	Tremolite		
G1	5	D7	AX	16	19	F	8.85	0.6	14.8	Tremolite		
G1	5	D7	AX	14	17	F	10.8	0.8	13.5	Tremolite		
G1	4	H8	AX	10	11	F	32.5	0.6	54.2	Tremolite		
G1	2	D4	AX	3	3	F	7.5	2	3.8	Tremolite		
G1	1	B4	AX	1	1	F	6.8	1.15	5.9	Tremolite		
G1	4	H8	AX	11	12	F	14	2	7	Tremolite		
G2	10	D8	AX	24	27	F	6.5	0.4	16.2	Tremolite		
G2	6	B3	AX	17	20	F	15	0.7	21.4	Tremolite		
G2	10	D8	AX	28	31	F	6	0.6	10	Tremolite		
G2	10	D8	AX	27	30	F	17.75	1.75	10.1	Tremolite		
G2	10	D8	AX	26	29	F	7.5	0.85	8.8	Tremolite		

Lab/Cor, Inc.
7619 6th Ave Nw
Seattle, WA 98117

Phone: (206) 781-0155
Fax: (206) 789-8424
http://www.labcor.net

A Professional Service Corporation in the Northwest

ISO 10312, Direct Count Categories

Job Number: 070434 **SEA** **Report Number:** 070434R06
Client: Idaho National Laboratory **Date Received:** 4/23/2007
Project Name: RARE

Lab/Cor Sample No.: S33
Client Sample No.: FB-1-R1
Description:
Filter Fraction: 1
Residual Ash Vol:
Aliquot Dilution: 0
Final Dilution: 0
Volume (L): 0
Lab Filter Area (mm2): 385
Grid Openings Analyzed: 10
Average Grid Opening Area: 0.009
Area Analyzed (mm2): 0.09
Analytical Sens. (struc/cc): 0
Dectection Limit. (struc/cc): 0

Structure Type	Filter Density (s/mm2)	Concen-tration (struc/cc)	95% Confidence Interval (struc/cc)	Structure Count[1] Prim/Total
PCM Equivalent Structures-ISO	188.9	Not Applicable	Not Applicable	17

Gr	No.	Loc.	ID	Prim	Tot	Class	Len	Wid	Asp	Analyte	Elements	Comment
G2	9	J8	AX	22	25	F	10.1	1.1	9.2	Tremolite		
G2	8	G5	AX	21	24	F	13	1.2	10.8	Tremolite		
G2	6	B3	AX	18	21	F	7.7	1.2	6.4	Tremolite		
G2	8	G5	AX	20	23	F	6	0.5	12	Tremolite		
G2	9	J8	AX	23	26	F	13.5	0.75	18	Tremolite		

PCM Equivalent Fibers-NIOSH		Not Applicable	Not Applicable	20

Gr	No.	Loc.	ID	Prim	Tot	Class	Len	Wid	Asp	Analyte	Elements	Comment
G1	4	H8	AX	10	11	F	32.5	0.6	54.2	Tremolite		
G1	5	D7	AX	16	19	F	8.85	0.6	14.8	Tremolite		
G1	5	D7	AX	14	17	F	10.8	0.8	13.5	Tremolite		
G1	4	H8	AX	11	12	F	14	2	7	Tremolite		
G1	4	H8	AX		16	MF	10	0.5	20	Tremolite		
G1	3	I5	AX	8	9	F	24.5	0.6	40.8	Tremolite		
G1	2	D4	AX	3	3	F	7.5	2	3.8	Tremolite		
G1	1	B4	AX	1	1	F	6.8	1.15	5.9	Tremolite		
G1	4	H8	AZQ		13	MF	20	1	20	Tremolite		
G2	10	D8	AX		28	MF	12.5	1	12.5	Tremolite		
G2	6	B3	AX	17	20	F	15	0.7	21.4	Tremolite		
G2	10	D8	AX	27	30	F	17.75	1.75	10.1	Tremolite		
G2	10	D8	AX	28	31	F	6	0.6	10	Tremolite		
G2	10	D8	AX	26	29	F	7.5	0.85	8.8	Tremolite		
G2	10	D8	AX	24	27	F	6.5	0.4	16.2	Tremolite		
G2	9	J8	AX	22	25	F	10.1	1.1	9.2	Tremolite		
G2	8	G5	AX	21	24	F	13	1.2	10.8	Tremolite		
G2	6	B3	AX	18	21	F	7.7	1.2	6.4	Tremolite		
G2	8	G5	AX	20	23	F	6	0.5	12	Tremolite		
G2	9	J8	AX	23	26	F	13.5	0.75	18	Tremolite		

PCM Equivalent Structures-NIOSH	211.1	Not Applicable	Not Applicable	19

Gr	No.	Loc.	ID	Prim	Tot	Class	Len	Wid	Asp	Analyte	Elements	Comment
G1	4	H8	AX	10	11	F	32.5	0.6	54.2	Tremolite		
G1	5	D7	AX	16	19	F	8.85	0.6	14.8	Tremolite		
G1	5	D7	AX	14	17	F	10.8	0.8	13.5	Tremolite		
G1	4	H8	AX	11	12	F	14	2	7	Tremolite		
G1	3	I5	AX	8	9	F	24.5	0.6	40.8	Tremolite		

Lab/Cor, Inc.
7619 6th Ave Nw
Seattle, WA 98117

Phone: (206) 781-0155
Fax: (206) 789-8424
http://www.labcor.net

A Professional Service Corporation in the Northwest

ISO 10312, Direct Count Categories

Job Number: 070434 **SEA** **Report Number:** 070434R06
Client: Idaho National Laboratory **Date Received:** 4/23/2007
Project Name: RARE

Lab/Cor Sample No.: S33
Client Sample No.: FB-1-R1
Description:
Filter Fraction: 1 **Aliquot Dilution:** 0
Residual Ash Vol: **Final Dilution:** 0

Volume (L): 0
Lab Filter Area (mm2): 385
Grid Openings Analyzed: 10
Average Grid Opening Area: 0.009
Area Analyzed (mm2): 0.09
Analytical Sens. (struc/cc): 0
Dectection Limit. (struc/cc): 0

Structure Type	Filter Density (s/mm2)	Concen-tration (struc/cc)	95% Confidence Interval (struc/cc)	Structure Count[1] Prim/Total
PCM Equivalent Structures-NIOSH	211.1	Not Applicable	Not Applicable	19

Gr	No.	Loc.	ID	Prim	Tot	Class	Len	Wid	Asp	Analyte	Elements	Comment
G1	2	D4	AX	3	3	F	7.5	2	3.8	Tremolite		
G1	1	B4	AX	1	1	F	6.8	1.15	5.9	Tremolite		
G1	4	H8	AZQ	12		MD 3-1	25	6	4.2	Tremolite	Mg, Si, Ca, Fe	
G2	9	J8	AX	23	26	F	13.5	0.75	18	Tremolite		
G2	10	D8	AX	27	30	F	17.75	1.75	10.1	Tremolite		
G2	10	D8	AX	26	29	F	7.5	0.85	8.8	Tremolite		
G2	10	D8	AX	28	31	F	6	0.6	10	Tremolite		
G2	10	D8	AX	24	27	F	6.5	0.4	16.2	Tremolite		
G2	8	G5	AX	21	24	F	13	1.2	10.8	Tremolite		
G2	8	G5	AX	20	23	F	6	0.5	12	Tremolite		
G2	6	B3	AX	18	21	F	7.7	1.2	6.4	Tremolite		
G2	6	B3	AX	17	20	F	15	0.7	21.4	Tremolite		
G2	10	D8	AX	25		MD 1-1	15	5	3	Tremolite		
G2	9	J8	AX	22	25	F	10.1	1.1	9.2	Tremolite		

Asbestos Structures >5um and 3:1	222.2	Not Applicable	Not Applicable	20

Gr	No.	Loc.	ID	Prim	Tot	Class	Len	Wid	Asp	Analyte	Elements	Comment
G1	4	H8	AX	10	11	F	32.5	0.6	54.2	Tremolite		
G1	5	D7	AX	16	19	F	8.85	0.6	14.8	Tremolite		
G1	5	D7	AX	14	17	F	10.8	0.8	13.5	Tremolite		
G1	4	H8	AZQ	12		MD 3-1	25	6	4.2	Tremolite	Mg, Si, Ca, Fe	
G1	4	H8	AX	11	12	F	14	2	7	Tremolite		
G1	3	I5	AX	8	9	F	24.5	0.6	40.8	Tremolite		
G1	2	D4	AX	6		MD 1-0	7	7	1	Tremolite		
G1	1	B4	AX	1	1	F	6.8	1.15	5.9	Tremolite		
G1	4	H8	AX	13		MD 1-1	10	5	2	Tremolite		
G2	10	D8	AX	24	27	F	6.5	0.4	16.2	Tremolite		
G2	10	D8	AX	28	31	F	6	0.6	10	Tremolite		
G2	10	D8	AX	27	30	F	17.75	1.75	10.1	Tremolite		
G2	6	B3	AX	17	20	F	15	0.7	21.4	Tremolite		
G2	10	D8	AX	26	29	F	7.5	0.85	8.8	Tremolite		
G2	10	D8	AX	25		MD 1-1	15	5	3	Tremolite		
G2	9	J8	AX	22	25	F	10.1	1.1	9.2	Tremolite		
G2	8	G5	AX	21	24	F	13	1.2	10.8	Tremolite		
G2	6	B3	AX	18	21	F	7.7	1.2	6.4	Tremolite		

Lab/Cor, Inc.
7619 6th Ave Nw
Seattle, WA 98117

Phone: (206) 781-0155
Fax: (206) 789-8424
http://www.labcor.net

A Professional Service Corporation in the Northwest

ISO 10312, Direct Count Categories

Job Number: 070434 **SEA** **Report Number:** 070434R06
Client: Idaho National Laboratory **Date Received:** 4/23/2007
Project Name: RARE

Lab/Cor Sample No.: S33
Client Sample No.: FB-1-R1
Description:
Filter Fraction: 1
Residual Ash Vol:
Aliquot Dilution: 0
Final Dilution: 0
Volume (L): 0
Lab Filter Area (mm2): 385
Grid Openings Analyzed: 10
Average Grid Opening Area: 0.009
Area Analyzed (mm2): 0.09
Analytical Sens. (struc/cc): 0
Dectection Limit. (struc/cc): 0

Structure Type	Filter Density (s/mm2)	Concen-tration (struc/cc)	95% Confidence Interval (struc/cc)	Structure Count[1] Prim/Total
Asbestos Structures >5um and 3:1	222.2	Not Applicable	Not Applicable	20

Gr	No.	Loc.	ID	Prim	Tot	Class	Len	Wid	Asp	Analyte	Elements	Comment
G2	9	J8	AX	23	26	F	13.5	0.75	18	Tremolite		
G2	8	G5	AX	20	23	F	6	0.5	12	Tremolite		

Asbestos Fibers and Bundles > 5um and 3:1		Not Applicable	Not Applicable	19

Gr	No.	Loc.	ID	Prim	Tot	Class	Len	Wid	Asp	Analyte	Elements	Comment
G1	4	H8	AX	10	11	F	32.5	0.6	54.2	Tremolite		
G1	5	D7	AX	16	19	F	8.85	0.6	14.8	Tremolite		
G1	5	D7	AX	14	17	F	10.8	0.8	13.5	Tremolite		
G1	4	H8	AX	11	12	F	14	2	7	Tremolite		
G1	4	H8	AX		16	MF	10	0.5	20	Tremolite		
G1	3	I5	AX	8	9	F	24.5	0.6	40.8	Tremolite		
G1	1	B4	AX	1	1	F	6.8	1.15	5.9	Tremolite		
G1	4	H8	AZQ		13	MF	20	1	20	Tremolite		
G2	10	D8	AX		28	MF	12.5	1	12.5	Tremolite		
G2	9	J8	AX	23	26	F	13.5	0.75	18	Tremolite		
G2	10	D8	AX	28	31	F	6	0.6	10	Tremolite		
G2	10	D8	AX	27	30	F	17.75	1.75	10.1	Tremolite		
G2	10	D8	AX	24	27	F	6.5	0.4	16.2	Tremolite		
G2	8	G5	AX	21	24	F	13	1.2	10.8	Tremolite		
G2	8	G5	AX	20	23	F	6	0.5	12	Tremolite		
G2	6	B3	AX	18	21	F	7.7	1.2	6.4	Tremolite		
G2	6	B3	AX	17	20	F	15	0.7	21.4	Tremolite		
G2	9	J8	AX	22	25	F	10.1	1.1	9.2	Tremolite		
G2	10	D8	AX	26	29	F	7.5	0.85	8.8	Tremolite		

Lab/Cor, Inc.
7619 6th Ave Nw
Seattle, WA 98117

Phone: (206) 781-0155
Fax: (206) 789-8424
http://www.labcor.net

A Professional Service Corporation in the Northwest

ISO 10312, Direct Count Categories

Job Number: 070434 **SEA** **Report Number:** 070434R06
Client: Idaho National Laboratory **Date Received:** 4/23/2007
Project Name: RARE

Lab/Cor Sample No.: S35
Client Sample No.: FB-1-R3
Description:
Filter Fraction: 1 **Aliquot Dilution:** 0
Residual Ash Vol: **Final Dilution:** 0

Volume (L): 0
Lab Filter Area (mm2): 385
Grid Openings Analyzed: 10
Average Grid Opening Area: 0.009
Area Analyzed (mm2): 0.09
Analytical Sens. (struc/cc): 0
Dectection Limit. (struc/cc): 0

Structure Type	Filter Density (s/mm2)	Concen-tration (struc/cc)	95% Confidence Interval (struc/cc)	Structure Count[1] Prim/Total
PCM Equivalent Fibers-ISO		Not Applicable	Not Applicable	19

Gr	No.	Loc.	ID	Prim	Tot	Class	Len	Wid	Asp	Analyte	Elements	Comment
G1	2	I3	AX	9	9	F	45	0.9	50	Tremolite		
G1	5	E7	AX	22	22	F	6.2	0.4	15.5	Tremolite		
G1	5	E7	AX	21	21	F	10.6	1.1	9.6	Tremolite		
G1	5	E7	AX	20	20	F	6.2	0.55	11.3	Tremolite		
G1	5	E7	AX	19	19	F	20.5	2	10.2	Tremolite		
G1	4	J8	AX	18	18	F	5.8	0.85	6.8	Tremolite		
G1	4	J8	AX	17	17	F	12.5	0.55	22.7	Tremolite		
G1	4	J8	AX	16	16	F	12	1.75	6.9	Tremolite		
G1	3	G6	AX	12	12	F	15.5	1.2	12.9	Tremolite		
G1	2	I3	AX	7	7	F	7.25	0.4	18.1	Tremolite		
G1	1	E1	AZQ	1	1	F	9.8	0.6	16.3	Tremolite	Mg, Al, Si, Ca, Fe	
G1	1	E1	AX	6	6	F	5.5	1.25	4.4	Tremolite		
G1	1	E1	AX	4	4	F	8.8	1.2	7.3	Tremolite		
G1	4	J8	AX	14	14	F	48	1.85	25.9	Tremolite		
G2	7	F2	AX	25	25	F	35	2.25	15.6	Tremolite		
G2	10	D7	AX	31	31	F	10	1.5	6.7	Tremolite		
G2	10	D7	AX	30	30	F	8.85	0.8	11.1	Tremolite		
G2	9	I8	AX	29	29	F	9	0.45	20	Tremolite		
G2	9	I8	AX	28	28	F	10	1	10	Tremolite		

PCM Equivalent Structures-ISO	211.1	Not Applicable	Not Applicable	19	

Gr	No.	Loc.	ID	Prim	Tot	Class	Len	Wid	Asp	Analyte	Elements	Comment
G1	4	J8	AX	14	14	F	48	1.85	25.9	Tremolite		
G1	5	E7	AX	22	22	F	6.2	0.4	15.5	Tremolite		
G1	5	E7	AX	21	21	F	10.6	1.1	9.6	Tremolite		
G1	5	E7	AX	20	20	F	6.2	0.55	11.3	Tremolite		
G1	5	E7	AX	19	19	F	20.5	2	10.2	Tremolite		
G1	4	J8	AX	18	18	F	5.8	0.85	6.8	Tremolite		
G1	4	J8	AX	16	16	F	12	1.75	6.9	Tremolite		
G1	3	G6	AX	12	12	F	15.5	1.2	12.9	Tremolite		
G1	2	I3	AX	9	9	F	45	0.9	50	Tremolite		
G1	2	I3	AX	7	7	F	7.25	0.4	18.1	Tremolite		
G1	1	E1	AZQ	1	1	F	9.8	0.6	16.3	Tremolite	Mg, Al, Si, Ca, Fe	
G1	1	E1	AX	6	6	F	5.5	1.25	4.4	Tremolite		
G1	1	E1	AX	4	4	F	8.8	1.2	7.3	Tremolite		

Lab/Cor, Inc.
7619 6th Ave Nw
Seattle, WA 98117

Phone: (206) 781-0155
Fax: (206) 789-8424
http://www.labcor.net

A Professional Service Corporation in the Northwest

ISO 10312, Direct Count Categories

Job Number: 070434 **SEA** **Report Number:** 070434R06
Client: Idaho National Laboratory **Date Received:** 4/23/2007
Project Name: RARE

Lab/Cor Sample No.: S35
Client Sample No.: FB-1-R3
Description:
Filter Fraction: 1
Residual Ash Vol:
Aliquot Dilution: 0
Final Dilution: 0
Volume (L): 0
Lab Filter Area (mm2): 385
Grid Openings Analyzed: 10
Average Grid Opening Area: 0.009
Area Analyzed (mm2): 0.09
Analytical Sens. (struc/cc): 0
Dectection Limit. (struc/cc): 0

Structure Type	Filter Density (s/mm2)	Concen-tration (struc/cc)	95% Confidence Interval (struc/cc)	Structure Count[1] Prim/Total
PCM Equivalent Structures-ISO	211.1	Not Applicable	Not Applicable	19
PCM Equivalent Fibers-NIOSH		Not Applicable	Not Applicable	20
PCM Equivalent Structures-NIOSH	222.2	Not Applicable	Not Applicable	20

PCM Equivalent Structures-ISO

Gr	No.	Loc.	ID	Prim	Tot	Class	Len	Wid	Asp	Analyte	Elements	Comment
G1	4	J8	AX	17	17	F	12.5	0.55	22.7	Tremolite		
G2	9	I8	AX	29	29	F	9	0.45	20	Tremolite		
G2	10	D7	AX	30	30	F	8.85	0.8	11.1	Tremolite		
G2	7	F2	AX	25	25	F	35	2.25	15.6	Tremolite		
G2	10	D7	AX	31	31	F	10	1.5	6.7	Tremolite		
G2	9	I8	AX	28	28	F	10	1	10	Tremolite		

PCM Equivalent Fibers-NIOSH

Gr	No.	Loc.	ID	Prim	Tot	Class	Len	Wid	Asp	Analyte	Elements	Comment
G1	4	J8	AX	14	14	F	48	1.85	25.9	Tremolite		
G1	5	E7	AX	22	22	F	6.2	0.4	15.5	Tremolite		
G1	5	E7	AX	21	21	F	10.6	1.1	9.6	Tremolite		
G1	5	E7	AX	20	20	F	6.2	0.55	11.3	Tremolite		
G1	5	E7	AX	19	19	F	20.5	2	10.2	Tremolite		
G1	4	J8	AX	18	18	F	5.8	0.85	6.8	Tremolite		
G1	4	J8	AX	16	16	F	12	1.75	6.9	Tremolite		
G1	3	G6	AX	12	12	F	15.5	1.2	12.9	Tremolite		
G1	2	I3	AX	9	9	F	45	0.9	50	Tremolite		
G1	2	I3	AX	7	7	F	7.25	0.4	18.1	Tremolite		
G1	1	E1	AZQ	1	1	F	9.8	0.6	16.3	Tremolite	Mg, Al, Si, Ca, Fe	
G1	1	E1	AX	6	6	F	5.5	1.25	4.4	Tremolite		
G1	1	E1	AX	4	4	F	8.8	1.2	7.3	Tremolite		
G1	4	J8	AX	17	17	F	12.5	0.55	22.7	Tremolite		
G2	9	I8	AX	28	28	F	10	1	10	Tremolite		
G2	10	D7	AX	31	31	F	10	1.5	6.7	Tremolite		
G2	10	D7	AX	32	32	F	15.5	4.35	3.6	Tremolite		
G2	7	F2	AX	25	25	F	35	2.25	15.6	Tremolite		
G2	10	D7	AX	30	30	F	8.85	0.8	11.1	Tremolite		
G2	9	I8	AX	29	29	F	9	0.45	20	Tremolite		

PCM Equivalent Structures-NIOSH

Gr	No.	Loc.	ID	Prim	Tot	Class	Len	Wid	Asp	Analyte	Elements	Comment
G1	4	J8	AX	14	14	F	48	1.85	25.9	Tremolite		
G1	5	E7	AX	22	22	F	6.2	0.4	15.5	Tremolite		
G1	5	E7	AX	21	21	F	10.6	1.1	9.6	Tremolite		
G1	5	E7	AX	20	20	F	6.2	0.55	11.3	Tremolite		

Lab/Cor, Inc.
7619 6th Ave Nw
Seattle, WA 98117

Phone: (206) 781-0155
Fax: (206) 789-8424
http://www.labcor.net

A Professional Service Corporation in the Northwest

ISO 10312, Direct Count Categories

Job Number: 070434 **SEA** **Report Number:** 070434R06
Client: Idaho National Laboratory **Date Received:** 4/23/2007
Project Name: RARE

Lab/Cor Sample No.: S35
Client Sample No.: FB-1-R3
Description:
Filter Fraction: 1
Residual Ash Vol:
Aliquot Dilution: 0
Final Dilution: 0
Volume (L): 0
Lab Filter Area (mm2): 385
Grid Openings Analyzed: 10
Average Grid Opening Area: 0.009
Area Analyzed (mm2): 0.09
Analytical Sens. (struc/cc): 0
Dectection Limit. (struc/cc): 0

Structure Type	Filter Density (s/mm2)	Concen-tration (struc/cc)	95% Confidence Interval (struc/cc)	Structure Count[1] Prim/Total
PCM Equivalent Structures-NIOSH	222.2	Not Applicable	Not Applicable	20

Gr	No.	Loc.	ID	Prim	Tot	Class	Len	Wid	Asp	Analyte	Elements	Comment
G1	5	E7	AX	19	19	F	20.5	2	10.2	Tremolite		
G1	4	J8	AX	18	18	F	5.8	0.85	6.8	Tremolite		
G1	4	J8	AX	16	16	F	12	1.75	6.9	Tremolite		
G1	3	G6	AX	12	12	F	15.5	1.2	12.9	Tremolite		
G1	2	I3	AX	9	9	F	45	0.9	50	Tremolite		
G1	2	I3	AX	7	7	F	7.25	0.4	18.1	Tremolite		
G1	1	E1	AZQ	1	1	F	9.8	0.6	16.3	Tremolite	Mg, Al, Si, Ca, Fe	
G1	1	E1	AX	6	6	F	5.5	1.25	4.4	Tremolite		
G1	1	E1	AX	4	4	F	8.8	1.2	7.3	Tremolite		
G1	4	J8	AX	17	17	F	12.5	0.55	22.7	Tremolite		
G2	9	I8	AX	28	28	F	10	1	10	Tremolite		
G2	10	D7	AX	32	32	F	15.5	4.35	3.6	Tremolite		
G2	10	D7	AX	31	31	F	10	1.5	6.7	Tremolite		
G2	7	F2	AX	25	25	F	35	2.25	15.6	Tremolite		
G2	10	D7	AX	30	30	F	8.85	0.8	11.1	Tremolite		
G2	9	I8	AX	29	29	F	9	0.45	20	Tremolite		

Asbestos Structures >5um and 3:1	200.0	Not Applicable	Not Applicable	18

Gr	No.	Loc.	ID	Prim	Tot	Class	Len	Wid	Asp	Analyte	Elements	Comment
G1	4	J8	AX	14	14	F	48	1.85	25.9	Tremolite		
G1	5	E7	AX	22	22	F	6.2	0.4	15.5	Tremolite		
G1	5	E7	AX	21	21	F	10.6	1.1	9.6	Tremolite		
G1	5	E7	AX	20	20	F	6.2	0.55	11.3	Tremolite		
G1	5	E7	AX	19	19	F	20.5	2	10.2	Tremolite		
G1	4	J8	AX	18	18	F	5.8	0.85	6.8	Tremolite		
G1	4	J8	AX	16	16	F	12	1.75	6.9	Tremolite		
G1	3	G6	AX	12	12	F	15.5	1.2	12.9	Tremolite		
G1	2	I3	AX	9	9	F	45	0.9	50	Tremolite		
G1	2	I3	AX	7	7	F	7.25	0.4	18.1	Tremolite		
G1	1	E1	AZQ	1	1	F	9.8	0.6	16.3	Tremolite	Mg, Al, Si, Ca, Fe	
G1	1	E1	AX	4	4	F	8.8	1.2	7.3	Tremolite		
G1	4	J8	AX	17	17	F	12.5	0.55	22.7	Tremolite		
G2	9	I8	AX	28	28	F	10	1	10	Tremolite		
G2	10	D7	AX	31	31	F	10	1.5	6.7	Tremolite		
G2	7	F2	AX	25	25	F	35	2.25	15.6	Tremolite		

Lab/Cor, Inc.
7619 6th Ave Nw
Seattle, WA 98117

Phone: (206) 781-0155
Fax: (206) 789-8424
http://www.labcor.net

A Professional Service Corporation in the Northwest

ISO 10312, Direct Count Categories

Job Number: 070434 **SEA** **Report Number:** 070434R06
Client: Idaho National Laboratory **Date Received:** 4/23/2007
Project Name: RARE

Lab/Cor Sample No.: S35
Client Sample No.: FB-1-R3
Description:
Filter Fraction: 1
Residual Ash Vol:
Aliquot Dilution: 0
Final Dilution: 0
Volume (L): 0
Lab Filter Area (mm2): 385
Grid Openings Analyzed: 10
Average Grid Opening Area: 0.009
Area Analyzed (mm2): 0.09
Analytical Sens. (struc/cc): 0
Dectection Limit. (struc/cc): 0

Structure Type	Filter Density (s/mm2)	Concen-tration (struc/cc)	95% Confidence Interval (struc/cc)	Structure Count[1] Prim/Total
Asbestos Structures >5um and 3:1	200.0	Not Applicable	Not Applicable	18

Gr	No.	Loc.	ID	Prim	Tot	Class	Len	Wid	Asp	Analyte	Elements	Comment
G2	10	D7	AX	30	30	F	8.85	0.8	11.1	Tremolite		
G2	9	I8	AX	29	29	F	9	0.45	20	Tremolite		

Asbestos Fibers and Bundles > 5um and 3:1		Not Applicable	Not Applicable	18

Gr	No.	Loc.	ID	Prim	Tot	Class	Len	Wid	Asp	Analyte	Elements	Comment
G1	4	J8	AX	14	14	F	48	1.85	25.9	Tremolite		
G1	5	E7	AX	22	22	F	6.2	0.4	15.5	Tremolite		
G1	5	E7	AX	21	21	F	10.6	1.1	9.6	Tremolite		
G1	5	E7	AX	20	20	F	6.2	0.55	11.3	Tremolite		
G1	5	E7	AX	19	19	F	20.5	2	10.2	Tremolite		
G1	4	J8	AX	18	18	F	5.8	0.85	6.8	Tremolite		
G1	4	J8	AX	16	16	F	12	1.75	6.9	Tremolite		
G1	3	G6	AX	12	12	F	15.5	1.2	12.9	Tremolite		
G1	2	I3	AX	9	9	F	45	0.9	50	Tremolite		
G1	2	I3	AX	7	7	F	7.25	0.4	18.1	Tremolite		
G1	1	E1	AZQ	1	1	F	9.8	0.6	16.3	Tremolite	Mg, Al, Si, Ca, Fe	
G1	1	E1	AX	4	4	F	8.8	1.2	7.3	Tremolite		
G1	4	J8	AX	17	17	F	12.5	0.55	22.7	Tremolite		
G2	9	I8	AX	29	29	F	9	0.45	20	Tremolite		
G2	10	D7	AX	30	30	F	8.85	0.8	11.1	Tremolite		
G2	7	F2	AX	25	25	F	35	2.25	15.6	Tremolite		
G2	9	I8	AX	28	28	F	10	1	10	Tremolite		
G2	10	D7	AX	31	31	F	10	1.5	6.7	Tremolite		

Lab/Cor, Inc.
7619 6th Ave Nw
Seattle, WA 98117

Phone: (206) 781-0155
Fax: (206) 789-8424
http://www.labcor.net

A Professional Service Corporation in the Northwest

ISO 10312, Direct Count Categories

Job Number: 070434 **SEA** **Report Number:** 070434R06
Client: Idaho National Laboratory **Date Received:** 4/23/2007
Project Name: RARE

Lab/Cor Sample No.: S36
Client Sample No.: FB-1-R4
Description:
Filter Fraction: 1 **Aliquot Dilution:** 0
Residual Ash Vol: **Final Dilution:** 0

Volume (L): 0
Lab Filter Area (mm2): 385
Grid Openings Analyzed: 10
Average Grid Opening Area: 0.009
Area Analyzed (mm2): 0.09
Analytical Sens. (struc/cc): 0
Dectection Limit. (struc/cc): 0

Structure Type	Filter Density (s/mm2)	Concen-tration (struc/cc)	95% Confidence Interval (struc/cc)	Structure Count[1] Prim/Total
PCM Equivalent Fibers-ISO		Not Applicable	Not Applicable	15

Gr	No.	Loc.	ID	Prim	Tot	Class	Len	Wid	Asp	Analyte	Elements	Comment
G1	5	F9	AX	17	17	F	27.5	2.2	12.5	Tremolite		
G1	1	B3	AX	1	1	F	7	2	3.5	Tremolite		
G1	2	F1	AX	7	7	F	40	2.1	19	Tremolite		
G1	3	I3	AX	11	11	F	7.25	0.4	18.1	Tremolite		
G1	4	D5	AX		14	MF	7	0.6	11.7	Tremolite		
G1	4	D5	AX	15	15	F	10.2	0.9	11.3	Tremolite		
G1	5	F9	AX	16	16	F	7	0.5	14	Tremolite		
G2	10	C7	AX	30	30	F	21.5	1.8	11.9	Tremolite		
G2	9	H9	AX	29	29	F	10.1	1.8	5.6	Tremolite		
G2	8	G6	AX		27	MF	5.4	0.4	13.5	Tremolite		
G2	8	G6	AX		26	MF	7.2	1	7.2	Tremolite		
G2	7	I4	AX	25	25	F	5.7	1.5	3.8	Tremolite		
G2	7	I4	AX	23	23	F	17	0.5	34	Tremolite		
G2	6	D1	AX	18	18	F	5.2	0.65	8	Tremolite		
G2	7	I4	AX	21	21	F	15.75	2.8	5.6	Tremolite		

PCM Equivalent Structures-ISO	133.3	Not Applicable	Not Applicable	12	

Gr	No.	Loc.	ID	Prim	Tot	Class	Len	Wid	Asp	Analyte	Elements	Comment
G1	2	F1	AX	7	7	F	40	2.1	19	Tremolite		
G1	5	F9	AX	16	16	F	7	0.5	14	Tremolite		
G1	5	F9	AX	17	17	F	27.5	2.2	12.5	Tremolite		
G1	1	B3	AX	1	1	F	7	2	3.5	Tremolite		
G1	4	D5	AX	15	15	F	10.2	0.9	11.3	Tremolite		
G1	3	I3	AX	11	11	F	7.25	0.4	18.1	Tremolite		
G2	6	D1	AX	18	18	F	5.2	0.65	8	Tremolite		
G2	7	I4	AX	21	21	F	15.75	2.8	5.6	Tremolite		
G2	7	I4	AX	23	23	F	17	0.5	34	Tremolite		
G2	7	I4	AX	25	25	F	5.7	1.5	3.8	Tremolite		
G2	9	H9	AX	29	29	F	10.1	1.8	5.6	Tremolite		
G2	10	C7	AX	30	30	F	21.5	1.8	11.9	Tremolite		

PCM Equivalent Fibers-NIOSH		Not Applicable	Not Applicable		17

Gr	No.	Loc.	ID	Prim	Tot	Class	Len	Wid	Asp	Analyte	Elements	Comment
G1	1	B3	AX	2	2	F	30	4.5	6.7	Tremolite		
G1	5	F9	AX	17	17	F	27.5	2.2	12.5	Tremolite		
G1	5	F9	AX	16	16	F	7	0.5	14	Tremolite		

Lab/Cor, Inc.
7619 6th Ave Nw
Seattle, WA 98117

Phone: (206) 781-0155
Fax: (206) 789-8424
http://www.labcor.net

A Professional Service Corporation in the Northwest

ISO 10312, Direct Count Categories

Job Number: 070434 **SEA** **Report Number:** 070434R06
Client: Idaho National Laboratory **Date Received:** 4/23/2007
Project Name: RARE

Lab/Cor Sample No.: S36
Client Sample No.: FB-1-R4
Description:
Filter Fraction: 1
Residual Ash Vol:
Aliquot Dilution: 0
Final Dilution: 0
Volume (L): 0
Lab Filter Area (mm2): 385
Grid Openings Analyzed: 10
Average Grid Opening Area: 0.009
Area Analyzed (mm2): 0.09
Analytical Sens. (struc/cc): 0
Dectection Limit. (struc/cc): 0

Structure Type	Filter Density (s/mm2)	Concen-tration (struc/cc)	95% Confidence Interval (struc/cc)	Structure Count[1] Prim/Total
PCM Equivalent Fibers-NIOSH		Not Applicable	Not Applicable	17

Gr	No.	Loc.	ID	Prim	Tot	Class	Len	Wid	Asp	Analyte	Elements	Comment
G1	4	D5	AX	15	15	F	10.2	0.9	11.3	Tremolite		
G1	4	D5	AX		14	MF	7	0.6	11.7	Tremolite		
G1	2	F1	AX	7	7	F	40	2.1	19	Tremolite		
G1	1	B3	AX	1	1	F	7	2	3.5	Tremolite		
G1	3	I3	AX	11	11	F	7.25	0.4	18.1	Tremolite		
G2	8	G6	AX		27	MF	5.4	0.4	13.5	Tremolite		
G2	6	D1	AX	18	18	F	5.2	0.65	8	Tremolite		
G2	10	C7	AX	33	33	F	30	5	6	Tremolite		
G2	10	C7	AX	30	30	F	21.5	1.8	11.9	Tremolite		
G2	9	H9	AX	29	29	F	10.1	1.8	5.6	Tremolite		
G2	8	G6	AX		26	MF	7.2	1	7.2	Tremolite		
G2	7	I4	AX	25	25	F	5.7	1.5	3.8	Tremolite		
G2	7	I4	AX	21	21	F	15.75	2.8	5.6	Tremolite		
G2	7	I4	AX	23	23	F	17	0.5	34	Tremolite		

PCM Equivalent Structures-NIOSH	166.7	Not Applicable	Not Applicable	15	

Gr	No.	Loc.	ID	Prim	Tot	Class	Len	Wid	Asp	Analyte	Elements	Comment
G1	1	B3	AX	1	1	F	7	2	3.5	Tremolite		
G1	1	B3	AX	2	2	F	30	4.5	6.7	Tremolite		
G1	2	F1	AX	7	7	F	40	2.1	19	Tremolite		
G1	3	I3	AX	11	11	F	7.25	0.4	18.1	Tremolite		
G1	4	D5	AX	15	15	F	10.2	0.9	11.3	Tremolite		
G1	5	F9	AX	16	16	F	7	0.5	14	Tremolite		
G1	5	F9	AX	17	17	F	27.5	2.2	12.5	Tremolite		
G2	8	G6	AX	26		MD 1-1	11.5	3.5	3.3	Tremolite		
G2	10	C7	AX	30	30	F	21.5	1.8	11.9	Tremolite		
G2	10	C7	AX	33	33	F	30	5	6	Tremolite		
G2	9	H9	AX	29	29	F	10.1	1.8	5.6	Tremolite		
G2	7	I4	AX	23	23	F	17	0.5	34	Tremolite		
G2	6	D1	AX	18	18	F	5.2	0.65	8	Tremolite		
G2	7	I4	AX	21	21	F	15.75	2.8	5.6	Tremolite		
G2	7	I4	AX	25	25	F	5.7	1.5	3.8	Tremolite		

Asbestos Structures >5um and 3:1	166.7	Not Applicable	Not Applicable	15	

Gr	No.	Loc.	ID	Prim	Tot	Class	Len	Wid	Asp	Analyte	Elements	Comment
G1	5	F9	AX	17	17	F	27.5	2.2	12.5	Tremolite		

Lab/Cor, Inc.
7619 6th Ave Nw
Seattle, WA 98117

Phone: (206) 781-0155
Fax: (206) 789-8424
http://www.labcor.net

A Professional Service Corporation in the Northwest

ISO 10312, Direct Count Categories

Job Number: 070434 **SEA** **Report Number:** 070434R06
Client: Idaho National Laboratory **Date Received:** 4/23/2007
Project Name: RARE

Lab/Cor Sample No.: S36
Client Sample No.: FB-1-R4
Description:
Filter Fraction: 1 **Aliquot Dilution:** 0
Residual Ash Vol: **Final Dilution:** 0

Volume (L): 0
Lab Filter Area (mm2): 385
Grid Openings Analyzed: 10
Average Grid Opening Area: 0.009
Area Analyzed (mm2): 0.09
Analytical Sens. (struc/cc): 0
Dectection Limit. (struc/cc): 0

Structure Type	Filter Density (s/mm2)	Concen-tration (struc/cc)	95% Confidence Interval (struc/cc)	Structure Count[1] Prim/Total	
Asbestos Structures >5um and 3:1	166.7	Not Applicable	Not Applicable	15	

Gr	No.	Loc.	ID	Prim	Tot	Class	Len	Wid	Asp	Analyte	Elements	Comment
G1	1	B3	AX	2	2	F	30	4.5	6.7	Tremolite		
G1	2	F1	AX	7	7	F	40	2.1	19	Tremolite		
G1	3	I3	AX	11	11	F	7.25	0.4	18.1	Tremolite		
G1	4	D5	AX	14		MD 1-1	10	7	1.4	Tremolite		
G1	4	D5	AX	15	15	F	10.2	0.9	11.3	Tremolite		
G1	5	F9	AX	16	16	F	7	0.5	14	Tremolite		
G2	10	C7	AX	33	33	F	30	5	6	Tremolite		
G2	10	C7	AX	30	30	F	21.5	1.8	11.9	Tremolite		
G2	9	H9	AX	29	29	F	10.1	1.8	5.6	Tremolite		
G2	8	G6	AX	27		MD 1-1	13	10	1.3	Tremolite		
G2	8	G6	AX	26		MD 1-1	11.5	3.5	3.3	Tremolite		
G2	7	I4	AX	23	23	F	17	0.5	34	Tremolite		
G2	6	D1	AX	18	18	F	5.2	0.65	8	Tremolite		
G2	7	I4	AX	21	21	F	15.75	2.8	5.6	Tremolite		

Asbestos Fibers and Bundles > 5um and 3:1		Not Applicable	Not Applicable		15

Gr	No.	Loc.	ID	Prim	Tot	Class	Len	Wid	Asp	Analyte	Elements	Comment
G1	3	I3	AX	11	11	F	7.25	0.4	18.1	Tremolite		
G1	5	F9	AX	16	16	F	7	0.5	14	Tremolite		
G1	5	F9	AX	17	17	F	27.5	2.2	12.5	Tremolite		
G1	2	F1	AX	7	7	F	40	2.1	19	Tremolite		
G1	1	B3	AX	2	2	F	30	4.5	6.7	Tremolite		
G1	4	D5	AX	15	15	F	10.2	0.9	11.3	Tremolite		
G1	4	D5	AX		14	MF	7	0.6	11.7	Tremolite		
G2	10	C7	AX	30	30	F	21.5	1.8	11.9	Tremolite		
G2	10	C7	AX	33	33	F	30	5	6	Tremolite		
G2	9	H9	AX	29	29	F	10.1	1.8	5.6	Tremolite		
G2	8	G6	AX		27	MF	5.4	0.4	13.5	Tremolite		
G2	8	G6	AX		26	MF	7.2	1	7.2	Tremolite		
G2	7	I4	AX	23	23	F	17	0.5	34	Tremolite		
G2	7	I4	AX	21	21	F	15.75	2.8	5.6	Tremolite		
G2	6	D1	AX	18	18	F	5.2	0.65	8	Tremolite		

Lab/Cor, Inc.
7619 6th Ave Nw
Seattle, WA 98117

Phone: (206) 781-0155
Fax: (206) 789-8424
http://www.labcor.net

A Professional Service Corporation in the Northwest

ISO 10312, Direct Count Categories

Job Number: 070434 **SEA** **Report Number:** 070434R06
Client: Idaho National Laboratory **Date Received:** 4/23/2007
Project Name: RARE

Lab/Cor Sample No.: S37
Client Sample No.: FB-1-R5
Description:
Filter Fraction: 1 **Aliquot Dilution:** 0
Residual Ash Vol: **Final Dilution:** 0

Volume (L): 0
Lab Filter Area (mm2): 385
Grid Openings Analyzed: 10
Average Grid Opening Area: 0.009
Area Analyzed (mm2): 0.09
Analytical Sens. (struc/cc): 0
Dectection Limit. (struc/cc): 0

Structure Type	Filter Density (s/mm2)	Concen-tration (struc/cc)	95% Confidence Interval (struc/cc)	Structure Count[1] Prim/Total
PCM Equivalent Fibers-ISO		Not Applicable	Not Applicable	13

Gr	No.	Loc.	ID	Prim	Tot	Class	Len	Wid	Asp	Analyte	Elements	Comment
G1	2	F1	AX	4	4	F	20.3	1	20.3	Tremolite		
G1	3	I3	AQ	6	6	F	10	1.5	6.7	Tremolite	Mg, Si, Ca, Fe	
G1	4	G5	AX		7	MF	8	1.25	6.4	Tremolite		
G1	4	G5	AX		9	MF	44	0.7	62.9	Tremolite		
G1	5	F10	AZQ	10	10	F	14.5	0.45	32.2	Tremolite	Mg, Si, Ca, Fe	
G1	1	B2	AX	2	2	F	5.1	0.5	10.2	Tremolite		
G2	8	H4	AX	21	21	F	42	1	42	Tremolite		
G2	6	B5	AX	12	12	F	5.8	1	5.8	Tremolite		
G2	10	D8	AX	25	25	F	12.5	0.45	27.8	Tremolite		
G2	10	D8	AX		24	MF	10.12	0.6	16.9	Tremolite		
G2	6	B5	AX	14	14	F	20	2.85	7	Tremolite		
G2	6	B5	AX	13	13	F	7.65	0.6	12.8	Tremolite		
G2	7	E2	AX	15	15	F	5.7	1	5.7	Tremolite		

PCM Equivalent Structures-ISO	122.2	Not Applicable	Not Applicable	11	

Gr	No.	Loc.	ID	Prim	Tot	Class	Len	Wid	Asp	Analyte	Elements	Comment
G1	1	B2	AX	2	2	F	5.1	0.5	10.2	Tremolite		
G1	2	F1	AX	4	4	F	20.3	1	20.3	Tremolite		
G1	3	I3	AQ	6	6	F	10	1.5	6.7	Tremolite	Mg, Si, Ca, Fe	
G1	5	F10	AZQ	10	10	F	14.5	0.45	32.2	Tremolite	Mg, Si, Ca, Fe	
G2	6	B5	AX	12	12	F	5.8	1	5.8	Tremolite		
G2	10	D8	AX	25	25	F	12.5	0.45	27.8	Tremolite		
G2	10	D8	AX	24		MD 1-1	13	3	4.3	Tremolite		
G2	8	H4	AX	21	21	F	42	1	42	Tremolite		
G2	7	E2	AX	15	15	F	5.7	1	5.7	Tremolite		
G2	6	B5	AX	13	13	F	7.65	0.6	12.8	Tremolite		
G2	6	B5	AX	14	14	F	20	2.85	7	Tremolite		

PCM Equivalent Fibers-NIOSH		Not Applicable	Not Applicable		13

Gr	No.	Loc.	ID	Prim	Tot	Class	Len	Wid	Asp	Analyte	Elements	Comment
G1	4	G5	AX		7	MF	8	1.25	6.4	Tremolite		
G1	3	I3	AQ	6	6	F	10	1.5	6.7	Tremolite	Mg, Si, Ca, Fe	
G1	5	F10	AZQ	10	10	F	14.5	0.45	32.2	Tremolite	Mg, Si, Ca, Fe	
G1	1	B2	AX	2	2	F	5.1	0.5	10.2	Tremolite		
G1	2	F1	AX	4	4	F	20.3	1	20.3	Tremolite		
G1	4	G5	AX		9	MF	44	0.7	62.9	Tremolite		

Lab/Cor, Inc.
7619 6th Ave Nw
Seattle, WA 98117

Phone: (206) 781-0155
Fax: (206) 789-8424
http://www.labcor.net

A Professional Service Corporation in the Northwest

ISO 10312, Direct Count Categories

Job Number: 070434 **SEA** **Report Number:** 070434R06
Client: Idaho National Laboratory **Date Received:** 4/23/2007
Project Name: RARE

Lab/Cor Sample No.: S37
Client Sample No.: FB-1-R5
Description:
Filter Fraction: 1 **Aliquot Dilution:** 0
Residual Ash Vol: **Final Dilution:** 0

Volume (L): 0
Lab Filter Area (mm2): 385
Grid Openings Analyzed: 10
Average Grid Opening Area: 0.009
Area Analyzed (mm2): 0.09
Analytical Sens. (struc/cc): 0
Dectection Limit. (struc/cc): 0

Structure Type	Filter Density (s/mm2)	Concen-tration (struc/cc)	95% Confidence Interval (struc/cc)	Structure Count[1] Prim/Total
PCM Equivalent Fibers-NIOSH		Not Applicable	Not Applicable	13

Gr	No.	Loc.	ID	Prim	Tot	Class	Len	Wid	Asp	Analyte	Elements	Comment
G2	10	D8	AX		24	MF	10.12	0.6	16.9	Tremolite		
G2	10	D8	AX	25	25	F	12.5	0.45	27.8	Tremolite		
G2	8	H4	AX	21	21	F	42	1	42	Tremolite		
G2	7	E2	AX	15	15	F	5.7	1	5.7	Tremolite		
G2	6	B5	AX	14	14	F	20	2.85	7	Tremolite		
G2	6	B5	AX	13	13	F	7.65	0.6	12.8	Tremolite		
G2	6	B5	AX	12	12	F	5.8	1	5.8	Tremolite		

PCM Equivalent Structures-NIOSH	133.3	Not Applicable	Not Applicable	12	

Gr	No.	Loc.	ID	Prim	Tot	Class	Len	Wid	Asp	Analyte	Elements	Comment
G1	2	F1	AX	4	4	F	20.3	1	20.3	Tremolite		
G1	3	I3	AQ	6	6	F	10	1.5	6.7	Tremolite	Mg, Si, Ca, Fe	
G1	4	G5	AX	9		MD 1-1	44	10	4.4	Tremolite		
G1	5	F10	AZQ	10	10	F	14.5	0.45	32.2	Tremolite	Mg, Si, Ca, Fe	
G1	1	B2	AX	2	2	F	5.1	0.5	10.2	Tremolite		
G2	8	H4	AX	21	21	F	42	1	42	Tremolite		
G2	10	D8	AX	24		MD 1-1	13	3	4.3	Tremolite		
G2	7	E2	AX	15	15	F	5.7	1	5.7	Tremolite		
G2	6	B5	AX	13	13	F	7.65	0.6	12.8	Tremolite		
G2	6	B5	AX	12	12	F	5.8	1	5.8	Tremolite		
G2	10	D8	AX	25	25	F	12.5	0.45	27.8	Tremolite		
G2	6	B5	AX	14	14	F	20	2.85	7	Tremolite		

Asbestos Structures >5um and 3:1	144.4	Not Applicable	Not Applicable	13	

Gr	No.	Loc.	ID	Prim	Tot	Class	Len	Wid	Asp	Analyte	Elements	Comment
G1	5	F10	AZQ	10	10	F	14.5	0.45	32.2	Tremolite	Mg, Si, Ca, Fe	
G1	1	B2	AX	2	2	F	5.1	0.5	10.2	Tremolite		
G1	2	F1	AX	4	4	F	20.3	1	20.3	Tremolite		
G1	3	I3	AQ	6	6	F	10	1.5	6.7	Tremolite	Mg, Si, Ca, Fe	
G1	4	G5	AX	7		MD 1-1	9	5	1.8	Tremolite		
G1	4	G5	AX	9		MD 1-1	44	10	4.4	Tremolite		
G2	10	D8	AX	25	25	F	12.5	0.45	27.8	Tremolite		
G2	10	D8	AX	24		MD 1-1	13	3	4.3	Tremolite		
G2	8	H4	AX	21	21	F	42	1	42	Tremolite		
G2	7	E2	AX	15	15	F	5.7	1	5.7	Tremolite		
G2	6	B5	AX	14	14	F	20	2.85	7	Tremolite		

Lab/Cor, Inc.
7619 6th Ave Nw
Seattle, WA 98117

Phone: (206) 781-0155
Fax: (206) 789-8424
http://www.labcor.net

A Professional Service Corporation in the Northwest

ISO 10312, Direct Count Categories

Job Number: 070434 **SEA** **Report Number:** 070434R06
Client: Idaho National Laboratory **Date Received:** 4/23/2007
Project Name: RARE

Lab/Cor Sample No.: S37
Client Sample No.: FB-1-R5
Description:
Filter Fraction: 1
Residual Ash Vol:
Aliquot Dilution: 0
Final Dilution: 0
Volume (L): 0
Lab Filter Area (mm2): 385
Grid Openings Analyzed: 10
Average Grid Opening Area: 0.009
Area Analyzed (mm2): 0.09
Analytical Sens. (struc/cc): 0
Dectection Limit. (struc/cc): 0

Structure Type	Filter Density (s/mm2)	Concen-tration (struc/cc)	95% Confidence Interval (struc/cc)	Structure Count[1] Prim/Total
Asbestos Structures >5um and 3:1	144.4	Not Applicable	Not Applicable	13
Asbestos Fibers and Bundles > 5um and 3:1		Not Applicable	Not Applicable	13

Gr	No.	Loc.	ID	Prim	Tot	Class	Len	Wid	Asp	Analyte	Elements	Comment
G2	6	B5	AX	12	12	F	5.8	1	5.8	Tremolite		
G2	6	B5	AX	13	13	F	7.65	0.6	12.8	Tremolite		
G1	3	I3	AQ	6	6	F	10	1.5	6.7	Tremolite	Mg, Si, Ca, Fe	
G1	5	F10	AZQ	10	10	F	14.5	0.45	32.2	Tremolite	Mg, Si, Ca, Fe	
G1	4	G5	AX		7	MF	8	1.25	6.4	Tremolite		
G1	1	B2	AX	2	2	F	5.1	0.5	10.2	Tremolite		
G1	2	F1	AX	4	4	F	20.3	1	20.3	Tremolite		
G1	4	G5	AX		9	MF	44	0.7	62.9	Tremolite		
G2	10	D8	AX	25	25	F	12.5	0.45	27.8	Tremolite		
G2	6	B5	AX	12	12	F	5.8	1	5.8	Tremolite		
G2	6	B5	AX	13	13	F	7.65	0.6	12.8	Tremolite		
G2	6	B5	AX	14	14	F	20	2.85	7	Tremolite		
G2	7	E2	AX	15	15	F	5.7	1	5.7	Tremolite		
G2	8	H4	AX	21	21	F	42	1	42	Tremolite		
G2	10	D8	AX		24	MF	10.12	0.6	16.9	Tremolite		

Lab/Cor, Inc.
7619 6th Ave Nw
Seattle, WA 98117

Phone: (206) 781-0155
Fax: (206) 789-8424
http://www.labcor.net

A Professional Service Corporation in the Northwest

ISO 10312, Direct Count Categories

Job Number: 070434 **SEA** **Report Number:** 070434R06
Client: Idaho National Laboratory **Date Received:** 4/23/2007
Project Name: RARE

Lab/Cor Sample No.: S38
Client Sample No.: FB-1-R6
Description:
Filter Fraction: 1 **Aliquot Dilution:** 0
Residual Ash Vol: **Final Dilution:** 0

Volume (L): 0
Lab Filter Area (mm2): 385
Grid Openings Analyzed: 10
Average Grid Opening Area: 0.009
Area Analyzed (mm2): 0.09
Analytical Sens. (struc/cc): 0
Dectection Limit. (struc/cc): 0

Structure Type	Filter Density (s/mm2)	Concen-tration (struc/cc)	95% Confidence Interval (struc/cc)	Structure Count[1] Prim/Total
PCM Equivalent Fibers-ISO		Not Applicable	Not Applicable	15

Gr	No.	Loc.	ID	Prim	Tot	Class	Len	Wid	Asp	Analyte	Elements	Comment
G1	5	D8	AX	14	14	F	26	0.5	52	Tremolite		
G1	4	G10	AX	11	11	F	9.85	1.3	7.6	Tremolite		
G1	4	G10	AX	10	10	F	6.2	1.75	3.5	Tremolite		
G1	4	G10	AX	9	9	F	13	0.55	23.6	Tremolite		
G1	3	I5	AX	8	8	F	6.2	0.5	12.4	Tremolite		
G1	2	F3	AX	3	3	F	9.3	0.7	13.3	Tremolite		
G1	3	I5	AX	6	6	F	24	0.9	26.7	Tremolite		
G2	9	G7	AX	22	22	F	5.15	0.6	8.6	Tremolite		
G2	9	G7	AX	24	24	F	8	0.85	9.4	Tremolite		
G2	9	G7	AX	23	23	F	12.5	0.4	31.2	Tremolite		
G2	8	I4	AX	20	20	F	5.65	0.75	7.5	Tremolite		
G2	7	D3	AX	17	17	F	7.5	0.8	9.4	Tremolite		
G2	6	A4	AX	15	15	F	10.35	0.7	14.8	Tremolite		
G2	10	D7	AX	25	25	F	24	0.4	60	Tremolite		
G2	8	I4	AX	21	21	F	9	0.7	12.9	Tremolite		

PCM Equivalent Structures-ISO	177.8	Not Applicable	Not Applicable	16	

Gr	No.	Loc.	ID	Prim	Tot	Class	Len	Wid	Asp	Analyte	Elements	Comment
G1	3	I5	AX	6	6	F	24	0.9	26.7	Tremolite		
G1	5	D8	AX	14	14	F	26	0.5	52	Tremolite		
G1	4	G10	AX	11	11	F	9.85	1.3	7.6	Tremolite		
G1	4	G10	AX	10	10	F	6.2	1.75	3.5	Tremolite		
G1	3	I5	AX	8	8	F	6.2	0.5	12.4	Tremolite		
G1	2	F3	AX	5		MD 1-0	5.1	1.5	3.4	Tremolite		
G1	2	F3	AX	3	3	F	9.3	0.7	13.3	Tremolite		
G1	4	G10	AX	9	9	F	13	0.55	23.6	Tremolite		
G2	9	G7	AX	22	22	F	5.15	0.6	8.6	Tremolite		
G2	9	G7	AX	24	24	F	8	0.85	9.4	Tremolite		
G2	10	D7	AX	25	25	F	24	0.4	60	Tremolite		
G2	9	G7	AX	23	23	F	12.5	0.4	31.2	Tremolite		
G2	8	I4	AX	20	20	F	5.65	0.75	7.5	Tremolite		
G2	6	A4	AX	15	15	F	10.35	0.7	14.8	Tremolite		
G2	7	D3	AX	17	17	F	7.5	0.8	9.4	Tremolite		
G2	8	I4	AX	21	21	F	9	0.7	12.9	Tremolite		

Lab/Cor, Inc.
7619 6th Ave Nw
Seattle, WA 98117

Phone: (206) 781-0155
Fax: (206) 789-8424
http://www.labcor.net

A Professional Service Corporation in the Northwest

ISO 10312, Direct Count Categories

Job Number: 070434 **SEA** **Report Number:** 070434R06
Client: Idaho National Laboratory **Date Received:** 4/23/2007
Project Name: RARE

Lab/Cor Sample No.: S38
Client Sample No.: FB-1-R6
Description:
Filter Fraction: 1 **Aliquot Dilution:** 0
Residual Ash Vol: **Final Dilution:** 0

Volume (L): 0
Lab Filter Area (mm2): 385
Grid Openings Analyzed: 10
Average Grid Opening Area: 0.009
Area Analyzed (mm2): 0.09
Analytical Sens. (struc/cc): 0
Dectection Limit. (struc/cc): 0

Structure Type	Filter Density (s/mm2)	Concen-tration (struc/cc)	95% Confidence Interval (struc/cc)	Structure Count[1] Prim/Total
PCM Equivalent Fibers-NIOSH		Not Applicable	Not Applicable	15

Gr	No.	Loc.	ID	Prim	Tot	Class	Len	Wid	Asp	Analyte	Elements	Comment
G1	5	D8	AX	14	14	F	26	0.5	52	Tremolite		
G1	3	I5	AX	6	6	F	24	0.9	26.7	Tremolite		
G1	3	I5	AX	8	8	F	6.2	0.5	12.4	Tremolite		
G1	4	G10	AX	9	9	F	13	0.55	23.6	Tremolite		
G1	4	G10	AX	10	10	F	6.2	1.75	3.5	Tremolite		
G1	4	G10	AX	11	11	F	9.85	1.3	7.6	Tremolite		
G1	2	F3	AX	3	3	F	9.3	0.7	13.3	Tremolite		
G2	10	D7	AX	25	25	F	24	0.4	60	Tremolite		
G2	9	G7	AX	24	24	F	8	0.85	9.4	Tremolite		
G2	9	G7	AX	23	23	F	12.5	0.4	31.2	Tremolite		
G2	9	G7	AX	22	22	F	5.15	0.6	8.6	Tremolite		
G2	8	I4	AX	21	21	F	9	0.7	12.9	Tremolite		
G2	8	I4	AX	20	20	F	5.65	0.75	7.5	Tremolite		
G2	6	A4	AX	15	15	F	10.35	0.7	14.8	Tremolite		
G2	7	D3	AX	17	17	F	7.5	0.8	9.4	Tremolite		

PCM Equivalent Structures-NIOSH	177.8	Not Applicable	Not Applicable	16	

Gr	No.	Loc.	ID	Prim	Tot	Class	Len	Wid	Asp	Analyte	Elements	Comment
G1	4	G10	AX	10	10	F	6.2	1.75	3.5	Tremolite		
G1	3	I5	AX	6	6	F	24	0.9	26.7	Tremolite		
G1	5	D8	AX	14	14	F	26	0.5	52	Tremolite		
G1	4	G10	AX	11	11	F	9.85	1.3	7.6	Tremolite		
G1	3	I5	AX	8	8	F	6.2	0.5	12.4	Tremolite		
G1	2	F3	AX	3	3	F	9.3	0.7	13.3	Tremolite		
G1	2	F3	AX	5		MD 1-0	5.1	1.5	3.4	Tremolite		
G1	4	G10	AX	9	9	F	13	0.55	23.6	Tremolite		
G2	9	G7	AX	24	24	F	8	0.85	9.4	Tremolite		
G2	10	D7	AX	25	25	F	24	0.4	60	Tremolite		
G2	9	G7	AX	23	23	F	12.5	0.4	31.2	Tremolite		
G2	9	G7	AX	22	22	F	5.15	0.6	8.6	Tremolite		
G2	8	I4	AX	21	21	F	9	0.7	12.9	Tremolite		
G2	8	I4	AX	20	20	F	5.65	0.75	7.5	Tremolite		
G2	7	D3	AX	17	17	F	7.5	0.8	9.4	Tremolite		
G2	6	A4	AX	15	15	F	10.35	0.7	14.8	Tremolite		

Lab/Cor, Inc.
7619 6th Ave Nw
Seattle, WA 98117

Phone: (206) 781-0155
Fax: (206) 789-8424
http://www.labcor.net

A Professional Service Corporation in the Northwest

ISO 10312, Direct Count Categories

Job Number: 070434 **SEA** **Report Number:** 070434R06
Client: Idaho National Laboratory **Date Received:** 4/23/2007
Project Name: RARE

Lab/Cor Sample No.: S38
Client Sample No.: FB-1-R6
Description:
Filter Fraction: 1 **Aliquot Dilution:** 0
Residual Ash Vol: **Final Dilution:** 0

Volume (L): 0
Lab Filter Area (mm2): 385
Grid Openings Analyzed: 10
Average Grid Opening Area: 0.009
Area Analyzed (mm2): 0.09
Analytical Sens. (struc/cc): 0
Dectection Limit. (struc/cc): 0

Structure Type	Filter Density (s/mm2)	Concen-tration (struc/cc)	95% Confidence Interval (struc/cc)	Structure Count[1] Prim/Total
Asbestos Structures >5um and 3:1	177.8	Not Applicable	Not Applicable	16

Gr	No.	Loc.	ID	Prim	Tot	Class	Len	Wid	Asp	Analyte	Elements	Comment
G1	5	D8	AX	14	14	F	26	0.5	52	Tremolite		
G1	2	F3	AX	5		MD 1-0	5.1	1.5	3.4	Tremolite		
G1	3	I5	AX	6	6	F	24	0.9	26.7	Tremolite		
G1	3	I5	AX	8	8	F	6.2	0.5	12.4	Tremolite		
G1	4	G10	AX	9	9	F	13	0.55	23.6	Tremolite		
G1	4	G10	AX	11	11	F	9.85	1.3	7.6	Tremolite		
G1	2	F3	AX	3	3	F	9.3	0.7	13.3	Tremolite		
G2	9	G7	AX	22	22	F	5.15	0.6	8.6	Tremolite		
G2	10	D7	AX	25	25	F	24	0.4	60	Tremolite		
G2	9	G7	AX	24	24	F	8	0.85	9.4	Tremolite		
G2	9	G7	AX	23	23	F	12.5	0.4	31.2	Tremolite		
G2	8	I4	AX	21	21	F	9	0.7	12.9	Tremolite		
G2	8	I4	AX	20	20	F	5.65	0.75	7.5	Tremolite		
G2	8	I4	AX	19		MD 1-0	10	5	2	Tremolite		
G2	6	A4	AX	15	15	F	10.35	0.7	14.8	Tremolite		
G2	7	D3	AX	17	17	F	7.5	0.8	9.4	Tremolite		

Asbestos Fibers and Bundles > 5um and 3:1		Not Applicable	Not Applicable	14

Gr	No.	Loc.	ID	Prim	Tot	Class	Len	Wid	Asp	Analyte	Elements	Comment
G1	2	F3	AX	3	3	F	9.3	0.7	13.3	Tremolite		
G1	3	I5	AX	6	6	F	24	0.9	26.7	Tremolite		
G1	3	I5	AX	8	8	F	6.2	0.5	12.4	Tremolite		
G1	4	G10	AX	9	9	F	13	0.55	23.6	Tremolite		
G1	4	G10	AX	11	11	F	9.85	1.3	7.6	Tremolite		
G1	5	D8	AX	14	14	F	26	0.5	52	Tremolite		
G2	9	G7	AX	22	22	F	5.15	0.6	8.6	Tremolite		
G2	10	D7	AX	25	25	F	24	0.4	60	Tremolite		
G2	9	G7	AX	24	24	F	8	0.85	9.4	Tremolite		
G2	9	G7	AX	23	23	F	12.5	0.4	31.2	Tremolite		
G2	8	I4	AX	20	20	F	5.65	0.75	7.5	Tremolite		
G2	7	D3	AX	17	17	F	7.5	0.8	9.4	Tremolite		
G2	6	A4	AX	15	15	F	10.35	0.7	14.8	Tremolite		
G2	8	I4	AX	21	21	F	9	0.7	12.9	Tremolite		

Lab/Cor, Inc.
7619 6th Ave Nw
Seattle, WA 98117

Phone: (206) 781-0155
Fax: (206) 789-8424
http://www.labcor.net

A Professional Service Corporation in the Northwest

ISO 10312, Direct Count Categories

Job Number: 070434 **SEA** **Report Number:** 070434R06
Client: Idaho National Laboratory **Date Received:** 4/23/2007
Project Name: RARE

Lab/Cor Sample No.: S39
Client Sample No.: FB-1-R7
Description:
Filter Fraction: 1 **Aliquot Dilution:** 0
Residual Ash Vol: **Final Dilution:** 0

Volume (L): 0
Lab Filter Area (mm2): 385
Grid Openings Analyzed: 10
Average Grid Opening Area: 0.009
Area Analyzed (mm2): 0.09
Analytical Sens. (struc/cc): 0
Dectection Limit. (struc/cc): 0

Structure Type	Filter Density (s/mm2)	Concen-tration (struc/cc)	95% Confidence Interval (struc/cc)	Structure Count[1] Prim/Total
PCM Equivalent Fibers-ISO		Not Applicable	Not Applicable	15

Gr	No.	Loc.	ID	Prim	Tot	Class	Len	Wid	Asp	Analyte	Elements	Comment
G1	4	G7	AX	9	10	F	10.15	1.2	8.5	Tremolite		
G1	1	C2	AX	2	2	F	12	1.35	8.9	Tremolite		
G1	4	G7	AX	10	11	F	5.35	0.9	5.9	Tremolite		
G1	3	I3	AX		8	MF	18.5	0.85	21.8	Tremolite		
G1	3	I3	AX		6	MF	5.2	0.38	13.7	Tremolite		
G1	2	F1	AX	5	5	F	9	1.25	7.2	Tremolite		
G1	2	F1	AX	4	4	F	5.6	0.4	14	Tremolite		
G2	7	C1	AX	14	15	F	11	0.5	22	Tremolite		
G2	7	C1	AX	16	17	F	8.58	0.88	9.8	Tremolite		
G2	8	G2	AX	18	19	F	6.2	1.75	3.5	Tremolite		
G2	8	G2	AX	19	20	F	6.2	1.75	3.5	Tremolite		
G2	8	G2	AX	20	21	F	7.7	0.8	9.6	Tremolite		
G2	10	F10	AX	25	26	F	8.2	2	4.1	Tremolite		
G2	10	F10	AX	26	27	F	7.5	0.65	11.5	Tremolite		
G2	6	A4	AX	11	12	F	14.5	0.78	18.6	Tremolite		

PCM Equivalent Structures-ISO	144.4	Not Applicable	Not Applicable	13	

Gr	No.	Loc.	ID	Prim	Tot	Class	Len	Wid	Asp	Analyte	Elements	Comment
G1	2	F1	AX	4	4	F	5.6	0.4	14	Tremolite		
G1	4	G7	AX	10	11	F	5.35	0.9	5.9	Tremolite		
G1	1	C2	AX	2	2	F	12	1.35	8.9	Tremolite		
G1	2	F1	AX	5	5	F	9	1.25	7.2	Tremolite		
G1	4	G7	AX	9	10	F	10.15	1.2	8.5	Tremolite		
G2	10	F10	AX	26	27	F	7.5	0.65	11.5	Tremolite		
G2	6	A4	AX	11	12	F	14.5	0.78	18.6	Tremolite		
G2	7	C1	AX	14	15	F	11	0.5	22	Tremolite		
G2	7	C1	AX	16	17	F	8.58	0.88	9.8	Tremolite		
G2	8	G2	AX	18	19	F	6.2	1.75	3.5	Tremolite		
G2	8	G2	AX	19	20	F	6.2	1.75	3.5	Tremolite		
G2	8	G2	AX	20	21	F	7.7	0.8	9.6	Tremolite		
G2	10	F10	AX	25	26	F	8.2	2	4.1	Tremolite		

PCM Equivalent Fibers-NIOSH		Not Applicable	Not Applicable		15

Gr	No.	Loc.	ID	Prim	Tot	Class	Len	Wid	Asp	Analyte	Elements	Comment
G1	4	G7	AX	10	11	F	5.35	0.9	5.9	Tremolite		
G1	4	G7	AX	9	10	F	10.15	1.2	8.5	Tremolite		

Lab/Cor, Inc.
7619 6th Ave Nw
Seattle, WA 98117

Phone: (206) 781-0155
Fax: (206) 789-8424
http://www.labcor.net

A Professional Service Corporation in the Northwest

ISO 10312, Direct Count Categories

Job Number: 070434 **SEA** **Report Number:** 070434R06
Client: Idaho National Laboratory **Date Received:** 4/23/2007
Project Name: RARE

Lab/Cor Sample No.: S39
Client Sample No.: FB-1-R7
Description:
Filter Fraction: 1 **Aliquot Dilution:** 0
Residual Ash Vol: **Final Dilution:** 0

Volume (L): 0
Lab Filter Area (mm2): 385
Grid Openings Analyzed: 10
Average Grid Opening Area: 0.009
Area Analyzed (mm2): 0.09
Analytical Sens. (struc/cc): 0
Dectection Limit. (struc/cc): 0

Structure Type							Filter Density (s/mm2)	Concen-tration (struc/cc)		95% Confidence Interval (struc/cc)		Structure Count[1] Prim/Total	
PCM Equivalent Fibers-NIOSH								Not Applicable		Not Applicable			15
Gr	**No.**	**Loc.**	**ID**	**Prim**	**Tot**	**Class**	**Len**	**Wid**	**Asp**	**Analyte**	**Elements**	**Comment**	
G1	3	I3	AX		8	MF	18.5	0.85	21.8	Tremolite			
G1	3	I3	AX		6	MF	5.2	0.38	13.7	Tremolite			
G1	2	F1	AX	5	5	F	9	1.25	7.2	Tremolite			
G1	1	C2	AX	2	2	F	12	1.35	8.9	Tremolite			
G1	2	F1	AX	4	4	F	5.6	0.4	14	Tremolite			
G2	7	C1	AX	16	17	F	8.58	0.88	9.8	Tremolite			
G2	10	F10	AX	25	26	F	8.2	2	4.1	Tremolite			
G2	8	G2	AX	20	21	F	7.7	0.8	9.6	Tremolite			
G2	10	F10	AX	26	27	F	7.5	0.65	11.5	Tremolite			
G2	7	C1	AX	14	15	F	11	0.5	22	Tremolite			
G2	6	A4	AX	11	12	F	14.5	0.78	18.6	Tremolite			
G2	8	G2	AX	19	20	F	6.2	1.75	3.5	Tremolite			
G2	8	G2	AX	18	19	F	6.2	1.75	3.5	Tremolite			
PCM Equivalent Structures-NIOSH							144.4	Not Applicable		Not Applicable		13	
Gr	**No.**	**Loc.**	**ID**	**Prim**	**Tot**	**Class**	**Len**	**Wid**	**Asp**	**Analyte**	**Elements**	**Comment**	
G1	1	C2	AX	2	2	F	12	1.35	8.9	Tremolite			
G1	2	F1	AX	4	4	F	5.6	0.4	14	Tremolite			
G1	2	F1	AX	5	5	F	9	1.25	7.2	Tremolite			
G1	4	G7	AX	9	10	F	10.15	1.2	8.5	Tremolite			
G1	4	G7	AX	10	11	F	5.35	0.9	5.9	Tremolite			
G2	6	A4	AX	11	12	F	14.5	0.78	18.6	Tremolite			
G2	10	F10	AX	26	27	F	7.5	0.65	11.5	Tremolite			
G2	10	F10	AX	25	26	F	8.2	2	4.1	Tremolite			
G2	8	G2	AX	20	21	F	7.7	0.8	9.6	Tremolite			
G2	8	G2	AX	19	20	F	6.2	1.75	3.5	Tremolite			
G2	8	G2	AX	18	19	F	6.2	1.75	3.5	Tremolite			
G2	7	C1	AX	14	15	F	11	0.5	22	Tremolite			
G2	7	C1	AX	16	17	F	8.58	0.88	9.8	Tremolite			
Asbestos Structures >5um and 3:1							144.4	Not Applicable		Not Applicable		13	
Gr	**No.**	**Loc.**	**ID**	**Prim**	**Tot**	**Class**	**Len**	**Wid**	**Asp**	**Analyte**	**Elements**	**Comment**	
G1	3	I3	AX	6		MD 2-1	15	12	1.2	Tremolite			
G1	4	G7	AX	10	11	F	5.35	0.9	5.9	Tremolite			
G1	3	I3	AX	7		MD 1-1	20	10	2	Tremolite			
G1	2	F1	AX	4	4	F	5.6	0.4	14	Tremolite			

Lab/Cor, Inc.
7619 6th Ave Nw
Seattle, WA 98117

Phone: (206) 781-0155
Fax: (206) 789-8424
http://www.labcor.net

A Professional Service Corporation in the Northwest

ISO 10312, Direct Count Categories

Job Number: 070434 **SEA** **Report Number:** 070434R06
Client: Idaho National Laboratory **Date Received:** 4/23/2007
Project Name: RARE

Lab/Cor Sample No.: S39
Client Sample No.: FB-1-R7
Description:
Filter Fraction: 1
Residual Ash Vol:
Aliquot Dilution: 0
Final Dilution: 0
Volume (L): 0
Lab Filter Area (mm2): 385
Grid Openings Analyzed: 10
Average Grid Opening Area: 0.009
Area Analyzed (mm2): 0.09
Analytical Sens. (struc/cc): 0
Dectection Limit. (struc/cc): 0

Structure Type	Filter Density (s/mm2)	Concen-tration (struc/cc)	95% Confidence Interval (struc/cc)	Structure Count[1] Prim/Total
Asbestos Structures >5um and 3:1	144.4	Not Applicable	Not Applicable	13

Gr	No.	Loc.	ID	Prim	Tot	Class	Len	Wid	Asp	Analyte	Elements	Comment
G1	1	C2	AX	2	2	F	12	1.35	8.9	Tremolite		
G1	2	F1	AX	5	5	F	9	1.25	7.2	Tremolite		
G1	4	G7	AX	9	10	F	10.15	1.2	8.5	Tremolite		
G2	6	A4	AX	11	12	F	14.5	0.78	18.6	Tremolite		
G2	6	A4	AX	13		MD 1-0	7	4	1.8	Tremolite		
G2	7	C1	AX	14	15	F	11	0.5	22	Tremolite		
G2	7	C1	AX	16	17	F	8.58	0.88	9.8	Tremolite		
G2	8	G2	AX	20	21	F	7.7	0.8	9.6	Tremolite		
G2	10	F10	AX	26	27	F	7.5	0.65	11.5	Tremolite		

Asbestos Fibers and Bundles > 5um and 3:1		Not Applicable	Not Applicable	12

Gr	No.	Loc.	ID	Prim	Tot	Class	Len	Wid	Asp	Analyte	Elements	Comment
G1	1	C2	AX	2	2	F	12	1.35	8.9	Tremolite		
G1	4	G7	AX	10	11	F	5.35	0.9	5.9	Tremolite		
G1	4	G7	AX	9	10	F	10.15	1.2	8.5	Tremolite		
G1	3	I3	AX		8	MF	18.5	0.85	21.8	Tremolite		
G1	3	I3	AX		6	MF	5.2	0.38	13.7	Tremolite		
G1	2	F1	AX	4	4	F	5.6	0.4	14	Tremolite		
G1	2	F1	AX	5	5	F	9	1.25	7.2	Tremolite		
G2	10	F10	AX	26	27	F	7.5	0.65	11.5	Tremolite		
G2	6	A4	AX	11	12	F	14.5	0.78	18.6	Tremolite		
G2	7	C1	AX	14	15	F	11	0.5	22	Tremolite		
G2	7	C1	AX	16	17	F	8.58	0.88	9.8	Tremolite		
G2	8	G2	AX	20	21	F	7.7	0.8	9.6	Tremolite		

Lab/Cor, Inc.
7619 6th Ave Nw
Seattle, WA 98117

Phone: (206) 781-0155
Fax: (206) 789-8424
http://www.labcor.net

A Professional Service Corporation in the Northwest

ISO 10312, Direct Count Categories

Job Number: 070434 **SEA**
Report Number: 070434R06
Client: Idaho National Laboratory
Date Received: 4/23/2007
Project Name: RARE

Reviewed by:

Appendix F

TEM DATA for Berman Elutriator

Lab/Cor, Inc.
7619 6th Ave Nw
Seattle, WA 98117

Analysis Report Cover

Final Report

A Professional Service Corporation in the Northwest

Phone: (206) 781-0155
Fax: (206) 789-8424
http://www.labcor.net

Job Number: 070451 **SEA**

Report Number: 070451R02

Client: Idaho National Laboratory

Report Date: 7/13/2007

Address: PO Box 1625 MS 2107
Idaho Falls, ID 83415-2107

Project Name: RARE

Project Num:

PO Number:

Sub Project:

Enclosed please find results for samples submitted to our laboratory. A list of samples and analyses follows:

Lab/Cor Sample #	Client Sample # and Description	Analysis	Analysis Notes	Date Received:
070451 - S1	BR-0-R1 -	Soil - Elutriation Method		4/23/2007
070451 - S2	BR-1-R1 -	Soil - Elutriation Method		4/23/2007
070451 - S3	BR-2-R1 -	Soil - Elutriation Method		4/23/2007
070451 - S4	BR-3-R1 -	Soil - Elutriation Method		4/23/2007
070451 - S5	BR-4-R1 -	Soil - Elutriation Method		4/23/2007

Soil - Elutriation Method - EPA 540-2-90-005, Modified May 23, 2000

Preparation and analysis of the above samples was conducted in accordance with the EPA Superfund method EPA 540 2-90 005a with modifications dated May 23, 2000 using ISO method 10312 (Direct) counting rules for the identification of asbestos. In an effort to create a sample with acceptable releasability, the samples submitted to the lab were combined with blank in-house soil samples that were previously tested for asbestos using the elutriation method. The samples were conditioned overnight in a desiccator with CaNO3 – 4H2O including all filters used in the procedure.

Approximately 40-60 grams the combined sample are loaded in the tumbler and rotated at a speed of about 30 rpm to initiate the run. Mixed cellulose ester (MCE) filters are placed at the sliding mechanism at the top of the vertical elutriator and moved in and out of the airstream at timed intervals. The filters are weighed after each timed interval. The weight values are used to monitor respirable dust release from the soil and to estimate optimal loading of particulate onto polycarbonate (PC) filters that are collected through an isokinetic port on top of the vertical elutriator. After collection of particulate during the timed intervals, the PC filters were weighed to 7 places, placed in a nonconductive box, then placed in a high vacuum carbon evaporator and carbon-coated to retain particulates in their original locations on the filter.

Carbon-coated filters were dissolved using 20% 1-2-diaminoethane with 80% 1-methyl-2-pyrrolidone (NMP) solution followed by a rinse in reagent alcohol. Samples were placed on 200 mesh copper or gold grids for examination by transmission electron microscopy (TEM).

TEM analysis was performed using a transmission electron microscope equipped with an appropriate X ray analyzer. The air samples were analyzed at a screen magnification between 15,000 - 20,000x for asbestos structures greater than 0.5 micrometer lengths. An accelerating voltage of 100 KV was applied.

Structures detected by this method are classified using the ISO fiber classification levels. The minimum acceptance level for Chrysotile is CMQ, and the minimum acceptance level for Amphiboles is ADQ.

Disclaimer

The results reported relate only to the samples tested or analyzed. Interpretation of these results is the sole responsibility of the client.

If further clarification of these results is needed, please call us. Thank you for allowing the staff at Lab/Cor, Inc. the opportunity to provide you with the analytical services.

Sincerely,

John Harris, M.P.H.
Laboratory Director

Lab/Cor, Inc.
7619 6th Ave Nw
Seattle, WA 98117

Final Report

Phone: (206) 781-0155
Fax: (206) 789-8424
http://www.labcor.net

A Professional Service Corporation in the Northwest

Soil - Elutriation Method Summary Data

Job Number: 070451 **SEA**
Client: Idaho National Laboratory
Project Name: RARE

Report Number: 070451R02
Date Received: 4/23/2007

Lab/Cor Sample No.: S1
Client Sample No.: BR-0-R1
Description:

Analyst(s)	Analysis Date
KM	6/20/2007
KM	6/21/2007

Mass (gPM10) : 0.0001012
Lab Filter Area (mm2) : 385
Grid Openings Analyzed : 89
Average Grid Opening Area (mm2) : 0.00945
Area Analyzed (mm2) : 0.84105
Analytical Sens. (struc/gPM10) : 4.52E+06
Detection Limit. (struc/gPM10) : 1.35E+07

Structure Type	Filter Density (s/mm2)	Concen-tration* (struc/gPM10)	95% Confidence Interval (struc/gPM10)	Structure Count[1] Prim/Total	
Primary Asbestos Structures	0	< 4.52E+06	0.00E+00 - 3.69E+00 - Poisson	0	
Total Asbestos Structures	0	< 4.52E+06	0.00E+00 - 3.69E+00 - Poisson		0
PCM Equivalent Structures-ISO	0	< 4.52E+06	0.00E+00 - 3.69E+00 - Poisson	0	
Total Chrysotile Structures, >=0.5 - <=5.0, and 3:1	0	< 4.52E+06	0.00E+00 - 3.69E+00 - Poisson		0
Total Chrysotile Structures, > 5 - <=10, and 3:1	0	< 4.52E+06	0.00E+00 - 3.69E+00 - Poisson		0
Total Chrysotile Structures, > 10 and 3:1	0	< 4.52E+06	0.00E+00 - 3.69E+00 - Poisson		0
Total Amphibole Structures,>=0.5 - <=5.0, and 3:1	0	< 4.52E+06	0.00E+00 - 3.69E+00 - Poisson		0
Total Amphibole Structures, >5.0 - <=10, and 3:1	0	< 4.52E+06	0.00E+00 - 3.69E+00 - Poisson		0
Total Amphibole Structures, > 10, and 3:1	0	< 4.52E+06	0.00E+00 - 3.69E+00 - Poisson		0
Primary Chrysotile Structures >5.0µm	0	< 4.52E+06	0.00E+00 - 3.69E+00 - Poisson	0	
Primary Chrysotile Structures >=0.5 - <=5.0µm	0	< 4.52E+06	0.00E+00 - 3.69E+00 - Poisson	0	
Primary Amphibole Structures >5.0µm	0	< 4.52E+06	0.00E+00 - 3.69E+00 - Poisson	0	
Primary Amphibole Structures >=0.5 - <=5.0µm	0	< 4.52E+06	0.00E+00 - 3.69E+00 - Poisson	0	

Lab/Cor, Inc.
7619 6th Ave Nw
Seattle, WA 98117

Final Report

Phone: (206) 781-0155
Fax: (206) 789-8424
http://www.labcor.net

A Professional Service Corporation in the Northwest

Soil - Elutriation Method Summary Data

Job Number: 070451 **SEA**
Client: Idaho National Laboratory
Project Name: RARE

Report Number: 070451R02
Date Received: 4/23/2007

Lab/Cor Sample No.: S2
Client Sample No.: BR-1-R1
Description:

Analyst(s)	Analysis Date
KM	6/28/2007

Mass (gPM10) : 0.0001206
Lab Filter Area (mm2) : 385
Grid Openings Analyzed : 74
Average Grid Opening Area (mm2) : 0.00945
Area Analyzed (mm2) : 0.6993
Analytical Sens. (struc/gPM10) : 4.57E+06
Detection Limit. (struc/gPM10) : 1.36E+07

Structure Type	Filter Density (s/mm2)	Concen-tration* (struc/gPM10)	95% Confidence Interval (struc/gPM10)	Structure Count[1] Prim	Total
Primary Asbestos Structures	8.6	2.74E+07	1.01E+07 - 5.96E+07 - Poisson	6	
Total Asbestos Structures	8.6	2.74E+07	1.01E+07 - 5.96E+07 - Poisson		6
PCM Equivalent Structures-ISO	4.3	1.37E+07	2.83E+06 - 4.00E+07 - Poisson	3	
Total Chrysotile Structures, >=0.5 - <=5.0, and 3:1	0	< 4.57E+06	0.00E+00 - 3.69E+00 - Poisson		0
Total Chrysotile Structures, > 5 - <=10, and 3:1	0	< 4.57E+06	0.00E+00 - 3.69E+00 - Poisson		0
Total Chrysotile Structures, > 10 and 3:1	0	< 4.57E+06	0.00E+00 - 3.69E+00 - Poisson		0
Total Amphibole Structures,>=0.5 - <=5.0, and 3:1	2.9	9.13E+06	1.10E+06 - 3.30E+07 - Poisson		2
Total Amphibole Structures, >5.0 - <=10, and 3:1	1.4	4.57E+06	1.14E+05 - 2.54E+07 - Poisson		1
Total Amphibole Structures, > 10, and 3:1	4.3	1.37E+07	2.83E+06 - 4.00E+07 - Poisson		3
Primary Chrysotile Structures >5.0µm	0	< 4.57E+06	0.00E+00 - 3.69E+00 - Poisson	0	
Primary Chrysotile Structures >=0.5 - <=5.0µm	0	< 4.57E+06	0.00E+00 - 3.69E+00 - Poisson	0	
Primary Amphibole Structures >5.0µm	7.2	2.28E+07	7.41E+06 - 5.33E+07 - Poisson	5	
Primary Amphibole Structures >=0.5 - <=5.0µm	1.4	4.57E+06	1.14E+05 - 2.54E+07 - Poisson	1	

Lab/Cor, Inc.
7619 6th Ave Nw
Seattle, WA 98117

Final Report

Phone: (206) 781-0155
Fax: (206) 789-8424
http://www.labcor.net

A Professional Service Corporation in the Northwest

Soil - Elutriation Method Summary Data

Job Number: 070451 **SEA**
Client: Idaho National Laboratory
Project Name: RARE

Report Number: 070451R02
Date Received: 4/23/2007

Lab/Cor Sample No.: S3
Client Sample No.: BR-2-R1
Description:

Analyst(s)	Analysis Date
KM	6/28/2007

Mass (gPM10) : 0.0001270
Lab Filter Area (mm2) : 385
Grid Openings Analyzed : 70
Average Grid Opening Area (mm2) : 0.00945
Area Analyzed (mm2) : 0.6615
Analytical Sens. (struc/gPM10) : 4.58E+06
Detection Limit. (struc/gPM10) : 1.37E+07

Structure Type	Filter Density (s/mm2)	Concen-tration* (struc/gPM10)	95% Confidence Interval (struc/gPM10)	Structure Count[1] Prim	Total
Primary Asbestos Structures	0	< 4.58E+06	0.00E+00 - 3.69E+00 - Poisson	0	
Total Asbestos Structures	0	< 4.58E+06	0.00E+00 - 3.69E+00 - Poisson		0
PCM Equivalent Structures-ISO	0	< 4.58E+06	0.00E+00 - 3.69E+00 - Poisson	0	
Total Chrysotile Structures, >=0.5 - <=5.0, and 3:1	0	< 4.58E+06	0.00E+00 - 3.69E+00 - Poisson		0
Total Chrysotile Structures, > 5 - <=10, and 3:1	0	< 4.58E+06	0.00E+00 - 3.69E+00 - Poisson		0
Total Chrysotile Structures, > 10 and 3:1	0	< 4.58E+06	0.00E+00 - 3.69E+00 - Poisson		0
Total Amphibole Structures,>=0.5 - <=5.0, and 3:1	0	< 4.58E+06	0.00E+00 - 3.69E+00 - Poisson		0
Total Amphibole Structures, >5.0 - <=10, and 3:1	0	< 4.58E+06	0.00E+00 - 3.69E+00 - Poisson		0
Total Amphibole Structures, > 10, and 3:1	0	< 4.58E+06	0.00E+00 - 3.69E+00 - Poisson		0
Primary Chrysotile Structures >5.0µm	0	< 4.58E+06	0.00E+00 - 3.69E+00 - Poisson	0	
Primary Chrysotile Structures >=0.5 - <=5.0µm	0	< 4.58E+06	0.00E+00 - 3.69E+00 - Poisson	0	
Primary Amphibole Structures >5.0µm	0	< 4.58E+06	0.00E+00 - 3.69E+00 - Poisson	0	
Primary Amphibole Structures >=0.5 - <=5.0µm	0	< 4.58E+06	0.00E+00 - 3.69E+00 - Poisson	0	

Lab/Cor, Inc.
7619 6th Ave Nw
Seattle, WA 98117

Final Report

Phone: (206) 781-0155
Fax: (206) 789-8424
http://www.labcor.net

A Professional Service Corporation in the Northwest

Soil - Elutriation Method Summary Data

Job Number: 070451 **SEA**
Client: Idaho National Laboratory
Project Name: RARE

Report Number: 070451R02
Date Received: 4/23/2007

Lab/Cor Sample No.: S4
Client Sample No.: BR-3-R1
Description:

Analyst(s)	Analysis Date
KM	6/29/2007

Mass (gPM10) : 0.0001257
Lab Filter Area (mm2) : 385
Grid Openings Analyzed : 71
Average Grid Opening Area (mm2) : 0.00945
Area Analyzed (mm2) : 0.67095
Analytical Sens. (struc/gPM10) : 4.56E+06
Detection Limit. (struc/gPM10) : 1.36E+07

Structure Type	Filter Density (s/mm2)	Concen-tration* (struc/gPM10)	95% Confidence Interval (struc/gPM10)	Structure Count[1] Prim	Total
Primary Asbestos Structures	0	< 4.56E+06	0.00E+00 - 3.69E+00 - Poisson	0	
Total Asbestos Structures	0	< 4.56E+06	0.00E+00 - 3.69E+00 - Poisson		0
PCM Equivalent Structures-ISO	0	< 4.56E+06	0.00E+00 - 3.69E+00 - Poisson	0	
Total Chrysotile Structures, >=0.5 - <=5.0, and 3:1	0	< 4.56E+06	0.00E+00 - 3.69E+00 - Poisson		0
Total Chrysotile Structures, > 5 - <=10, and 3:1	0	< 4.56E+06	0.00E+00 - 3.69E+00 - Poisson		0
Total Chrysotile Structures, > 10 and 3:1	0	< 4.56E+06	0.00E+00 - 3.69E+00 - Poisson		0
Total Amphibole Structures,>=0.5 - <=5.0, and 3:1	0	< 4.56E+06	0.00E+00 - 3.69E+00 - Poisson		0
Total Amphibole Structures, >5.0 - <=10, and 3:1	0	< 4.56E+06	0.00E+00 - 3.69E+00 - Poisson		0
Total Amphibole Structures, > 10, and 3:1	0	< 4.56E+06	0.00E+00 - 3.69E+00 - Poisson		0
Primary Chrysotile Structures >5.0µm	0	< 4.56E+06	0.00E+00 - 3.69E+00 - Poisson	0	
Primary Chrysotile Structures >=0.5 - <=5.0µm	0	< 4.56E+06	0.00E+00 - 3.69E+00 - Poisson	0	
Primary Amphibole Structures >5.0µm	0	< 4.56E+06	0.00E+00 - 3.69E+00 - Poisson	0	
Primary Amphibole Structures >=0.5 - <=5.0µm	0	< 4.56E+06	0.00E+00 - 3.69E+00 - Poisson	0	

Lab/Cor, Inc.
7619 6th Ave Nw
Seattle, WA 98117

Final Report

Phone: (206) 781-0155
Fax: (206) 789-8424
http://www.labcor.net

A Professional Service Corporation in the Northwest

Soil - Elutriation Method Summary Data

Job Number: 070451 **SEA**
Client: Idaho National Laboratory
Project Name: RARE

Report Number: 070451R02
Date Received: 4/23/2007

Lab/Cor Sample No.: S5
Client Sample No.: BR-4-R1
Description:

Analyst(s)	Analysis Date
KM	7/2/2007

Mass (gPM10) : 0.0001203
Lab Filter Area (mm2) : 385
Grid Openings Analyzed : 74
Average Grid Opening Area (mm2) : 0.00945
Area Analyzed (mm2) : 0.6993
Analytical Sens. (struc/gPM10) : 4.58E+06
Detection Limit. (struc/gPM10) : 1.37E+07

Structure Type	Filter Density (s/mm2)	Concen-tration* (struc/gPM10)	95% Confidence Interval (struc/gPM10)	Structure Count[1] Prim/Total	
Primary Asbestos Structures	0	< 4.58E+06	0.00E+00 - 3.69E+00 - Poisson	0	
Total Asbestos Structures	0	< 4.58E+06	0.00E+00 - 3.69E+00 - Poisson		0
PCM Equivalent Structures-ISO	0	< 4.58E+06	0.00E+00 - 3.69E+00 - Poisson	0	
Total Chrysotile Structures, >=0.5 - <=5.0, and 3:1	0	< 4.58E+06	0.00E+00 - 3.69E+00 - Poisson		0
Total Chrysotile Structures, > 5 - <=10, and 3:1	0	< 4.58E+06	0.00E+00 - 3.69E+00 - Poisson		0
Total Chrysotile Structures, > 10 and 3:1	0	< 4.58E+06	0.00E+00 - 3.69E+00 - Poisson		0
Total Amphibole Structures,>=0.5 - <=5.0, and 3:1	0	< 4.58E+06	0.00E+00 - 3.69E+00 - Poisson		0
Total Amphibole Structures, >5.0 - <=10, and 3:1	0	< 4.58E+06	0.00E+00 - 3.69E+00 - Poisson		0
Total Amphibole Structures, > 10, and 3:1	0	< 4.58E+06	0.00E+00 - 3.69E+00 - Poisson		0
Primary Chrysotile Structures >5.0µm	0	< 4.58E+06	0.00E+00 - 3.69E+00 - Poisson	0	
Primary Chrysotile Structures >=0.5 - <=5.0µm	0	< 4.58E+06	0.00E+00 - 3.69E+00 - Poisson	0	
Primary Amphibole Structures >5.0µm	0	< 4.58E+06	0.00E+00 - 3.69E+00 - Poisson	0	
Primary Amphibole Structures >=0.5 - <=5.0µm	0	< 4.58E+06	0.00E+00 - 3.69E+00 - Poisson	0	

Lab/Cor, Inc.
7619 6th Ave Nw
Seattle, WA 98117

Final Report

Phone: (206) 781-0155
Fax: (206) 789-8424
http://www.labcor.net

A Professional Service Corporation in the Northwest

Soil - Elutriation Method Summary Data

Job Number: 070451 **SEA**
Client: Idaho National Laboratory
Project Name: RARE

Report Number: 070451R02
Date Received: 4/23/2007

Reviewed by:

John Harris, M.P.H.
Laboratory Director

Lab/Cor, Inc.
7619 6th Ave Nw
Seattle, WA 98117

Final Report

Phone: (206) 781-0155
Fax: (206) 789-8424
http://www.labcor.net

A Professional Service Corporation in the Northwest

Soil - Elutriation Method Raw Data

Job Number: 070451 **SEA** **EPA 540-2-90-005, Modified May 23, 2000** **Report Number:** 070451R02

Client: Idaho National Laboratory **Date Received:** 4/23/2007

Project Name: RARE

Client Sample No: **BR-0-R1** Lab/Cor Sample No: **S1**

Client Description: **Date Sampled:**

Gr	No.	Loc.	ID	Prim	Tot	Class	Len	Wid	Asp	Analyte	Elements	Comment	Count Categories
G1	1	A2				NSD							
G1	2	C2				NSD							
G1	3	E2				NSD							
G1	4	H2				NSD							
G1	5	I2				NSD							
G1	6	J4				NSD							
G1	7	H4				NSD							
G1	8	F4				NSD							
G1	9	A4				NSD							
G1	10	B5				NSD							
G1	11	A7				NSD							
G1	12	C7				NSD							
G1	13	E7				NSD							
G1	14	H7				NSD							
G1	15	J7				NSD							
G1	16	A8				NSD							
G1	17	B8				NSD							
G1	18	D8				NSD							
G1	19	E8				NSD							
G1	20	H8				NSD							
G1	21	I8				NSD							
G1	22	J8				NSD							
G1	23	J9				NSD							
G1	24	H9				NSD							
G1	25	C9				NSD							
G1	26	B9				NSD							
G1	27	A9				NSD							
G1	28	G5				NSD							
G1	29	I5				NSD							
G1	30	J6				NSD							
G2	31	A2				NSD							
G2	32	C2				NSD							
G2	33	E2				NSD							
G2	34	G2				NSD							

Count Categories

PAmS_0.5-5	Primary Amphibole Structures >=0.5 - <=5.0µm	PAmS_5	Primary Amphibole Structures >5.0µm
PAS	Primary Asbestos Structures	PCMES-ISO	PCM Equivalent Structures-ISO
PCS_>5	Primary Chrysotile Structures >5.0µm	PCS_0.5-5	Primary Chrysotile Structures >=0.5 - <=5.0µm
TAmpSt, >10	Total Amphibole Structures, > 10, and 3:1	TAmpSt,0.5-5	Total Amphibole Structures,>=0.5 - <=5.0, and 3:1
TAmpSt,5-10	Total Amphibole Structures, >5.0 - <=10, and 3:1	TAS	Total Asbestos Structures

Lab/Cor, Inc.
7619 6th Ave Nw
Seattle, WA 98117

Final Report

Phone: (206) 781-0155
Fax: (206) 789-8424
http://www.labcor.net

A Professional Service Corporation in the Northwest

Soil - Elutriation Method Raw Data

Job Number: 070451 **SEA** **EPA 540-2-90-005, Modified May 23, 2000** **Report Number:** 070451R02

Client: Idaho National Laboratory **Date Received:** 4/23/2007

Project Name: RARE

Client Sample No: **BR-0-R1** Lab/Cor Sample No: **S1**

Client Description: **Date Sampled:**

Gr	No.	Loc.	ID	Prim	Tot	Class	Len	Wid	Asp	Analyte	Elements	Comment	Count Categories
G2	35	I2				NSD							
G2	36	J4				NSD							
G2	37	H4				NSD							
G2	38	F4				NSD							
G2	39	E4				NSD							
G2	40	C4				NSD							
G2	41	A4				NSD							
G2	42	B3				NSD							
G2	43	D3				NSD							
G2	44	F3				NSD							
G2	45	H3				NSD							
G2	46	J3				NSD							
G2	47	A7				NSD							
G2	48	C7				NSD							
G2	49	E7				NSD							
G2	50	G7				NSD							
G2	51	I7				NSD							
G2	52	J8				NSD							
G2	53	H8				NSD							
G2	54	F8				NSD							
G2	55	D8				NSD							
G2	56	B8				NSD							
G2	57	A9				NSD							
G2	58	C9				NSD							
G2	59	E9				NSD							
G3	60	A2				NSD							
G3	61	C2				NSD							
G3	62	E2				NSD							
G3	63	G2				NSD							
G3	64	I2				NSD							
G3	65	J3				NSD							
G3	66	H3				NSD							
G3	67	F3				NSD							
G3	68	C3				NSD							

Count Categories

PAmS_0.5-5	Primary Amphibole Structures >=0.5 - <=5.0µm	PAmS_5	Primary Amphibole Structures >5.0µm
PAS	Primary Asbestos Structures	PCMES-ISO	PCM Equivalent Structures-ISO
PCS_>5	Primary Chrysotile Structures >5.0µm	PCS_0.5-5	Primary Chrysotile Structures >=0.5 - <=5.0µm
TAmpSt, >10	Total Amphibole Structures, > 10, and 3:1	TAmpSt,0.5-5	Total Amphibole Structures,>=0.5 - <=5.0, and 3:1
TAmpSt,5-10	Total Amphibole Structures, >5.0 - <=10, and 3:1	TAS	Total Asbestos Structures

Lab/Cor, Inc.
7619 6th Ave Nw
Seattle, WA 98117

Final Report

Phone: (206) 781-0155
Fax: (206) 789-8424
http://www.labcor.net

A Professional Service Corporation in the Northwest

Soil - Elutriation Method Raw Data

Job Number: 070451 **SEA** **EPA 540-2-90-005, Modified May 23, 2000** **Report Number:** 070451R02

Client: Idaho National Laboratory **Date Received:** 4/23/2007

Project Name: RARE

Client Sample No: **BR-0-R1** Lab/Cor Sample No: **S1**

Client Description: **Date Sampled:**

Gr	No.	Loc.	ID	Prim	Tot	Class	Len	Wid	Asp	Analyte	Elements	Comment	Count Categories
G3	69	B3				NSD							
G3	70	A4				NSD							
G3	71	B4				NSD							
G3	72	E4				NSD							
G3	73	G4				NSD							
G3	74	I4				NSD							
G3	75	J7				NSD							
G3	76	H7				NSD							
G3	77	F7				NSD							
G3	78	D7				NSD							
G3	79	B7				NSD							
G3	80	A8				NSD							
G3	81	C8				NSD							
G3	82	E8				NSD							
G3	83	G8				NSD							
G3	84	I8				NSD							
G3	85	J9				NSD							
G3	86	H9				NSD							
G3	87	F9				NSD							
G3	88	D9				NSD							
G3	89	B9				NSD							

Count Categories

PAmS_0.5-5	Primary Amphibole Structures >=0.5 - <=5.0µm	PAmS_5	Primary Amphibole Structures >5.0µm
PAS	Primary Asbestos Structures	PCMES-ISO	PCM Equivalent Structures-ISO
PCS_>5	Primary Chrysotile Structures >5.0µm	PCS_0.5-5	Primary Chrysotile Structures >=0.5 - <=5.0µm
TAmpSt, >10	Total Amphibole Structures, > 10, and 3:1	TAmpSt,0.5-5	Total Amphibole Structures,>=0.5 - <=5.0, and 3:1
TAmpSt,5-10	Total Amphibole Structures, >5.0 - <=10, and 3:1	TAS	Total Asbestos Structures

Lab/Cor, Inc.
7619 6th Ave Nw
Seattle, WA 98117

Final Report

Phone: (206) 781-0155
Fax: (206) 789-8424
http://www.labcor.net

A Professional Service Corporation in the Northwest

Soil - Elutriation Method Raw Data

Job Number: 070451 **SEA** **EPA 540-2-90-005, Modified May 23, 2000** **Report Number:** 070451R02

Client: Idaho National Laboratory **Date Received:** 4/23/2007

Project Name: RARE

Client Sample No: **BR-1-R1** Lab/Cor Sample No: **S2**

Client Description: **Date Sampled:**

Gr	No.	Loc.	ID	Prim	Tot	Class	Len	Wid	Asp	Analyte	Elements	Comment	Count Categories
G1	1	A2				NSD							
G1	2	C2				NSD							
G1	3	E2				NSD							
G1	4	G2				NSD							
G1	5	I2				NSD							
G1	6	J3	ADQ	1	1	F	17	2.7	6.3	Tremolite	Mg, Si, Ca, Fe		PAmS_5, TAmpSt, >10, PCMES-ISO

ItemType	ItemNum	Confirmed	Comment
Brightfield	J3683 BF		
Diffraction	J3683	KM 6/28/2007	5.3A IMAGE
Spectra	J3119		

Gr	No.	Loc.	ID	Prim	Tot	Class	Len	Wid	Asp	Analyte	Elements	Comment	Count Categories
G1	7	H3	AZQ	2		MD 1-1	8.5	6.5	1.3	Tremolite	Mg, Al, Si, Ca, Fe		PAmS_5

ItemType	ItemNum	Confirmed	Comment
Brightfield	J3684 BF		
Diffraction	J3684	KM 6/28/2007	ZONE AXIS [1 1 0]
Spectra	J3120		

Gr	No.	Loc.	ID	Prim	Tot	Class	Len	Wid	Asp	Analyte	Elements	Comment	Count Categories
G1	7	H3	AZQ		2	MF	5.12	0.65	7.9	Tremolite			TAmpSt,5-10
G1	8	F3				NSD							
G1	9	D3				NSD							
G1	10	B3				NSD							
G1	11	A4				NSD							
G1	12	C4				NSD							
G1	13	E4				NSD							
G1	14	G4				NSD							
G1	15	I4	ADQ	3		MD 1-0	5	4.8	1	Tremolite	Mg, Al, Si, K, Ca, Mn, Fe		PAmS_0.5-5
G1	15	I4	ADQ		3	MF	4.5	0.4	11.2	Tremolite			TAmpSt,0.5-5
G1	16	A6				NSD							
G1	17	B6				NSD							
G1	18	D6				NSD							
G1	19	G6				NSD							
G1	20	I6				NSD							
G1	21	A7				NSD							
G1	22	C7				NSD							

Count Categories

PAmS_0.5-5	Primary Amphibole Structures >=0.5 - <=5.0µm	PAmS_5	Primary Amphibole Structures >5.0µm
PAS	Primary Asbestos Structures	PCMES-ISO	PCM Equivalent Structures-ISO
PCS_>5	Primary Chrysotile Structures >5.0µm	PCS_0.5-5	Primary Chrysotile Structures >=0.5 - <=5.0µm
TAmpSt, >10	Total Amphibole Structures, > 10, and 3:1	TAmpSt,0.5-5	Total Amphibole Structures,>=0.5 - <=5.0, and 3:1
TAmpSt,5-10	Total Amphibole Structures, >5.0 - <=10, and 3:1	TAS	Total Asbestos Structures

Lab/Cor, Inc.
7619 6th Ave Nw
Seattle, WA 98117

Final Report

Phone: (206) 781-0155
Fax: (206) 789-8424
http://www.labcor.net

A Professional Service Corporation in the Northwest

Soil - Elutriation Method Raw Data

Job Number: 070451 **SEA** **EPA 540-2-90-005, Modified May 23, 2000** **Report Number:** 070451R02

Client: Idaho National Laboratory **Date Received:** 4/23/2007

Project Name: RARE

Client Sample No: **BR-1-R1** Lab/Cor Sample No: **S2**

Client Description: **Date Sampled:**

Gr	No.	Loc.	ID	Prim	Tot	Class	Len	Wid	Asp	Analyte	Elements	Comment	Count Categories
G1	23	E7				NSD							
G1	24	G7				NSD							
G1	25	I7				NSD							
G1	26	J8				NSD							
G1	27	H8				NSD							
G1	28	F8				NSD							
G1	29	D8				NSD							
G1	30	B8				NSD							
G1	31	A9				NSD							
G1	32	C9				NSD							
G1	33	E9	ADQ	4		MD 1-0	7.85	3	2.6	Tremolite	Mg, Si, Ca, Fe		PAmS_5
G1	33	E9	ADQ		4	MF	2.85	0.75	3.8	Tremolite			TAmpSt,0.5-5
G1	34	G9				NSD							
G1	35	I9				NSD							
G1	36	H10				NSD							
G1	37	F10				NSD							
G2	38	A2				NSD							
G2	39	C2	AQ	5	5	F	11.2	1.8	6.2	Tremolite			PAmS_5, TAmpSt, >10, PCMES-ISO
G2	40	E2				NSD							
G2	41	G2				NSD							
G2	42	I2				NSD							
G2	43	J3				NSD							
G2	44	H3				NSD							
G2	45	F3				NSD							
G2	46	D3				NSD							
G2	47	B3				NSD							
G2	48	A4				NSD							
G2	49	C4				NSD							
G2	50	E4				NSD							
G2	51	G4				NSD							
G2	52	I4				NSD							
G2	53	J6				NSD							

Count Categories

PAmS_0.5-5	Primary Amphibole Structures >=0.5 - <=5.0µm	PAmS_5	Primary Amphibole Structures >5.0µm
PAS	Primary Asbestos Structures	PCMES-ISO	PCM Equivalent Structures-ISO
PCS_>5	Primary Chrysotile Structures >5.0µm	PCS_0.5-5	Primary Chrysotile Structures >=0.5 - <=5.0µm
TAmpSt, >10	Total Amphibole Structures, > 10, and 3:1	TAmpSt,0.5-5	Total Amphibole Structures,>=0.5 - <=5.0, and 3:1
TAmpSt,5-10	Total Amphibole Structures, >5.0 - <=10, and 3:1	TAS	Total Asbestos Structures

Lab/Cor, Inc.
7619 6th Ave Nw
Seattle, WA 98117

Final Report

Phone: (206) 781-0155
Fax: (206) 789-8424
http://www.labcor.net

A Professional Service Corporation in the Northwest

Soil - Elutriation Method Raw Data

Job Number: 070451 **SEA** **EPA 540-2-90-005, Modified May 23, 2000** **Report Number:** 070451R02

Client: Idaho National Laboratory **Date Received:** 4/23/2007

Project Name: RARE

Client Sample No: **BR-1-R1** Lab/Cor Sample No: **S2**

Client Description: **Date Sampled:**

Gr	No.	Loc.	ID	Prim	Tot	Class	Len	Wid	Asp	Analyte	Elements	Comment	Count Categories
G2	54	H6	AQ	6	6	F	19.5	0.4	48.8	Tremolite	Mg, Si, Ca, Fe		PAmS_5, TAmpSt, >10, PCMES-ISO
G2	55	G6				NSD							
G2	56	C6				NSD							
G2	57	A6				NSD							
G2	58	A7				NSD							
G2	59	C7				NSD							
G2	60	E7				NSD							
G2	61	G7				NSD							
G2	62	I7				NSD							
G2	63	J8				NSD							
G2	64	H8				NSD							
G2	65	F8				NSD							
G2	66	D8				NSD							
G2	67	B8				NSD							
G2	68	A9				NSD							
G2	69	C9				NSD							
G2	70	F9				NSD							
G2	71	G9				NSD							
G2	72	I9				NSD							
G2	73	H10				NSD							
G2	74	G10				NSD							

Count Categories

PAmS_0.5-5	Primary Amphibole Structures >=0.5 - <=5.0µm	PAmS_5	Primary Amphibole Structures >5.0µm
PAS	Primary Asbestos Structures	PCMES-ISO	PCM Equivalent Structures-ISO
PCS_>5	Primary Chrysotile Structures >5.0µm	PCS_0.5-5	Primary Chrysotile Structures >=0.5 - <=5.0µm
TAmpSt, >10	Total Amphibole Structures, > 10, and 3:1	TAmpSt,0.5-5	Total Amphibole Structures,>=0.5 - <=5.0, and 3:1
TAmpSt,5-10	Total Amphibole Structures, >5.0 - <=10, and 3:1	TAS	Total Asbestos Structures

Lab/Cor, Inc.
7619 6th Ave Nw
Seattle, WA 98117

Final Report

Phone: (206) 781-0155
Fax: (206) 789-8424
http://www.labcor.net

A Professional Service Corporation in the Northwest

Soil - Elutriation Method Raw Data

Job Number: 070451 **SEA** **EPA 540-2-90-005, Modified May 23, 2000** **Report Number:** 070451R02

Client: Idaho National Laboratory **Date Received:** 4/23/2007

Project Name: RARE

Client Sample No: **BR-2-R1** Lab/Cor Sample No: **S3**

Client Description: **Date Sampled:**

Gr	No.	Loc.	ID	Prim	Tot	Class	Len	Wid	Asp	Analyte	Elements	Comment	Count Categories
G1	1	A2				NSD							
G1	2	C2				NSD							
G1	3	E2				NSD							
G1	4	G2				NSD							
G1	5	I2				NSD							
G1	6	J3				NSD							
G1	7	H3				NSD							
G1	8	F3				NSD							
G1	9	D3				NSD							
G1	10	B3				NSD							
G1	11	A4				NSD							
G1	12	C4				NSD							
G1	13	E4				NSD							
G1	14	G4				NSD							
G1	15	I4				NSD							
G1	16	J6				NSD							
G1	17	H6				NSD							
G1	18	G6				NSD							
G1	19	D6				NSD							
G1	20	B6				NSD							
G1	21	A7				NSD							
G1	22	C7				NSD							
G1	23	E7				NSD							
G1	24	G7				NSD							
G1	25	I7				NSD							
G1	26	J8				NSD							
G1	27	H8				NSD							
G1	28	F8				NSD							
G1	29	D8				NSD							
G1	30	B8				NSD							
G1	31	A9				NSD							
G1	32	C9				NSD							
G1	33	E9				NSD							
G1	34	G9				NSD							

Count Categories

PAmS_0.5-5	Primary Amphibole Structures >=0.5 - <=5.0µm	PAmS_5	Primary Amphibole Structures >5.0µm
PAS	Primary Asbestos Structures	PCMES-ISO	PCM Equivalent Structures-ISO
PCS_>5	Primary Chrysotile Structures >5.0µm	PCS_0.5-5	Primary Chrysotile Structures >=0.5 - <=5.0µm
TAmpSt, >10	Total Amphibole Structures, > 10, and 3:1	TAmpSt,0.5-5	Total Amphibole Structures,>=0.5 - <=5.0, and 3:1
TAmpSt,5-10	Total Amphibole Structures, >5.0 - <=10, and 3:1	TAS	Total Asbestos Structures

Lab/Cor, Inc.
7619 6th Ave Nw
Seattle, WA 98117

Final Report

Phone: (206) 781-0155
Fax: (206) 789-8424
http://www.labcor.net

A Professional Service Corporation in the Northwest

Soil - Elutriation Method Raw Data

Job Number: 070451 **SEA** **EPA 540-2-90-005, Modified May 23, 2000** **Report Number:** 070451R02

Client: Idaho National Laboratory **Date Received:** 4/23/2007

Project Name: RARE

Client Sample No: **BR-2-R1** Lab/Cor Sample No: **S3**

Client Description: **Date Sampled:**

Gr	No.	Loc.	ID	Prim	Tot	Class	Len	Wid	Asp	Analyte	Elements	Comment	Count Categories
G1	35	I9				NSD							
G2	36	A2				NSD							
G2	37	C2				NSD							
G2	38	E2				NSD							
G2	39	G2				NSD							
G2	40	I2				NSD							
G2	41	J3				NSD							
G2	42	H3				NSD							
G2	43	F3				NSD							
G2	44	D3				NSD							
G2	45	B3				NSD							
G2	46	A4				NSD							
G2	47	C4				NSD							
G2	48	E4				NSD							
G2	49	G4				NSD							
G2	50	I4				NSD							
G2	51	J6				NSD							
G2	52	H6				NSD							
G2	53	G6				NSD							
G2	54	D6				NSD							
G2	55	B6				NSD							
G2	56	A7				NSD							
G2	57	C7				NSD							
G2	58	E7				NSD							
G2	59	G7				NSD							
G2	60	I7				NSD							
G2	61	J8				NSD							
G2	62	H8				NSD							
G2	63	F8				NSD							
G2	64	D8				NSD							
G2	65	B8				NSD							
G2	66	A9				NSD							
G2	67	C9				NSD							
G2	68	E9				NSD							

Count Categories

PAmS_0.5-5	Primary Amphibole Structures >=0.5 - <=5.0µm	PAmS_5	Primary Amphibole Structures >5.0µm
PAS	Primary Asbestos Structures	PCMES-ISO	PCM Equivalent Structures-ISO
PCS_>5	Primary Chrysotile Structures >5.0µm	PCS_0.5-5	Primary Chrysotile Structures >=0.5 - <=5.0µm
TAmpSt, >10	Total Amphibole Structures, > 10, and 3:1	TAmpSt,0.5-5	Total Amphibole Structures,>=0.5 - <=5.0, and 3:1
TAmpSt,5-10	Total Amphibole Structures, >5.0 - <=10, and 3:1	TAS	Total Asbestos Structures

Lab/Cor, Inc.
7619 6th Ave Nw
Seattle, WA 98117

Final Report

Phone: (206) 781-0155
Fax: (206) 789-8424
http://www.labcor.net

A Professional Service Corporation in the Northwest

Soil - Elutriation Method Raw Data

Job Number: 070451 **SEA** **EPA 540-2-90-005, Modified May 23, 2000** **Report Number:** 070451R02

Client: Idaho National Laboratory **Date Received:** 4/23/2007

Project Name: RARE

Client Sample No: **BR-2-R1** Lab/Cor Sample No: **S3**

Client Description: **Date Sampled:**

Gr	No.	Loc.	ID	Prim	Tot	Class	Len	Wid	Asp	Analyte	Elements	Comment	Count Categories
G2	69	G9				NSD							
G2	70	I9				NSD							

Count Categories

PAmS_0.5-5	Primary Amphibole Structures >=0.5 - <=5.0µm	PAmS_5	Primary Amphibole Structures >5.0µm
PAS	Primary Asbestos Structures	PCMES-ISO	PCM Equivalent Structures-ISO
PCS_>5	Primary Chrysotile Structures >5.0µm	PCS_0.5-5	Primary Chrysotile Structures >=0.5 - <=5.0µm
TAmpSt, >10	Total Amphibole Structures, > 10, and 3:1	TAmpSt,0.5-5	Total Amphibole Structures,>=0.5 - <=5.0, and 3:1
TAmpSt,5-10	Total Amphibole Structures, >5.0 - <=10, and 3:1	TAS	Total Asbestos Structures

Lab/Cor, Inc.
7619 6th Ave Nw
Seattle, WA 98117

Final Report

Phone: (206) 781-0155
Fax: (206) 789-8424
http://www.labcor.net

A Professional Service Corporation in the Northwest

Soil - Elutriation Method Raw Data

Job Number: 070451 **SEA** **EPA 540-2-90-005, Modified May 23, 2000** **Report Number:** 070451R02

Client: Idaho National Laboratory **Date Received:** 4/23/2007

Project Name: RARE

Client Sample No: **BR-3-R1** Lab/Cor Sample No: **S4**

Client Description: **Date Sampled:**

Gr	No.	Loc.	ID	Prim	Tot	Class	Len	Wid	Asp	Analyte	Elements	Comment	Count Categories
G1	1	A2				NSD							
G1	2	C2				NSD							
G1	3	E2				NSD							
G1	4	G2				NSD							
G1	5	I2				NSD							
G1	6	J3				NSD							
G1	7	H3				NSD							
G1	8	F3				NSD							
G1	9	D3				NSD							
G1	10	B3				NSD							
G1	11	A4				NSD							
G1	12	C4				NSD							
G1	13	E4				NSD							
G1	14	G4				NSD							
G1	15	I4				NSD							
G1	16	J5				NSD							
G1	17	H5				NSD							
G1	18	G5				NSD							
G1	19	D5				NSD							
G1	20	B5				NSD							
G1	21	A6				NSD							
G1	22	C6				NSD							
G1	23	D6				NSD							
G1	24	G6				NSD							
G1	25	I6				NSD							
G1	26	J7				NSD							
G1	27	H7				NSD							
G1	28	F7				NSD							
G1	29	D7				NSD							
G1	30	B7				NSD							
G1	31	A8				NSD							
G1	32	C8				NSD							
G1	33	E8				NSD							
G1	34	G8				NSD							

Count Categories

PAmS_0.5-5	Primary Amphibole Structures >=0.5 - <=5.0µm	PAmS_5	Primary Amphibole Structures >5.0µm
PAS	Primary Asbestos Structures	PCMES-ISO	PCM Equivalent Structures-ISO
PCS_>5	Primary Chrysotile Structures >5.0µm	PCS_0.5-5	Primary Chrysotile Structures >=0.5 - <=5.0µm
TAmpSt, >10	Total Amphibole Structures, > 10, and 3:1	TAmpSt,0.5-5	Total Amphibole Structures,>=0.5 - <=5.0, and 3:1
TAmpSt,5-10	Total Amphibole Structures, >5.0 - <=10, and 3:1	TAS	Total Asbestos Structures

Lab/Cor, Inc.
7619 6th Ave Nw
Seattle, WA 98117

Final Report

Phone: (206) 781-0155
Fax: (206) 789-8424
http://www.labcor.net

A Professional Service Corporation in the Northwest

Soil - Elutriation Method Raw Data

Job Number: 070451 **SEA** **EPA 540-2-90-005, Modified May 23, 2000** **Report Number:** 070451R02

Client: Idaho National Laboratory **Date Received:** 4/23/2007

Project Name: RARE

Client Sample No: **BR-3-R1** Lab/Cor Sample No: **S4**

Client Description: **Date Sampled:**

Gr	No.	Loc.	ID	Prim	Tot	Class	Len	Wid	Asp	Analyte	Elements	Comment	Count Categories
G1	35	I8				NSD							
G1	36	J9				NSD							
G2	37	A2				NSD							
G2	38	C2				NSD							
G2	39	E2				NSD							
G2	40	G2				NSD							
G2	41	I2				NSD							
G2	42	J3				NSD							
G2	43	H3				NSD							
G2	44	F3				NSD							
G2	45	D3				NSD							
G2	46	B3				NSD							
G2	47	A4				NSD							
G2	48	C4				NSD							
G2	49	E4				NSD							
G2	50	G4				NSD							
G2	51	I4				NSD							
G2	52	J5				NSD							
G2	53	H5				NSD							
G2	54	G5				NSD							
G2	55	D5				NSD							
G2	56	B5				NSD							
G2	57	A6				NSD							
G2	58	C6				NSD							
G2	59	D6				NSD							
G2	60	G6				NSD							
G2	61	I6				NSD							
G2	62	J7				NSD							
G2	63	H7				NSD							
G2	64	F7				NSD							
G2	65	D7				NSD							
G2	66	B7				NSD							
G2	67	A8				NSD							
G2	68	C8				NSD							

Count Categories

PAmS_0.5-5	Primary Amphibole Structures >=0.5 - <=5.0µm	PAmS_5	Primary Amphibole Structures >5.0µm
PAS	Primary Asbestos Structures	PCMES-ISO	PCM Equivalent Structures-ISO
PCS_>5	Primary Chrysotile Structures >5.0µm	PCS_0.5-5	Primary Chrysotile Structures >=0.5 - <=5.0µm
TAmpSt, >10	Total Amphibole Structures, > 10, and 3:1	TAmpSt,0.5-5	Total Amphibole Structures,>=0.5 - <=5.0, and 3:1
TAmpSt,5-10	Total Amphibole Structures, >5.0 - <=10, and 3:1	TAS	Total Asbestos Structures

Lab/Cor, Inc.
7619 6th Ave Nw
Seattle, WA 98117

Final Report

Phone: (206) 781-0155
Fax: (206) 789-8424
http://www.labcor.net

A Professional Service Corporation in the Northwest

Soil - Elutriation Method Raw Data

Job Number: 070451 **SEA** **EPA 540-2-90-005, Modified May 23, 2000** **Report Number:** 070451R02

Client: Idaho National Laboratory **Date Received:** 4/23/2007

Project Name: RARE

Client Sample No: **BR-3-R1** Lab/Cor Sample No: **S4**

Client Description: **Date Sampled:**

Gr	No.	Loc.	ID	Prim	Tot	Class	Len	Wid	Asp	Analyte	Elements	Comment	Count Categories
G2	69	E8				NSD							
G2	70	G8				NSD							
G2	71	I8				NSD							

Count Categories

PAmS_0.5-5	Primary Amphibole Structures >=0.5 - <=5.0µm	PAmS_5	Primary Amphibole Structures >5.0µm
PAS	Primary Asbestos Structures	PCMES-ISO	PCM Equivalent Structures-ISO
PCS_>5	Primary Chrysotile Structures >5.0µm	PCS_0.5-5	Primary Chrysotile Structures >=0.5 - <=5.0µm
TAmpSt, >10	Total Amphibole Structures, > 10, and 3:1	TAmpSt,0.5-5	Total Amphibole Structures,>=0.5 - <=5.0, and 3:1
TAmpSt,5-10	Total Amphibole Structures, >5.0 - <=10, and 3:1	TAS	Total Asbestos Structures

Lab/Cor, Inc.
7619 6th Ave Nw
Seattle, WA 98117

Final Report

Phone: (206) 781-0155
Fax: (206) 789-8424
http://www.labcor.net

A Professional Service Corporation in the Northwest

Soil - Elutriation Method Raw Data

Job Number: 070451 **SEA** **EPA 540-2-90-005, Modified May 23, 2000** **Report Number:** 070451R02

Client: Idaho National Laboratory **Date Received:** 4/23/2007

Project Name: RARE

Client Sample No: **BR-4-R1** Lab/Cor Sample No: **S5**

Client Description: **Date Sampled:**

Gr	No.	Loc.	ID	Prim	Tot	Class	Len	Wid	Asp	Analyte	Elements	Comment	Count Categories
G1	1	C1				NSD							
G1	2	E1				NSD							
G1	3	F1				NSD							
G1	4	G1				NSD							
G1	5	H1				NSD							
G1	6	J3				NSD							
G1	7	H3				NSD							
G1	8	F3				NSD							
G1	9	D3				NSD							
G1	10	B3				NSD							
G1	11	A4				NSD							
G1	12	C4				NSD							
G1	13	E4				NSD							
G1	14	G4				NSD							
G1	15	I4				NSD							
G1	16	J5				NSD							
G1	17	H5				NSD							
G1	18	G5				NSD							
G1	19	D5				NSD							
G1	20	B5				NSD							
G1	21	A6				NSD							
G1	22	C6				NSD							
G1	23	D6				NSD							
G1	24	G6				NSD							
G1	25	I6				NSD							
G1	26	J7				NSD							
G1	27	H7				NSD							
G1	28	F7				NSD							
G1	29	D7				NSD							
G1	30	B7				NSD							
G1	31	A8				NSD							
G1	32	C8				NSD							
G1	33	E8				NSD							
G1	34	G8				NSD							

Count Categories

PAmS_0.5-5	Primary Amphibole Structures >=0.5 - <=5.0µm	PAmS_5	Primary Amphibole Structures >5.0µm
PAS	Primary Asbestos Structures	PCMES-ISO	PCM Equivalent Structures-ISO
PCS_>5	Primary Chrysotile Structures >5.0µm	PCS_0.5-5	Primary Chrysotile Structures >=0.5 - <=5.0µm
TAmpSt, >10	Total Amphibole Structures, > 10, and 3:1	TAmpSt,0.5-5	Total Amphibole Structures,>=0.5 - <=5.0, and 3:1
TAmpSt,5-10	Total Amphibole Structures, >5.0 - <=10, and 3:1	TAS	Total Asbestos Structures

Lab/Cor, Inc.
7619 6th Ave Nw
Seattle, WA 98117

Final Report

Phone: (206) 781-0155
Fax: (206) 789-8424
http://www.labcor.net

A Professional Service Corporation in the Northwest

Soil - Elutriation Method Raw Data

Job Number: 070451 **SEA** **EPA 540-2-90-005, Modified May 23, 2000** **Report Number:** 070451R02

Client: Idaho National Laboratory **Date Received:** 4/23/2007

Project Name: RARE

Client Sample No: **BR-4-R1** Lab/Cor Sample No: **S5**

Client Description: **Date Sampled:**

Gr	No.	Loc.	ID	Prim	Tot	Class	Len	Wid	Asp	Analyte	Elements	Comment	Count Categories
G1	35	I8				NSD							
G1	36	J9				NSD							
G1	37	H9				NSD							
G1	38	F9				NSD							
G1	39	D9				NSD							
G1	40	B9				NSD							
G2	41	A2				NSD							
G2	42	C2				NSD							
G2	43	E2				NSD							
G2	44	G2				NSD							
G2	45	I2				NSD							
G2	46	J3				NSD							
G2	47	H3				NSD							
G2	48	F3				NSD							
G2	49	D3				NSD							
G2	50	B3				NSD							
G2	51	A4				NSD							
G2	52	C4				NSD							
G2	53	E4				NSD							
G2	54	G4				NSD							
G2	55	I4				NSD							
G2	56	J5				NSD							
G2	57	H5				NSD							
G2	58	G5				NSD							
G2	59	D5				NSD							
G2	60	B5				NSD							
G2	61	A7				NSD							
G2	62	C7				NSD							
G2	63	E7				NSD							
G2	64	G7				NSD							
G2	65	I7				NSD							
G2	66	J8				NSD							
G2	67	H8				NSD							
G2	68	F8				NSD							

Count Categories

PAmS_0.5-5	Primary Amphibole Structures >=0.5 - <=5.0µm	PAmS_5	Primary Amphibole Structures >5.0µm
PAS	Primary Asbestos Structures	PCMES-ISO	PCM Equivalent Structures-ISO
PCS_>5	Primary Chrysotile Structures >5.0µm	PCS_0.5-5	Primary Chrysotile Structures >=0.5 - <=5.0µm
TAmpSt, >10	Total Amphibole Structures, > 10, and 3:1	TAmpSt,0.5-5	Total Amphibole Structures,>=0.5 - <=5.0, and 3:1
TAmpSt,5-10	Total Amphibole Structures, >5.0 - <=10, and 3:1	TAS	Total Asbestos Structures

Lab/Cor, Inc.
7619 6th Ave Nw
Seattle, WA 98117

Final Report

Phone: (206) 781-0155
Fax: (206) 789-8424
http://www.labcor.net

A Professional Service Corporation in the Northwest

Soil - Elutriation Method Raw Data

Job Number: 070451 **SEA** **EPA 540-2-90-005, Modified May 23, 2000** **Report Number:** 070451R02

Client: Idaho National Laboratory **Date Received:** 4/23/2007

Project Name: RARE

Client Sample No: **BR-4-R1** Lab/Cor Sample No: **S5**

Client Description: **Date Sampled:**

Gr	No.	Loc.	ID	Prim	Tot	Class	Len	Wid	Asp	Analyte	Elements	Comment	Count Categories
G2	69	D8				NSD							
G2	70	B8				NSD							
G2	71	A9				NSD							
G2	72	C9				NSD							
G2	73	E9				NSD							
G2	74	I9				NSD							

Count Categories

PAmS_0.5-5	Primary Amphibole Structures >=0.5 - <=5.0µm	PAmS_5	Primary Amphibole Structures >5.0µm
PAS	Primary Asbestos Structures	PCMES-ISO	PCM Equivalent Structures-ISO
PCS_>5	Primary Chrysotile Structures >5.0µm	PCS_0.5-5	Primary Chrysotile Structures >=0.5 - <=5.0µm
TAmpSt, >10	Total Amphibole Structures, > 10, and 3:1	TAmpSt,0.5-5	Total Amphibole Structures,>=0.5 - <=5.0, and 3:1
TAmpSt,5-10	Total Amphibole Structures, >5.0 - <=10, and 3:1	TAS	Total Asbestos Structures

Lab/Cor, Inc.
7619 6th Ave Nw
Seattle, WA 98117

Final Report

Phone: (206) 781-0155
Fax: (206) 789-8424
http://www.labcor.net

A Professional Service Corporation in the Northwest

Soil - Elutriation Method Raw Data

Job Number: 070451 **SEA** **EPA 540-2-90-005, Modified May 23, 2000** **Report Number:** 070451R02

Client: Idaho National Laboratory **Date Received:** 4/23/2007

Project Name: RARE

Reviewed by:

Count Categories

PAmS_0.5-5	Primary Amphibole Structures >=0.5 - <=5.0µm	PAmS_5	Primary Amphibole Structures >5.0µm
PAS	Primary Asbestos Structures	PCMES-ISO	PCM Equivalent Structures-ISO
PCS_>5	Primary Chrysotile Structures >5.0µm	PCS_0.5-5	Primary Chrysotile Structures >=0.5 - <=5.0µm
TAmpSt, >10	Total Amphibole Structures, > 10, and 3:1	TAmpSt,0.5-5	Total Amphibole Structures,>=0.5 - <=5.0, and 3:1
TAmpSt,5-10	Total Amphibole Structures, >5.0 - <=10, and 3:1	TAS	Total Asbestos Structures