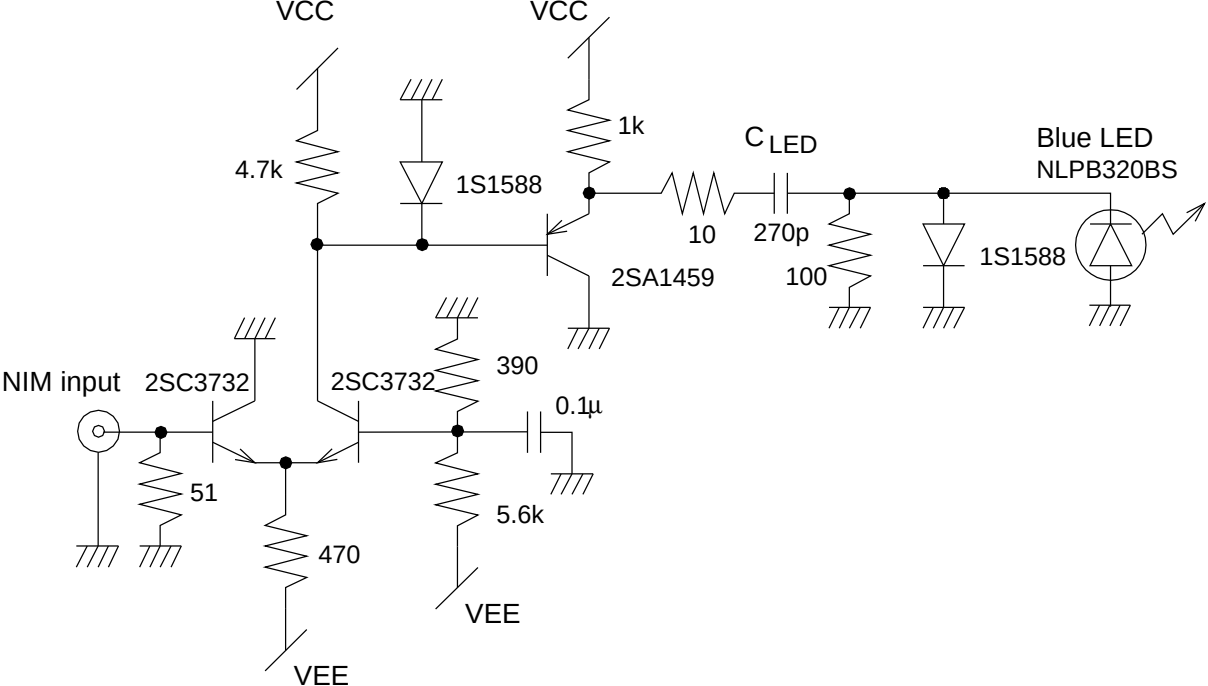
VCC
VCC
1k
C LED
Blue LED
NLPB320BS
4.7k
1S1588
10
270p
100
1S1588
2SA1459
390
NIM input
2SC3732
2SC3732
0.1µ
51
5.6k
470
VEE
VEE