CEC/ICMC

20 K CONTINUOUS CYCLE SORPTION COOLERS FOR THE PLANCK FLIGHT MISSION

P. Bhandari, M. Prina, R.C. Bowman-Jr, C. Paine, D. Pearson, A. Nash

Jet Propulsion Laboratory, California Institute of Technology
Pasadena, CA 91109

ABSTRACT

Two sorption coolers using Hydrogen as the working fluid are currently being fabricated and assembled for flight delivery by the Jet Propulsion Laboratory (JPL). These systems have been designed to provide a total cooling capacity (per cooler) of 1 W at a cold end temperature less than 19 K with a temperature stability of 100-450 mK over a cooler cycle. Being vibration free, scalable and with the capability for the cold end to be remotely located from the warm spacecraft are the major advantages of this class of cryo-coolers. This sorption cooler design has been validated by tests on components, subsystems and a fully integrated breadboard cooler (including electronics) at JPL where the two flight units are now being assembled for delivery to Europe in 2005. They will be used for the Planck Surveyor mission, which will perform high-resolution measurements of the cosmic microwave background anisotropy. In this paper we present the level of maturity of the hydrogen sorption cooler technology at JPL by describing the design and how it has been validated at the subsystem and system levels. In addition, we will describe how such systems could be advantageously used for other space missions with similar needs and cooler attributes.

INTRODUCTION

Planck [1] is a European Space Agency (ESA) mission, whose main objective is to image the temperature anisotropy of the Cosmic Microwave Background (CMB) at high angular resolution (Fig 1). Planck will carry two instruments: the High Frequency Instrument (HFI) and the Low Frequency Instrument (LFI) to enable it to perform these maps. Both the LFI and the HFI instrument sensors need to be cooled to cryogenic temperatures to optimize their signal to noise ratio. The detector cooling system has also to minimize the mechanical vibration to reduce the spurious signal generation on the ultra-sensitive detectors.

The LFI radiometers need a temperature of 20 K reached through a combination of passive cooling to about 50 K and active cooling using a hydrogen sorption cooler to reach lower temperatures. The HFI uses bolometers cooled to 100 mK through a

combination of passive cooling (radiator at 50 K), the 20 K sorption cooler, a 4.5 K Mechanical Joule-Thomson cooler and a Benoit style open cycle Helium dilution cooler. The description of the whole cooling chain has been previously provided by Collaudin, et al. [2] & Wade, et al [3].

KEY REQUIREMENTS

The key requirements of the Planck Sorption Cooler are summarized below:

- Provide 0.986 W Total Heat lift at instrument interfaces with a ≤ 60 K pre-cooling temperature of coldest V-Groove
- Maintain the following instrument interfaces temperatures:
  - LFI @ ≤ 22.5 K *[80% of Total Heat Lift]*
  - HFI @ ≤ 19.02 K *[20% of Total Heat Lift]*
- Temperature stability *(over TMU operating period, ~4000 s):*
  - ≤ 450 mK, max. to min. at HFI Interface
  - ≤ 100 mK, max. to min. at LFI Interface
- TMU Input Power Consumption ≤ 470 W (End of Life)
- Operational Lifetime: ≥ 2 years (incl. Testing)
- Storage Life: ≥ 6 years
- Two completely *independent* cooler systems (TMU + Electronics)
  - Provides 100% redundancy
- Total Mass per TMU (excl. electronics): ≤ 53.3 kg
- Total Compressor Volume per TMU: ≤ 1m X 0.75m X 0.25m

MATURITY OF SORPTION COOLERS

JPL has been a pioneer in the development and application of Sorption Coolers for space missions. A proof of principle sorption cooler was developed, built and tested in 1992 [4]. Following that a batch mode sorption cooler, BETSCE, was tested in space aboard the Space Shuttle in 1996 [5]. This cooler produced solid hydrogen at 10 K. The two Planck sorption coolers are the first continuous cycle sorption coolers to be used for a space mission.

APPLICATION OF SORPTION COOLER TO SPACE MISSIONS

Sorption coolers are attractive systems to provide cooling for instruments, detectors and telescopes when a vibration free system with no moving parts is desired. Since the pressurization and evacuation uses hydride beds that are simply heated and cooled sequentially with no moving parts like compressors or turbines, they tend to be very robust. This provides excellent reliability and long life. Since they employ Joule-Thomson cooling by a simple expansion through orifices, the cold end can be located remotely from the warm end. Since the spacecraft's warm end is by design located away (thermally and spatially) from the payload, this allows for excellent flexibility in

integration of the cooler to the cold payload (instrument, detectors and telescope mirrors) and the warm spacecraft.

DETAILS OF COOLER OPERATION

The sorption cooler is composed of a Thermo-mechanical Unit (TMU) and the electronics to operate the TMU. The primary focus of this paper is the TMU.

The sorption cooler (Fig 2) performs cooling using Joule-Thomson (J-T) expansion employing hydrogen as the working fluid. The key element of the 20 K sorption cooler is the compressor, an absorption machine that pumps hydrogen by thermally cycling several sorbent compressor elements. The principle of operation of the sorption compressor is based on a unique sorption material ($La_{1.0}Ni_{4.78}Sn_{0.22}$) [1,2], which can absorb large amounts of hydrogen at relatively low pressures, and which will desorb to produce high-pressure hydrogen when heated in a limited volume. Electrical resistance heaters accomplish heating of the sorbent while the cooling is achieved by thermally connecting the compressor element to a radiator at 270 K. As a sorption compressor element (i.e. sorbent bed) is taken through four steps (heat up, desorption, cool down, absorption) in a cycle, it will intake low-pressure hydrogen and output high-pressure hydrogen on an intermittent basis. In order to produce a continuous stream of liquid refrigerant several such sorption beds are needed to stagger their phases so that at any given time, one is desorbing while the others are either heating, cooling, or re-absorbing low-pressure gas. In such a system, there is a basic clock time period over which each step of the process is conducted.

In order not to lose excessive amounts of heat during the heating cycle, a heat switch is provided to alternately isolate the sorbent bed from the radiator during the heating cycle, and to connect it to the radiator thermally during the cooling cycle. A single compressor element is comprised of two concentric cylinders closed with end caps. The inner of these tubes contains $La_{1.0}Ni_{4.78}Sn_{0.22}$ hydride material and the outer forms a vacuum jacket around the inner cylinder. This vacuum jacket is used as a gas-gap heat switch [7].

The compressed refrigerant hydrogen flows through the compressor to the high-pressure stabilization tanks (HPST) that are maintained at 4.8 MPa (48 atm.). The refrigerant than travels from the tanks through a series of heat exchangers attached to V-Groove radiators on the spacecraft, which provide pre-cooling to approximately 60 K (Fig 2), followed by expansion through the J-T expander. Upon expansion, hydrogen forms liquid droplets whose evaporation provides the cooling power. The liquid/vapor mixture then sequentially flows through the first two Liquid Vapor Heat Exchangers (LVHX). The LVHXs are thermally and mechanically coupled to the corresponding instrument (LFI/HFI) interface. Finally the liquid vapor mixture flows through the third LVHX that is maintained above the hydrogen saturated vapor temperature to evaporate any excess liquid that reaches it to avoid flash boiling to help maintain a nearly constant pressure in the low-pressure plenum. Heat from the sensors evaporates liquid hydrogen and the low-pressure gaseous hydrogen is re-circulated back to the cool sorbent beds for compression.

Each compressor element is connected to both the high pressure and low-pressure sides of the plumbing system through check valves, which allow gas flow in a single direction only. To damp out oscillations on the high-pressure side of the compressor, a four-liter high-pressure stabilization tank is utilized. On the low-pressure side, a low-pressure storage sorbent bed is adopted to reduce the low-pressure fluctuations. The compressor assembly mounts directly onto the heat rejection radiator on the spacecraft.

STATUS OF PLANCK SORPTION COOLERS

Two sorption coolers are currently being assembled for delivery for the Planck mission. The launch is scheduled for 2007. The two flight coolers are scheduled for delivery in early 2005. Prior to flight cooler delivery, in early 2004, a Cryogenic Qualification model of the Piping and cold end assembly (PACE) is to be delivered to ESA for vibration and cryogenic testing when coupled to the Planck spacecraft and payload systems to validate the structural and cryogenic performance of the PACE which is very integrally coupled (mechanically and thermally) to the relatively flexible V-Grooves and the instrument interfaces and its performance (thermal and structural) is intimately connected to these interfaces.

At the time this paper was written, for the first Planck flight cooler, all the compressor elements and the low pressure stabilization beds have been assembled, fully tested and delivered to the next level of assembly, the Compressor Assembly. The compressor assembly for the first cooler is almost assembled and getting ready for testing. The cold end for the cryogenic qualification model of the PACE has been assembled and the piping assembly has started. All systems are go to meeting the scheduled delivery dates.

QUALIFICATION OF THE PLANCK COOLERS, SUBSYSTEMS & COMPONENTS

To achieve an acceptable level of performance and robust operation with these hydride coolers during flight, detailed investigations have been performed on the sorbent materials and on all critical hardware components [8].

Component Level

The sorbent longevity has been verified for both the compressor alloy and the gas gap actuator alloy using accelerated life test cells containing these hydrides that were aged for a range of elevated temperatures. Check valves that isolate the high- and low-pressure sides within the sorption compressor are potential single-point failures as internal leaks would short circuit hydrogen flow to the Joule-Thomson (J-T) expander. To assess this risk, check valves were operated using hydrogen gas for over 43,000 pressure cycles at various orientations and temperatures and they exhibited no leaks or other changes. The filters that will be used to protect check valves and J-T expander from particles were tested in the same set up along with the check valves. The durability

and reliability of low-power heaters used for the gas gap actuators were determined by accelerated temperature cycling.

All the critical components, e.g., check valves & filters, pressure transducers, isolation valves, warm getter, were vibration tested and thermally cycled to qualify them for launch. All the welds used in the cooler were qualified by subjecting the samples, made with the same schedules that would be used for the flight coolers, to X-rays, pull tests, etc. All the critical components and subassemblies were proof tested to qualify their structural designs. In addition, the LPSB, HPST and a CE with designs identical to those for flight were burst tested.

The 50 K charcoal filter was tested for its absorption capacity and found to trap about 3 orders of magnitude more capacity than needed for the flight coolers. The J-T expanders were characterized flow rate under prescribed conditions for flight by thermal cycling and cool downs to representative temperatures. All cold end heaters were thermal cycled down to cryogenic temperatures. The tubes in tube heat exchangers were characterized for their thermodynamic performance. All the cold end sensors were irradiated with representative doses to qualify them for proton and gamma radiation. The LVHXs utilized in the flight coolers are identical to those tested in the EBB cooler.

Almost all the components used in the engineering breadboard (EBB) cooler were identical to those used for flight. This provided excellent qualification of these components at the system level.

Subsystem Level

Three compressor elements (CE) were cycled to simulate temperature and pressure conditions that would be experienced by the flight CEs for 5,000 cycles each. The GGAs were cycled for 24,000 cycles in prototype units. A pathfinder test that used a flight CE without the hydride in the CE and a flight GGA was used to qualify the GGA hydride size and the entire gas-gap system for maintenance of low pressure vacuum (~10 mTorr) conditions during the off-state and medium pressure (~10 Torr) vacuum conditions in the on state [9].

System Level (EBB Cooler)

In order to validate the sorption cooler flight design, an Engineering Breadboard (EBB) cooler was developed [9-10]. Testing of the EBB cooler began in January, 2002, and ended in May, 2003. Throughout this period, the cooler was operated for a total of 4300 hours, during which its performance was verified with respect to the flight requirements. The EBB provided a synergistic system test prior to the construction of the flight coolers. The results obtained in the 12 months of test campaign gave an extraordinary insight in operation of the sorption cooler, confirming the predictions and analysis [11], and validating the flight design. In addition, operation of the EBB was used to develop robust operational algorithms, which were implemented in the flight prototype electronics. Testing it with the EBB cooler also validated the prototype electronics.

All the components for the flight cooler have been built to be functionally equivalent to those of the EBB, with a few exceptions. For this reason, the subassembly

interactions and performance in the EBB are considered to be representative of those expected of the flight models.

All the lessons learned during the EBB tests have been included in the design and operation of the flight cooler. In addition, the EBB test validated the basic functionality of the test facility. The facility will remain essentially the same for the flight cooler testing, except for modifications required to accommodate the geometric configuration of the flight cooler. The enormous experience gained from the extensive EBB testing campaign greatly improved the reliability, robustness, and ability of the flight cooler to meet its requirements during testing and during flight.

Sample of Important Lessons Learned From the EBB Tests that were Employed for the Flight Coolers

a) Automatic J-T plug detection and defrost procedures: This is done by the software automatically detecting a pressure rise due to a plug, discriminate between a true plug and that due to a flow reduction due to off-normal J-T operating conditions (warmer J-T during startup, energize the defrost heater that is then followed by a full recovery of flow.
b) Cooler pressurization with conditioning mode: An elegant scheme was devised to achieve fast pressurization and establishment of normal cooling after a fresh cooler start or a restart after shutdown initiated by the spacecraft. The primary algorithm is based on an adaptive change in cooler cycle time to inject the maximum energy into the bed heaters safely and within the constraints of operating the cooler reliably. Compared to constant energy injection in normal mode, the conditioning mode with adaptive energy insertion speed up the pressurization by about factor of three.
c) Contamination mitigation by recharging cooler with fresh H2 after a few weeks of operation that flushes out any residual contaminants in the cooler.
d) Coupled testing of the cooler (TMU) with the French (LPSC) supplied electronics characterized the electronics hardware and software components as a subsystem, testing their compliance with cooler control and monitoring requirements and validated the Planck Sorption Cooler at system level (TMU+LPSC Electronics).

CONCLUSIONS

Extremely successful testing of the EBB cooler demonstrated the viability of sorption coolers designed for space missions. Excellent agreement between predictions for the EBB cooler performance and the test results validated the flight cooler design. All important lessons learned from EBB testing were incorporated in the design, assembly and testing of the flight coolers. Excellent progress has been made in the construction of the coolers that will be delivered to ESA for the Planck mission. Based on the approach taken to design, build and test the flight coolers and the progress made until now, all indications are the Planck sorption coolers will operate successfully in flight and meet their requirements. Success of the Planck coolers will pave the way for a more widespread usage of such coolers for space missions.

ACKNOWLEDGEMENTS

The research described in this paper was carried out at the Jet Propulsion Laboratory, California Institute of Technology, under a contract with the National Aeronautics and Space Administration.

REFERENCES

1. Tauber, J. A., "The Planck Mission," in *The Extragalactic Infrared Background and its Cosmological Implications*, International Astronomical Union. Symposium No. 204, Manchester, England, 2000. pp. 493-504.
2. Collaudin, B. and Passvogel, T., Cryogenics **39**, 157 (1999).
3. Wade, L. A., et al., "Hydrogen Sorption Cryocoolers for the Planck Mission," in Advances in Cryogenic Engineering 45A, edited by Q-S. Shu, et al., Kluwer Academic/Plenum, New York, 2000, pp. 499-506.
4. Wu, J.J., Bard, S., Boulter, W., Rodriguez, J., Longsworth, R., "Experimental Demonstration of a 10 K Sorption Cryocooler Stage", Adv. Cryogenic Engineering 39 (1994) pp. 1507-1514.
5. Bard, S., Cowgill, P., Rodriguez, J., Wade, L., Wu, J.J., Gehrlin, M., and Van Der Ohe, W., "10 K Sorption Cryocooler Flight Experiment (BETSCE)", 7th International Cryocooler Conference Proceedings, Air Force Phillips Laboratory Report PL-CP-93-1001, Kirtland AFB, NM, (1993), pp. 1107-1119.
6. Prina, M., Bhandari, P., Bowman, Jr., R. C., Paine, C. G., Wade, L. A., "Development of Gas Gap Heat Switch Actuator for the Planck Sorption Cryocooler," in Advances in Cryogenic Engineering 45A, edited by Q-S. Shu, et al., Kluwer Academic/Plenum, New York, 2000, pp. 553-560.
7. Bowman, R. C., Prina, M., Schmelzel, M. E., Lindensmith, C. A., Barber, D. S., Bhandari, P., Loc, A., and Morgante, G., "Performance, Reliability and Life Issues for Components of the Planck Sorption Cooler", *Advances in Cryogenic Engineering*, Plenum Press, Vol. 47B, (Am. Inst. Phys. NY 2002) pp. 1260-1267.
8. Bowman, R.C., Reiter, J.W., Prina, M., Kulleck, J.G., Lanford, W.A., "Hydride Compressor Sorption Cooler and Surface Contamination Issues", pp. 275-291, *Hydrogen in Material and Vacuum Systems*, AIP 0-7354-0137 (2003)
9. Prina, M., Morgante, G., Loc, A., Schmelzel, M., Pearson, D., Borders, J.W., Bowman, R.C., Sirbi, A., Bhandari, P., Wade, L.A., Nash, A., "Initial Test Performance of a Closed-Cycle Continuous Hydrogen Sorption Cooler, the Planck Sorption Breadboard Cooler", *Cryocoolers 12*, Plenum Publishers, pp. 637-642.
10. Pearson, D., Borders J., Prina, M., Morgante, G., Bhandari, P., Bowman, R.C., Loc, A., "Planck Engineering Breadboard Sorption Cooler Test Results Over Its Entire Operating Range", *Proceedings of the 19th International Cryogenic Engineering Conference*, Narosa Publishing House, pp. 507-510 (2003).
11. Bhandari, P., Prina, M., Ahart, M., Bowman, R. C., and Wade, L. A., "Sizing and Dynamic Performance Prediction Tools for 20 K Hydrogen Sorption Cryocoolers," in *Cryocoolers 11*, edited by R. G. Ross, Jr., Kluwer Academic/Plenum, New York, 2001 pp. 541-549.

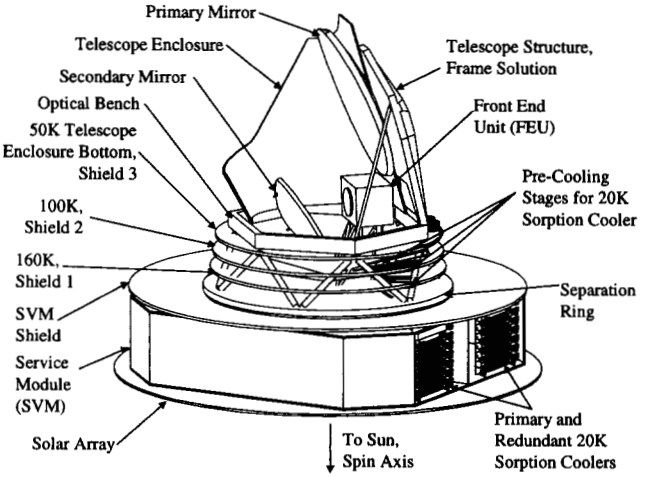

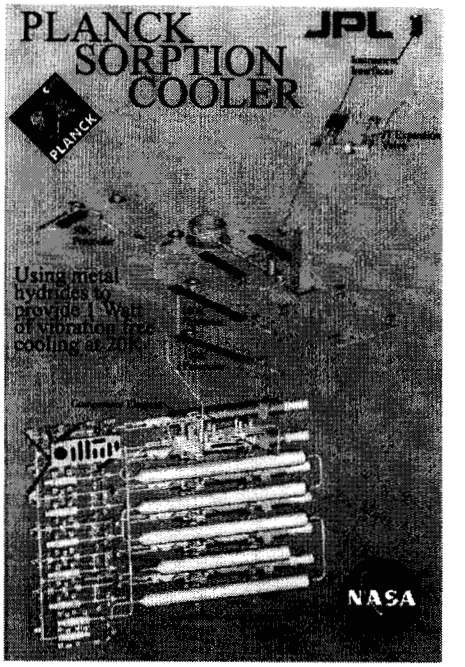

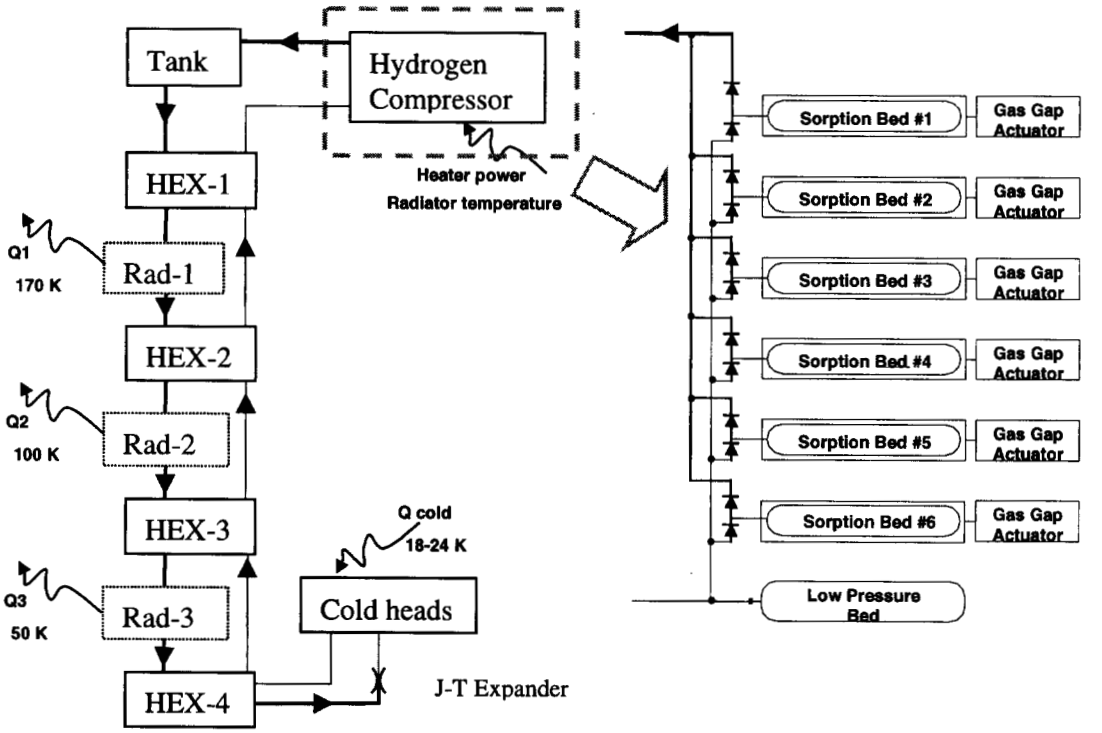

FIGURE 1. Planck sorption cooler schematic, with the three pre-cooling radiators, four heat exchangers, the cold heads and the compressor. The arrows in front of each bed sorption bed are check valves, allowing flow only in the arrow direction.