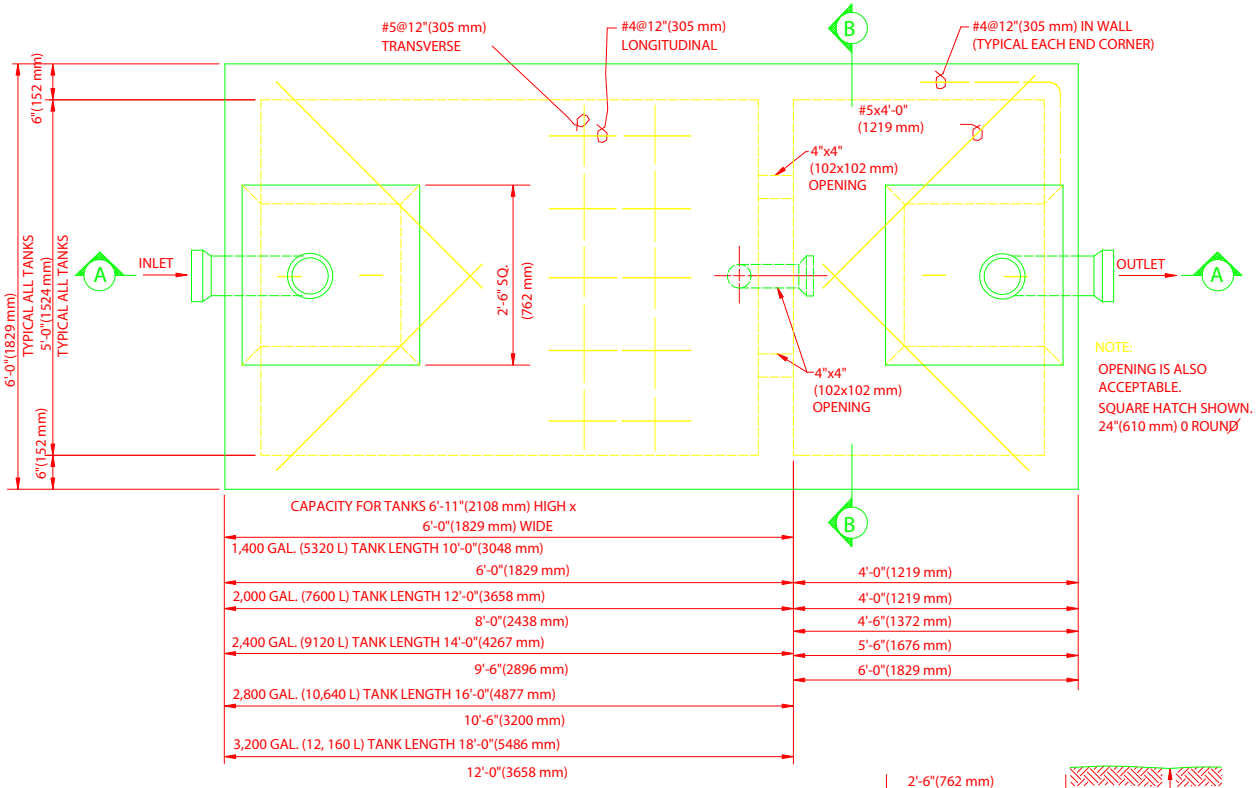

PLAN

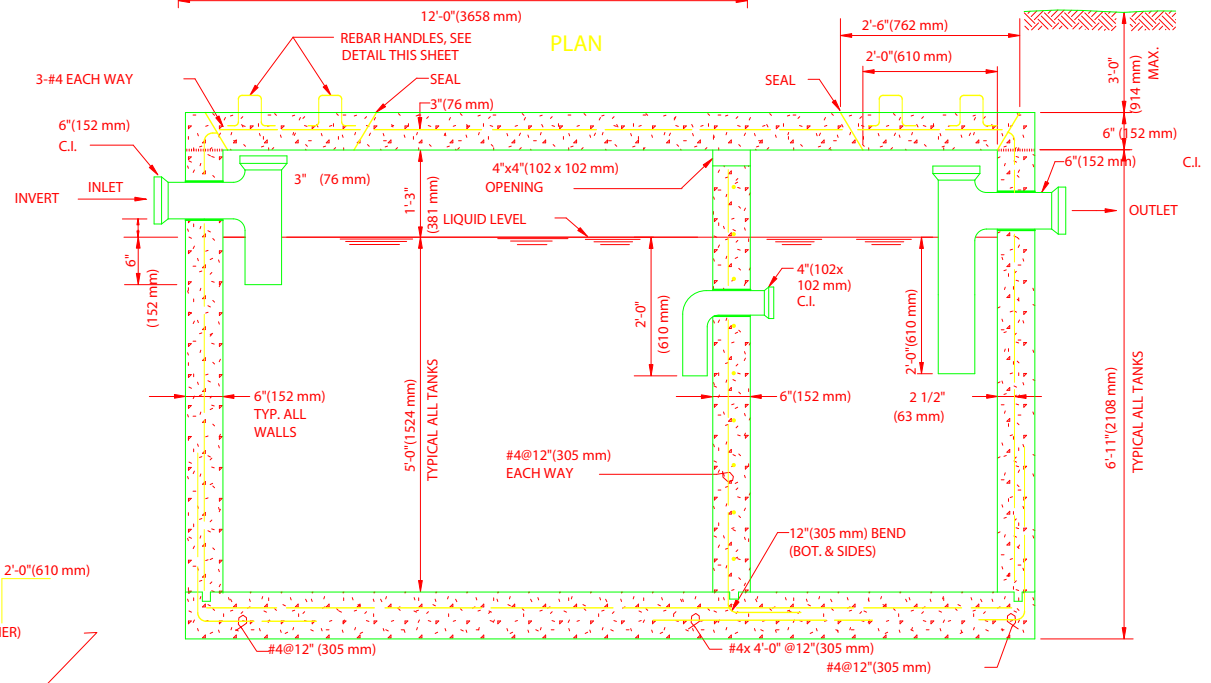

SECTION A-A

NOTE:

1. THE METRIC CONVERSIONS ARE PROVIDED IN PARENTHESIS FOLLOWING THE ENGLISH UNITS.

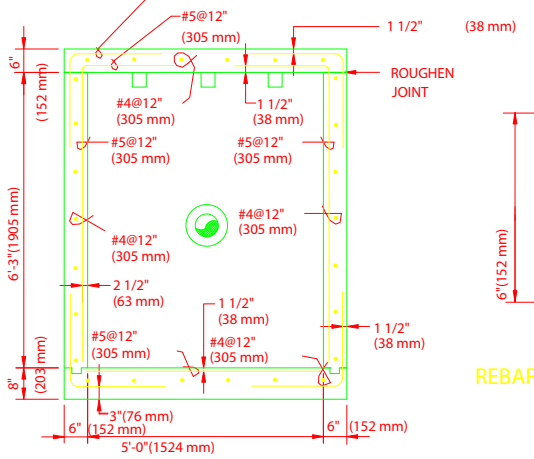

SECTION B-B

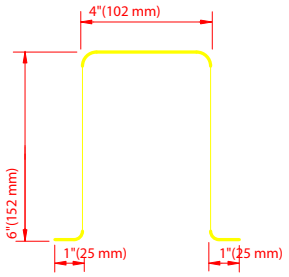

REBAR HANDLE DETAIL