# L2 Decision Crate Power Supply Harness

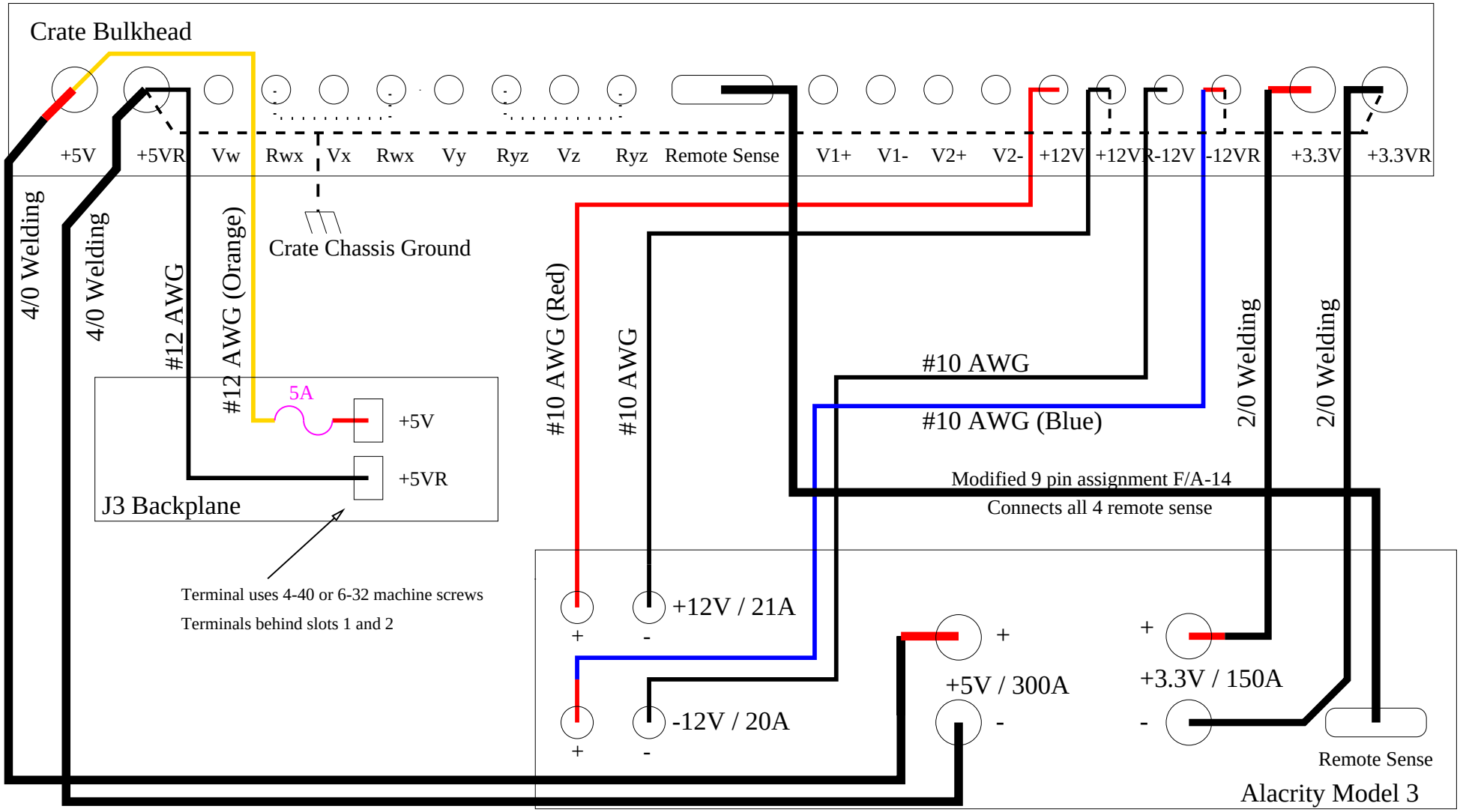


Notes:

1. All wire insulation minimum 90 deg Celsius rating and black unless otherwise noted
2. All remote sense connections fused internally on crate backplane
3. The following returns are connected together internally on the crate backplane:
   - – +5VR/+12VR/-12VR/+3.3VR · · · RVw/RVx · · · RVy/RVz
4. This drawing applies to the all the the follwoing crates: 2RR22F-T and 2RR22F-B (2 total)

Revision A: add notes on Remote sense cable and add power to J3

| | |
|---|---|
| Drawing: L2 Decsion Crate PS Harness | |
| By: P. Wilson | Date: 11/16/99 |
| DWG#: PJW991116-08 | Revision A 10/31/01 |
| Purpose: Show power connections for L2 Decision crate and Alacrity Model 3 power supply. Includes connection of returns to ground. | |