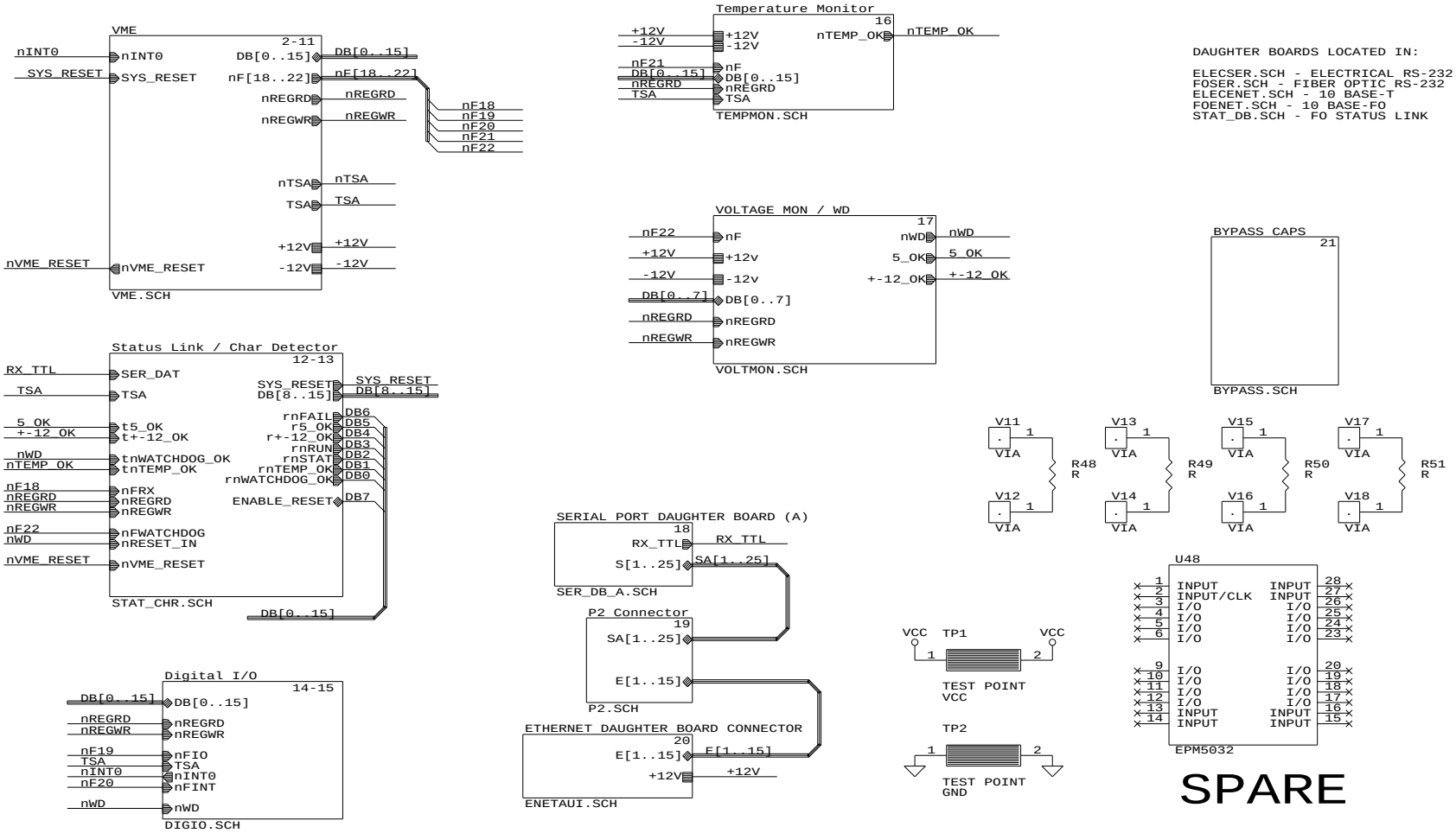

FIX INTERRUPTS
FASTER BINARY OUTPUTS
CLEAR BO ON RESET
GET RID OF VXI
FIX VOLTAGE MON

Accelerator Systems Division Advanced Photon Source Argonne National Laboratory		
Title VME SYSTEM MONITOR		
Size B	Document Number SYSMON4.SCH	REV D
Date: December 6, 1994	Sheet 1 of 21	

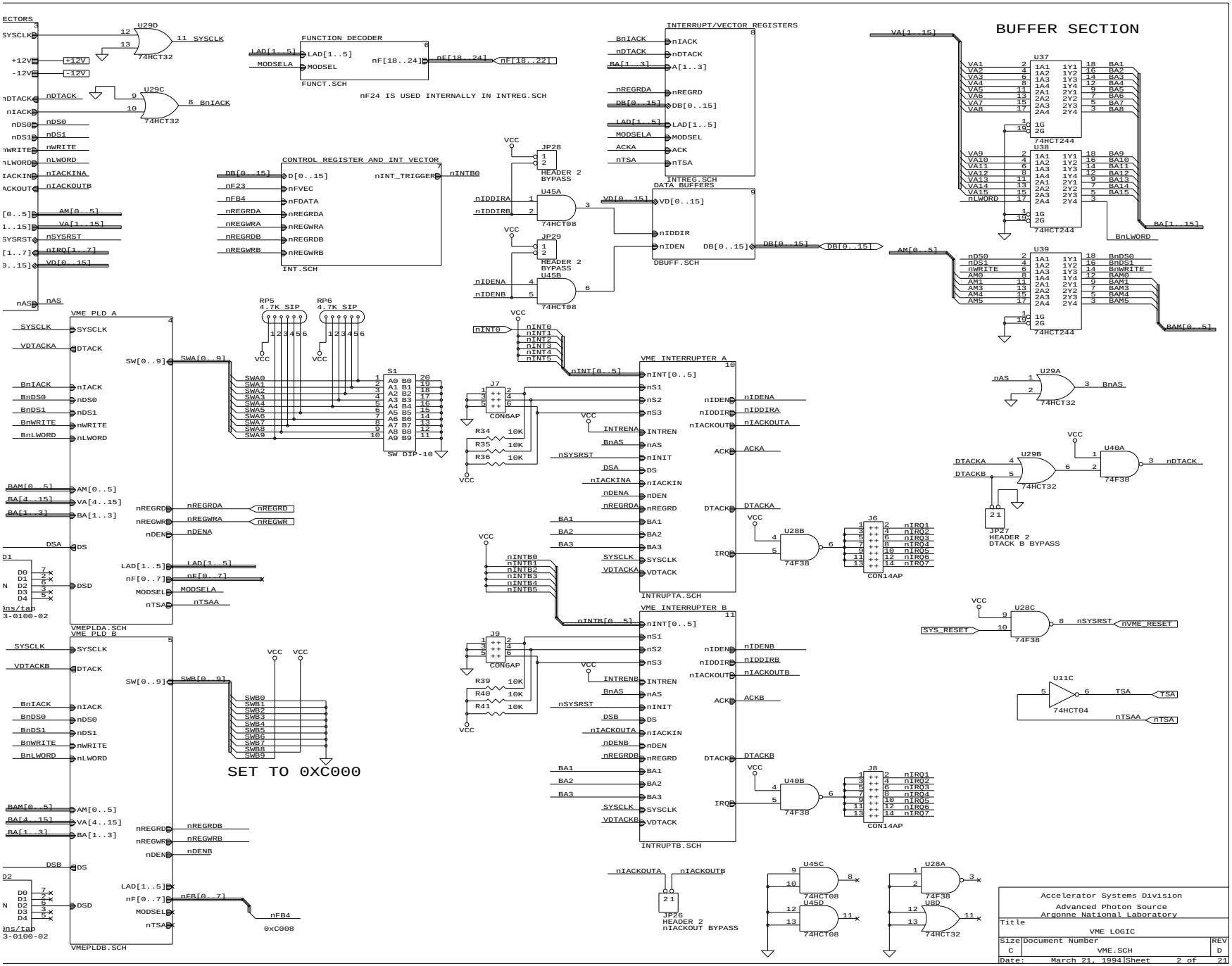
BUFFER SECTION
FUNCTION DECODER
FUNCT.SCH
nF24 IS USED INTERNALLY IN INTREG.SCH
INTERRUPT/VECTOR REGISTERS
INTREG.SCH
CONTROL REGISTER AND INT VECTOR
INT.SCH
DATA BUFFERS
DBUFF.SCH
VME PLD A
VMEPLDA.SCH
VME PLD B
VMEPLDB.SCH
VME INTERRUPTER A
INTRUPTA.SCH
VME INTERRUPTER B
INTRUPTB.SCH
SW DIP-10
SET TO 0XC000
HEADER 2 BYPASS
HEADER 2 DTACK B BYPASS
HEADER 2 nIACKOUT BYPASS
Accelerator Systems Division
Advanced Photon Source
Argonne National Laboratory
Title
VME LOGIC
Size C
Document Number VME.SCH
REV D
Date: March 21, 1994
Sheet 2 of 21

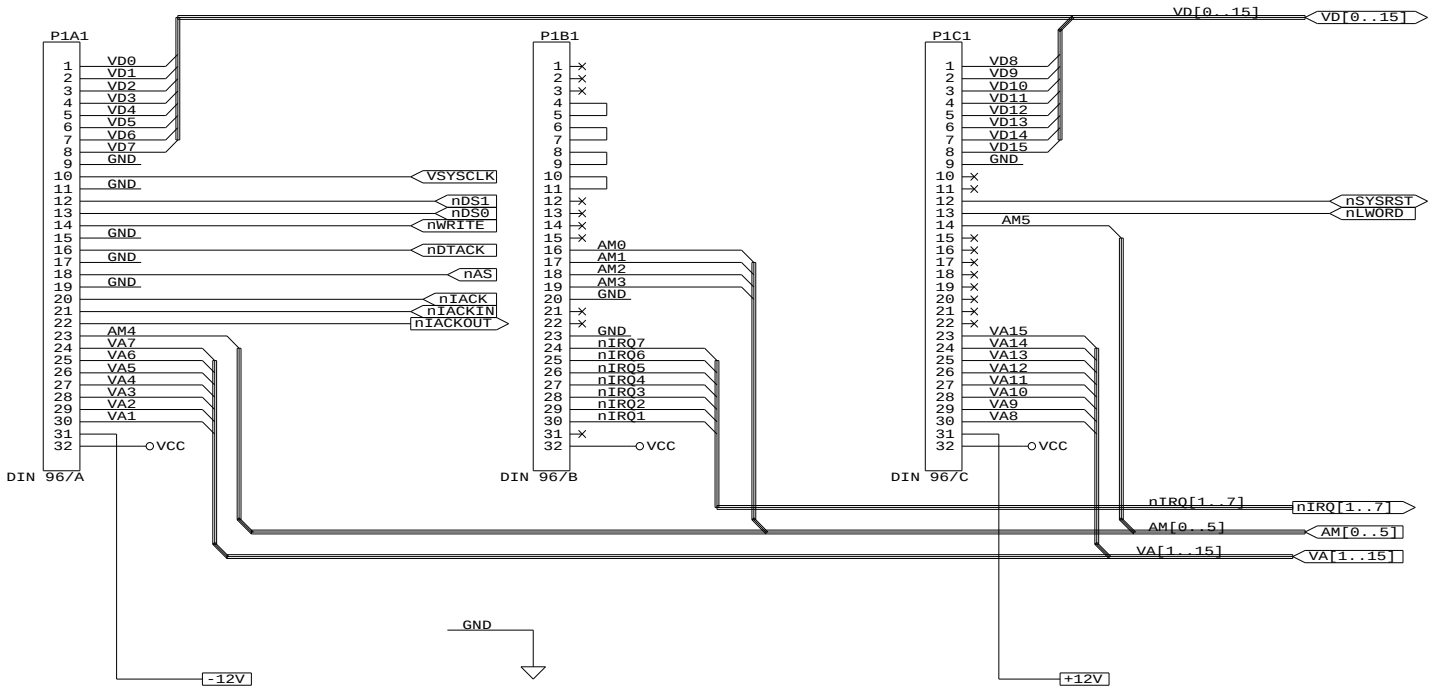

Accelerator Systems Division Advanced Photon Source Argonne National Laboratory		
Title: VME CONNECTORS		
Size: B	Document Number: CONN.SCH	REV: C
Date: March 10, 1994	Sheet 3 of 21	

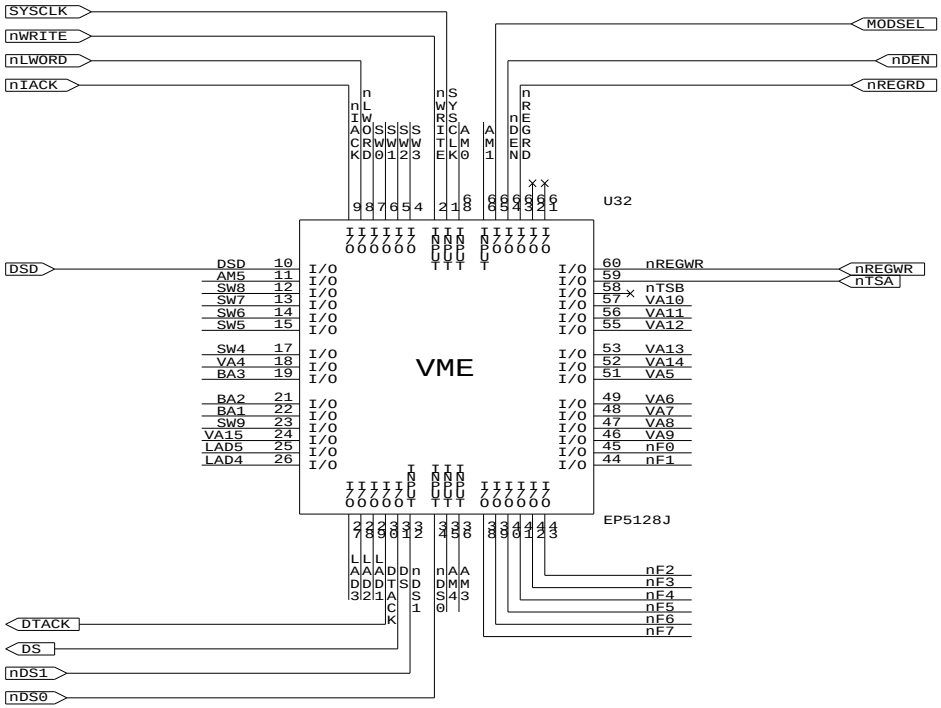

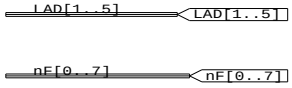

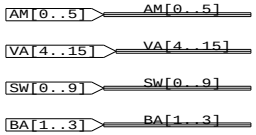

AM2 DOES NOT GET CONNECTED

AM2

Accelerator Systems Division Advanced Photon Source Argonne National Laboratory		
Title: VME PLD		
Size: B	Document Number: VMEPLDA.SCH	REV: C
Date: March 10, 1994	Sheet 4 of 21	

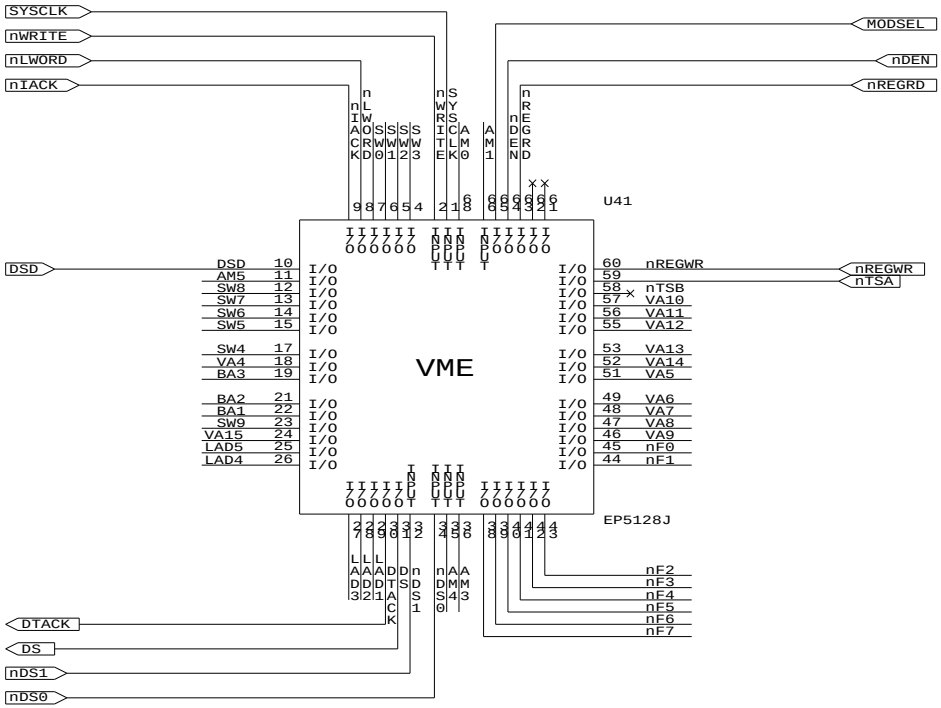

LAD[1..5] — LAD[1..5]

nF[0..7] — nF[0..7]

AM[0..5] — AM[0..5]

VA[4..15] — VA[4..15]

SW[0..9] — SW[0..9]

BA[1..3] — BA[1..3]

AM2 DOES NOT GET CONNECTED

AM2

Accelerator Systems Division
Advanced Photon Source
Argonne National Laboratory

Title: VME PLD - MESSAGE REGISTER DECODER

Size	Document Number	REV
B	VMEPLDB.SCH	C

Date: March 10, 1994 | Sheet 5 of 21

LAD[1..5] LAD[1..5]

nF[18..24] nF[18..24]

MODSEL MODSEL

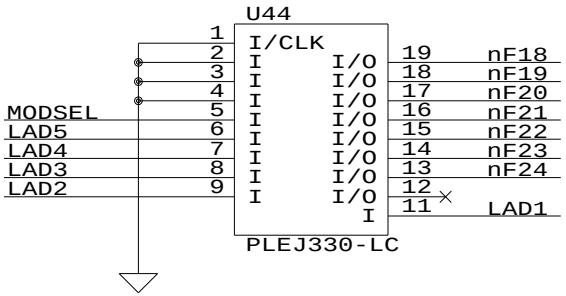

C:\ALTERA\SYSMON2\FUNCT.GDF

ALTERA: FUNCT.GDF

Accelerator Systems Division Advanced Photon Source Argonne National Laboratory		
Title FUNCTION DECODER		
Size A	Document Number FUNCT.SCH	REV C
Date: March 10, 1994	Sheet 6 of 21	

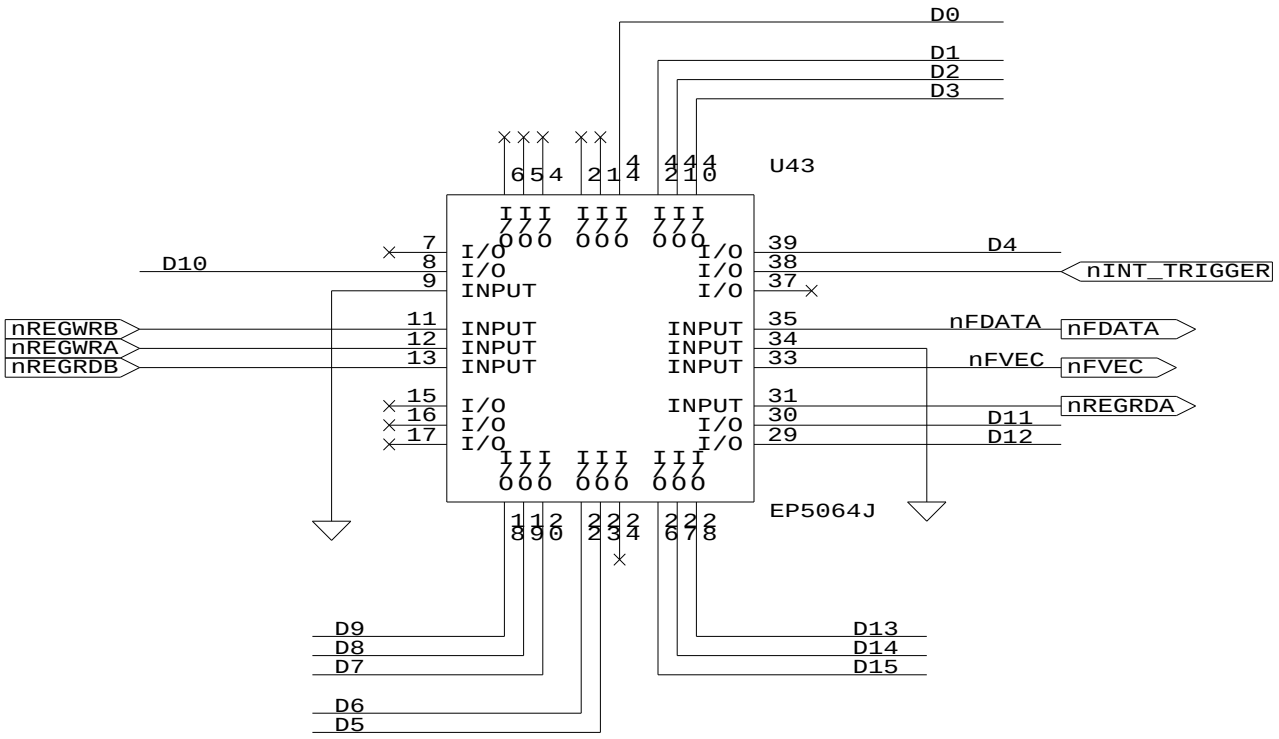

C:\ALTERA\SYSMON2\INT.GDF

D[0..15] D[0..15]

Advanced Photon Source - Controls Group Argonne National Laboratory 9700 South Cass Avenue Argonne, IL 60517		
Title CONTROL REGISTER AND INT VECTOR		
Size A	Document Number INT.SCH	REV C
Date: March 10, 1994	Sheet 7 of 21	

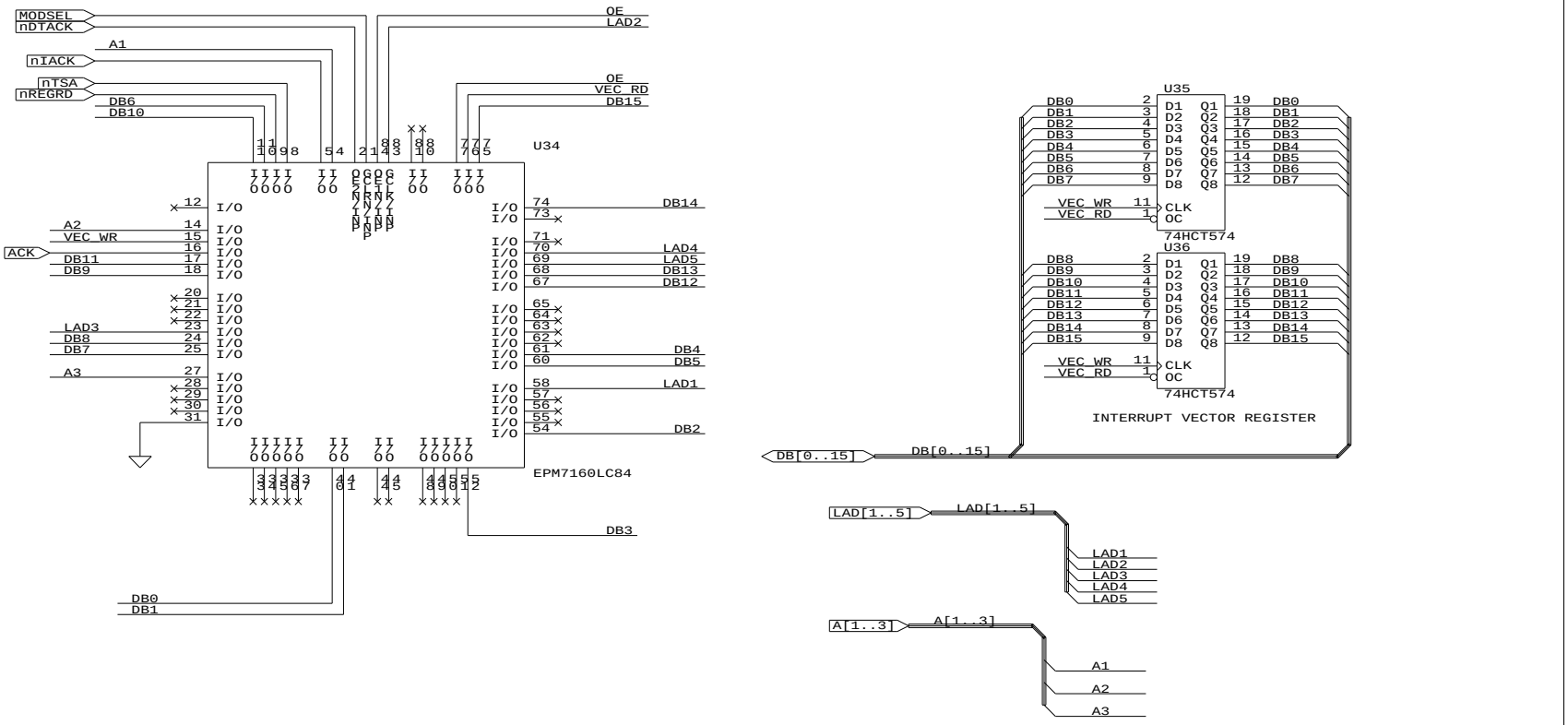

C:\ALTERA\SYSMON2\INT_FUN.GDF

Advanced Photon Source - Controls Group Argonne National Laboratory 9700 South Cass Avenue Argonne, IL 60517		
Title: INTERRUPT REGISTERS		
Size: B	Document Number: INTREG.SCH	REV: C
Date: March 10, 1994	Sheet 8 of 21	

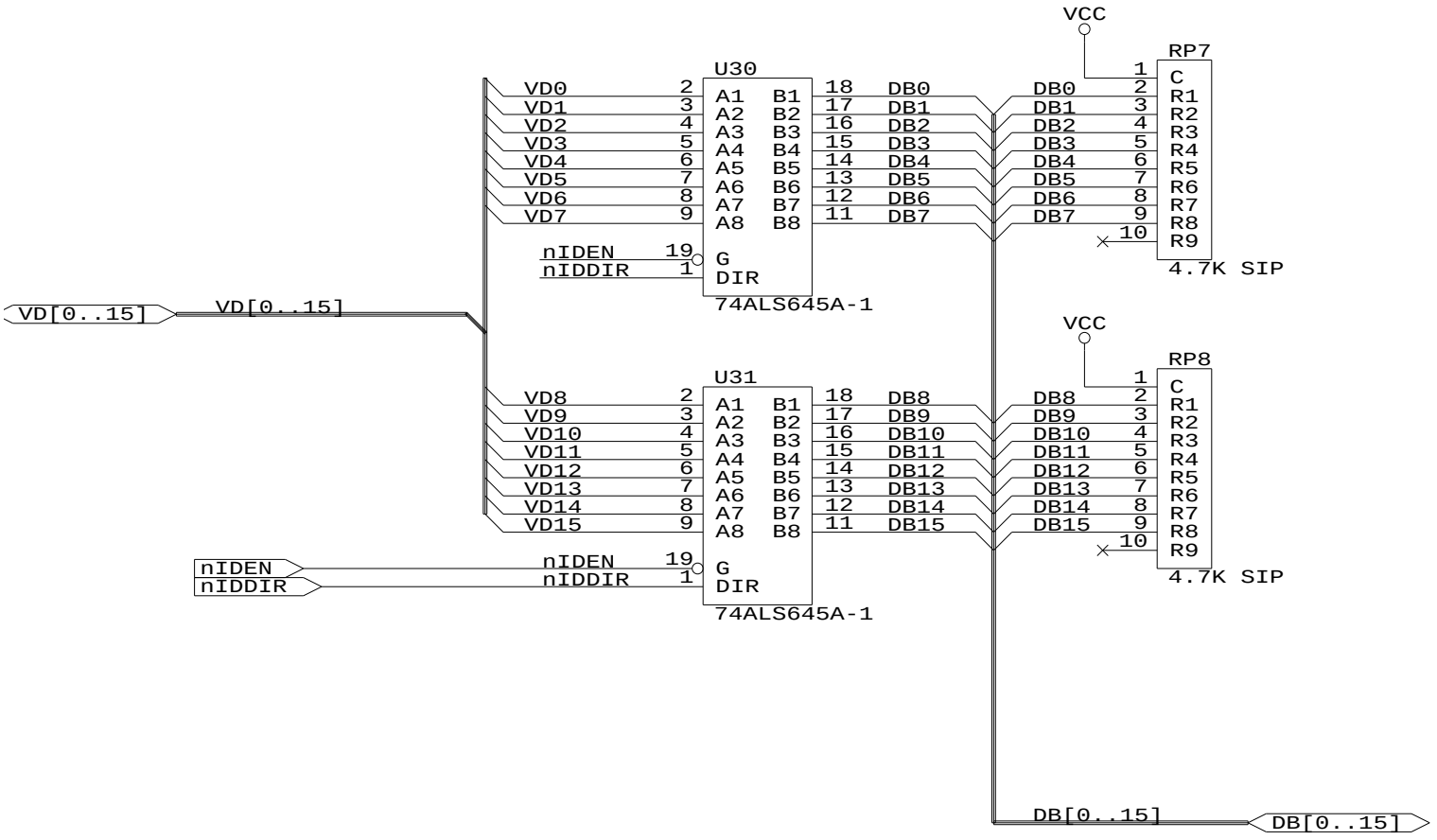

Accelerator Systems Division Advanced Photon Source Argonne National Laboratory		
Title DATA BUFFERS		
Size A	Document Number DBUFF.SCH	REV C
Date: March 10, 1994	Sheet 9 of 21	

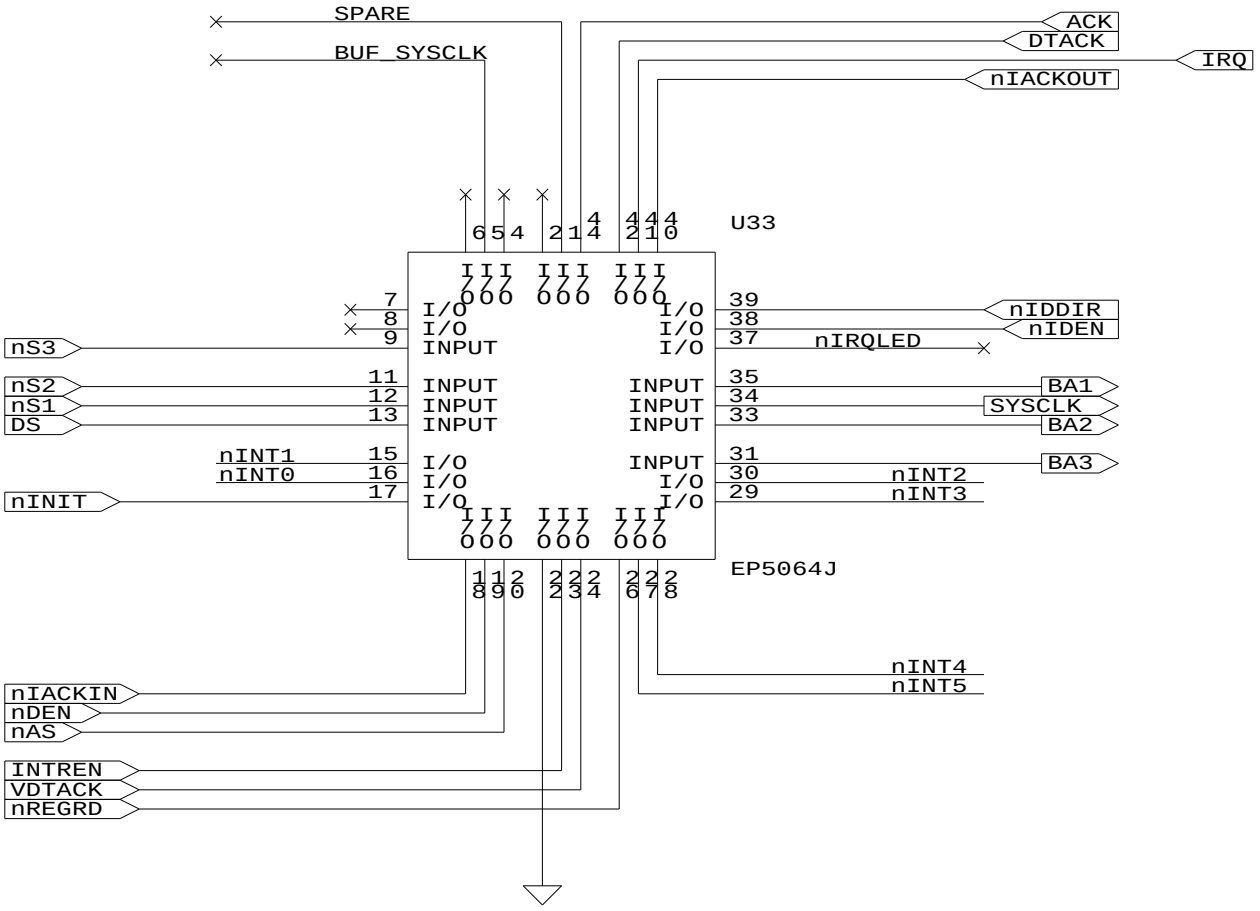

nINT[0..5] nINT[0..5]

Accelerator Systems Division Advanced Photon Source Argonne National Laboratory		
Title VME INTERRUPTER A		
Size A	Document Number INTRUPTA.SCH	REV C
Date: March 10, 1994	Sheet 10 of 21	

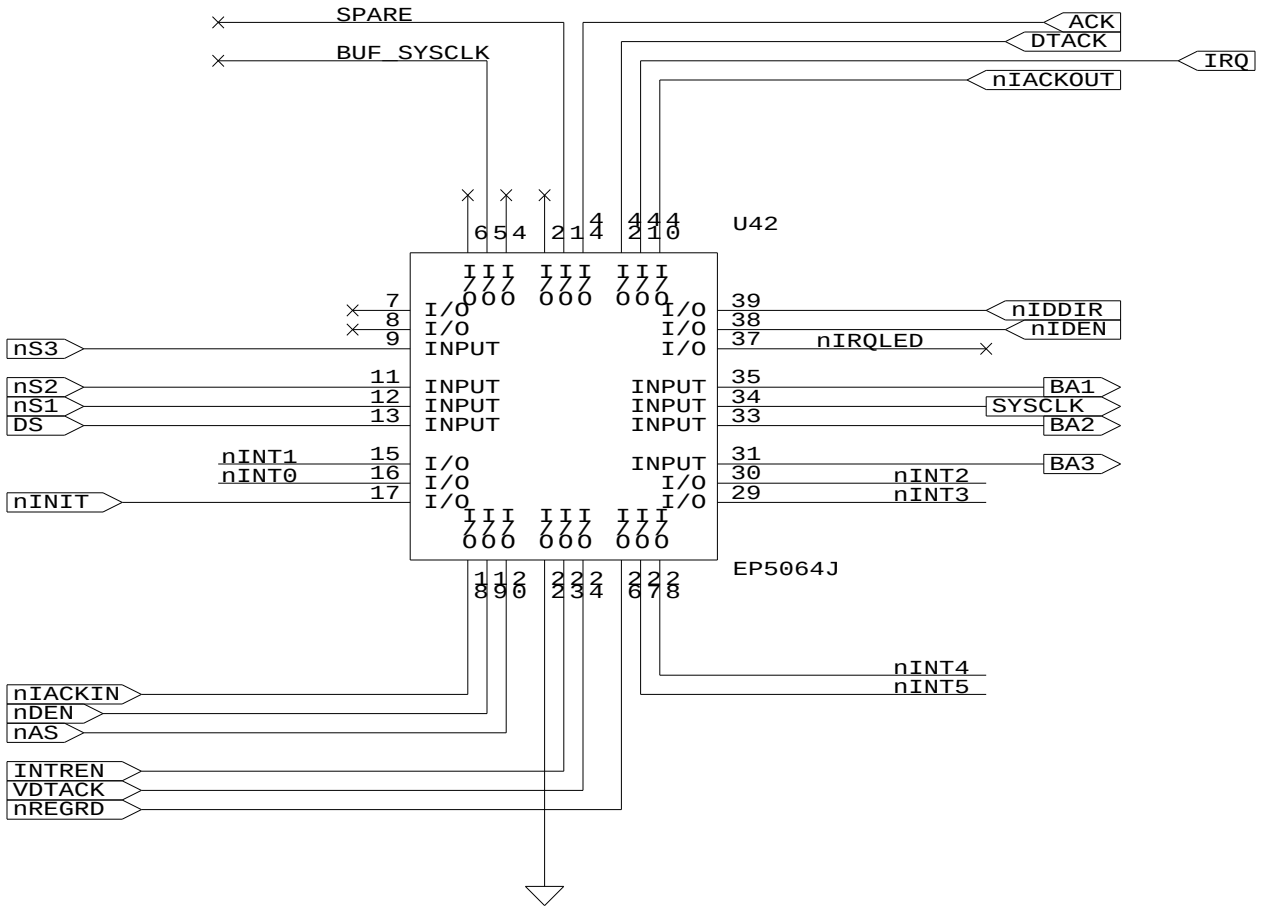

Accelerator Systems Division Advanced Photon Source Argonne National Laboratory		
Title: VME INTERRUPTER B		
Size: A	Document Number: INTRUPTB.SCH	REV: C
Date: March 10, 1994	Sheet 11 of 21	

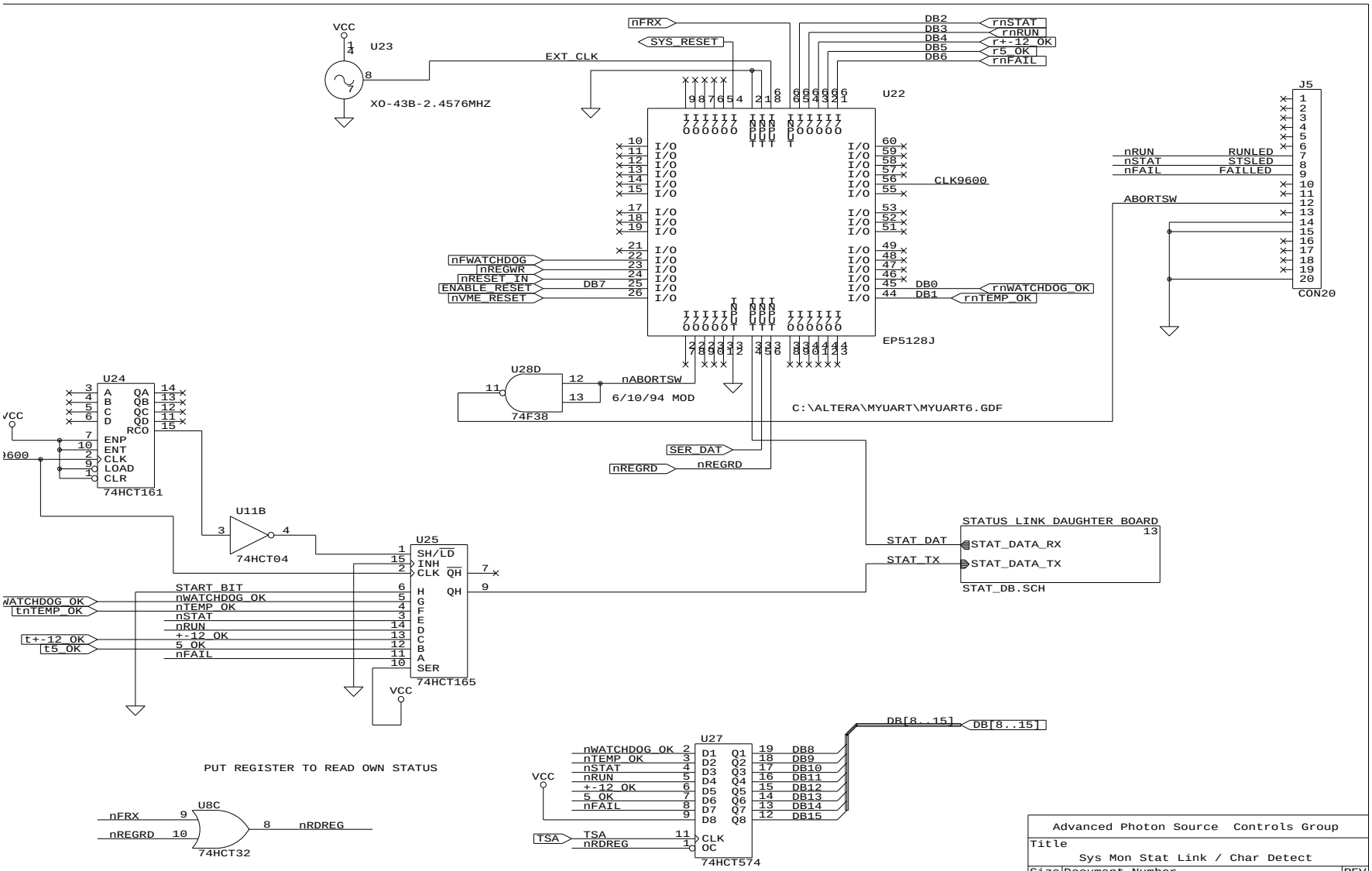
VCC
U23
XO-43B-2.4576MHZ
EXT_CLK
nFRX
SYS_RESET
DB2
DB3
DB4
DB5
DB6
rnSTAT
rnRUN
r+-12_OK
r5_OK
rnFAIL
U22
EP5128J
CLK9600
nFWATCHDOG
nREGWR
nRESET_IN
ENABLE_RESET
nVME_RESET
DB7
DB0
DB1
rnWATCHDOG_OK
rnTEMP_OK
J5
CON20
nRUN
nSTAT
nFAIL
RUNLED
STSLED
FAILLED
ABORTSW
U28D
74F38
nABORTSW
6/10/94 MOD
C:\ALTERA\MYUART\MYUART6.GDF
SER_DAT
nREGRD
U24
74HCT161
U11B
74HCT04
U25
74HCT165
START_BIT
nWATCHDOG_OK
nTEMP_OK
nSTAT
nRUN
+-12_OK
5_OK
nFAIL
STATUS_LINK_DAUGHTER_BOARD
STAT_DAT
STAT_TX
STAT_DATA_RX
STAT_DATA_TX
STAT_DB.SCH
PUT REGISTER TO READ OWN STATUS
U8C
74HCT32
nRDREG
U27
74HCT574
TSA
DB[8..15]
Advanced Photon Source Controls Group
Title
Sys Mon Stat Link / Char Detect
Size B
Document Number STAT_CHR.SCH
REV D
Date: March 20, 1995
Sheet 12 of 21

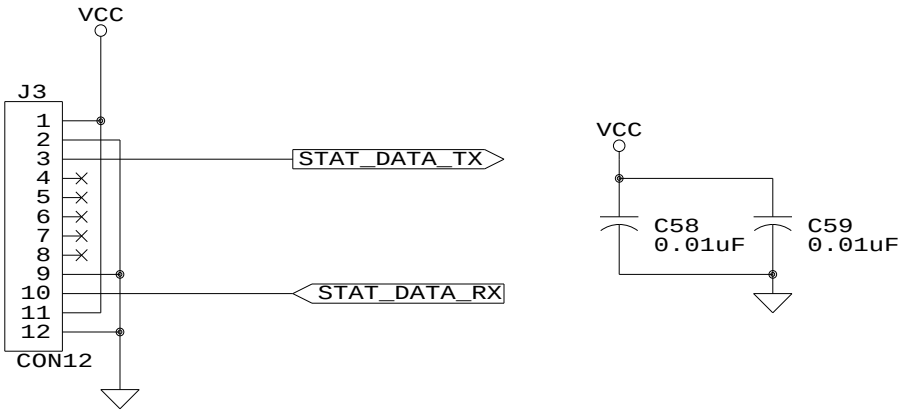

STATUS LINK
TRANSCEIVER DAUGHTER BOARDS
FIBER OPTIC OR ELECTRICAL

Advanced Photon Source - Controls Group Argonne National Laboratory 9700 South Cass Avenue Argonne, IL 60517		
Title STATUS LINK DAUGHTER BOARD CONNECTOR		
Size A	Document Number STAT_DB.SCH	REV C
Date: March 10, 1994	Sheet 13 of 21	

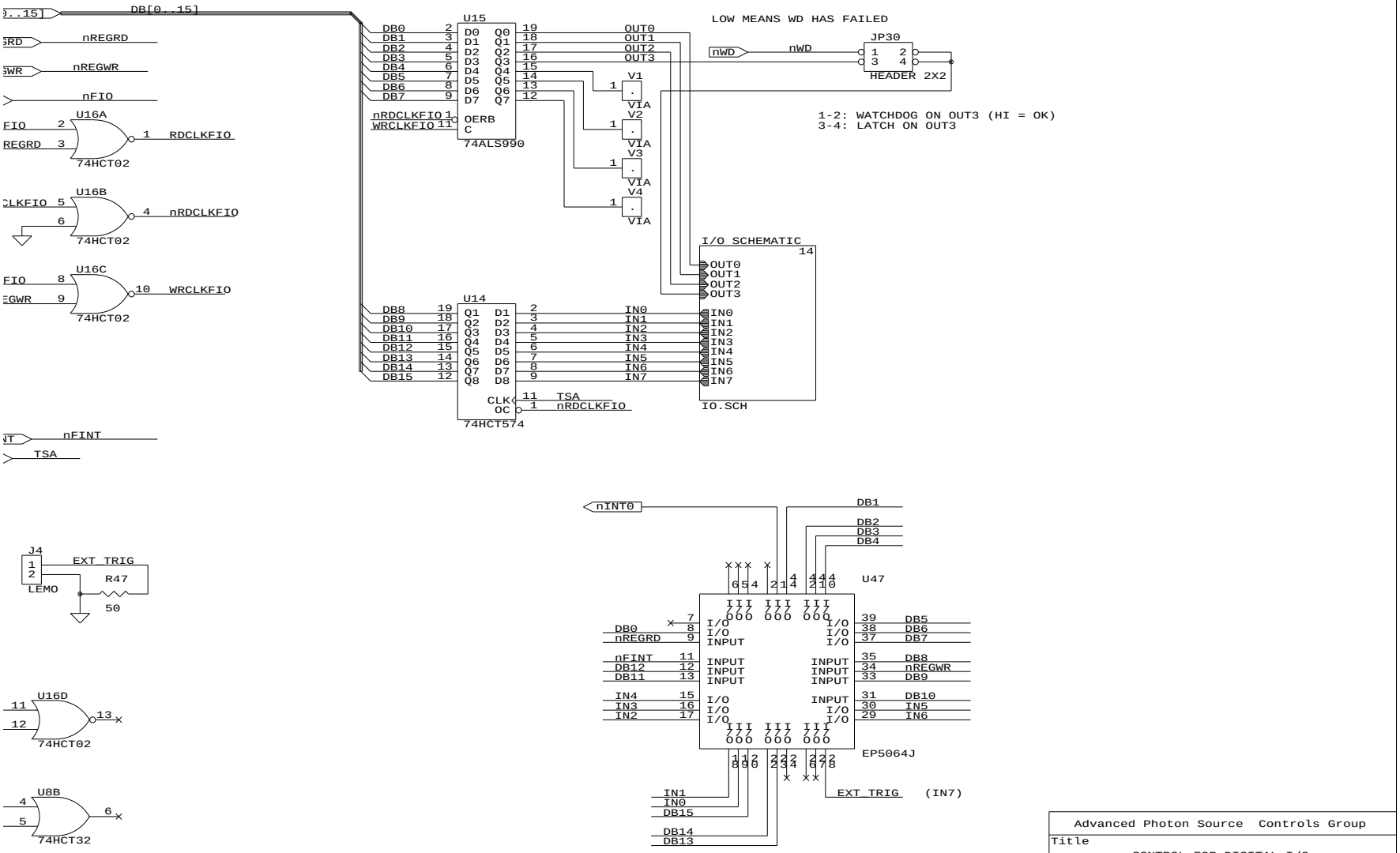

C:\ALTERA\SYSMON2\INTMASK.GDF

Advanced Photon Source Controls Group		
Title: CONTROL FOR DIGITAL I/O		
Size: B	Document Number: DIGIO.SCH	REV: D
Date: May 17, 1994	Sheet 14 of 21	

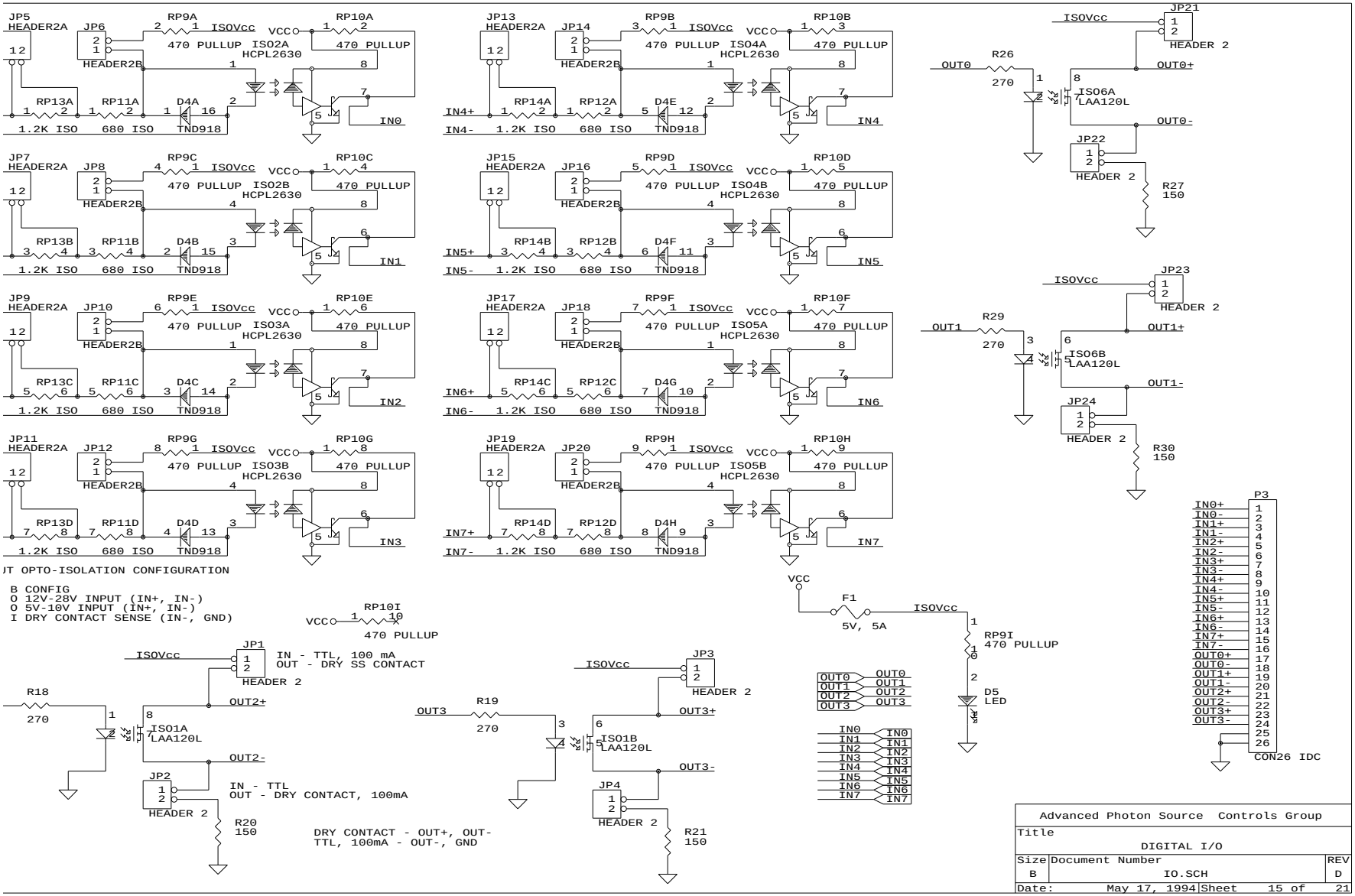
JP5 HEADER2A
JP6 HEADER2B
RP9A ISOVcc
RP10A
470 PULLUP ISO2A
HCPL2630
470 PULLUP
RP13A RP11A D4A
1.2K ISO 680 ISO TND918
IN0
JP13 HEADER2A
JP14 HEADER2B
RP9B ISOVcc
RP10B
470 PULLUP ISO4A
HCPL2630
470 PULLUP
IN4+ IN4-
RP14A RP12A D4E
1.2K ISO 680 ISO TND918
IN4
JP7 HEADER2A
JP8 HEADER2B
RP9C ISOVcc
RP10C
470 PULLUP ISO2B
HCPL2630
470 PULLUP
RP13B RP11B D4B
1.2K ISO 680 ISO TND918
IN1
JP15 HEADER2A
JP16 HEADER2B
RP9D ISOVcc
RP10D
470 PULLUP ISO4B
HCPL2630
470 PULLUP
IN5+ IN5-
RP14B RP12B D4F
1.2K ISO 680 ISO TND918
IN5
JP9 HEADER2A
JP10 HEADER2B
RP9E ISOVcc
RP10E
470 PULLUP ISO3A
HCPL2630
470 PULLUP
RP13C RP11C D4C
1.2K ISO 680 ISO TND918
IN2
JP17 HEADER2A
JP18 HEADER2B
RP9F ISOVcc
RP10F
470 PULLUP ISO5A
HCPL2630
470 PULLUP
IN6+ IN6-
RP14C RP12C D4G
1.2K ISO 680 ISO TND918
IN6
JP11 HEADER2A
JP12 HEADER2B
RP9G ISOVcc
RP10G
470 PULLUP ISO3B
HCPL2630
470 PULLUP
RP13D RP11D D4D
1.2K ISO 680 ISO TND918
IN3
JP19 HEADER2A
JP20 HEADER2B
RP9H ISOVcc
RP10H
470 PULLUP ISO5B
HCPL2630
470 PULLUP
IN7+ IN7-
RP14D RP12D D4H
1.2K ISO 680 ISO TND918
IN7
JT OPTO-ISOLATION CONFIGURATION
B CONFIG
O 12V-28V INPUT (IN+, IN-)
O 5V-10V INPUT (IN+, IN-)
I DRY CONTACT SENSE (IN-, GND)
RP10I
470 PULLUP
VCC
F1
5V, 5A
ISOVcc
RP9I
470 PULLUP
D5
LED
JP21 HEADER 2
R26
270
OUT0
ISO6A
LAA120L
OUT0+
OUT0-
JP22 HEADER 2
R27
150
JP23 HEADER 2
R29
270
OUT1
ISO6B
LAA120L
OUT1+
OUT1-
JP24 HEADER 2
R30
150
P3
CON26 IDC
JP1 HEADER 2
IN - TTL, 100 mA
OUT - DRY SS CONTACT
R18
270
ISO1A
LAA120L
OUT2+
OUT2-
JP2 HEADER 2
IN - TTL
OUT - DRY CONTACT, 100mA
R20
150
JP3 HEADER 2
R19
270
OUT3
ISO1B
LAA120L
OUT3+
OUT3-
JP4 HEADER 2
R21
150
DRY CONTACT - OUT+, OUT-
TTL, 100mA - OUT-, GND
OUT0 OUT1 OUT2 OUT3
IN0 IN1 IN2 IN3 IN4 IN5 IN6 IN7
Advanced Photon Source Controls Group
Title
DIGITAL I/O
Size B
Document Number IO.SCH
REV D
Date: May 17, 1994
Sheet 15 of 21

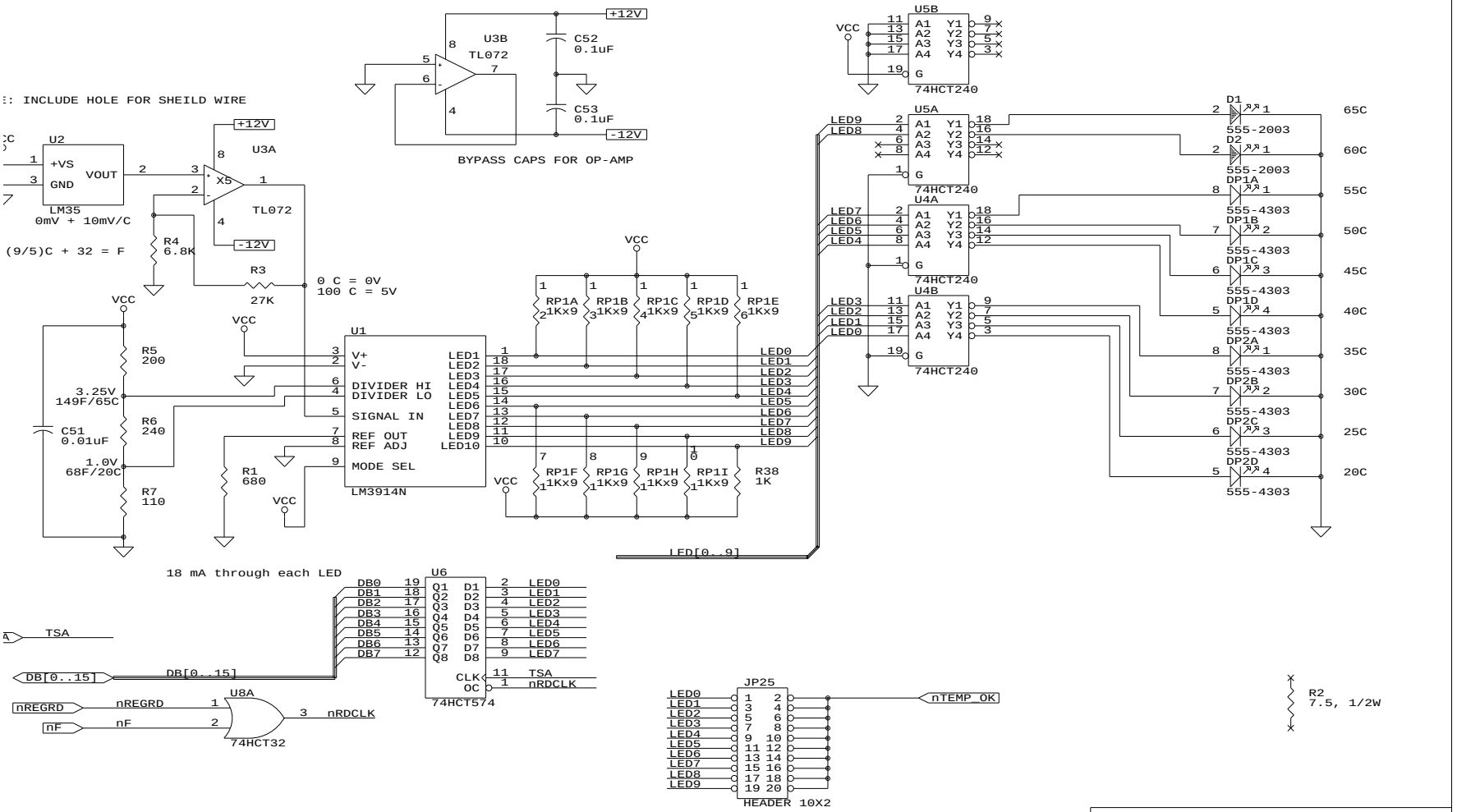

Advanced Photon Source - Controls Group
Argonne National Laboratory
9700 South Cass Avenue
Argonne, IL 60517

Title	TEMPERATURE MONITOR	
Size: B	Document Number: TEMPMON.SCH	REV: C
Date: March 10, 1994	Sheet 16 of 21	

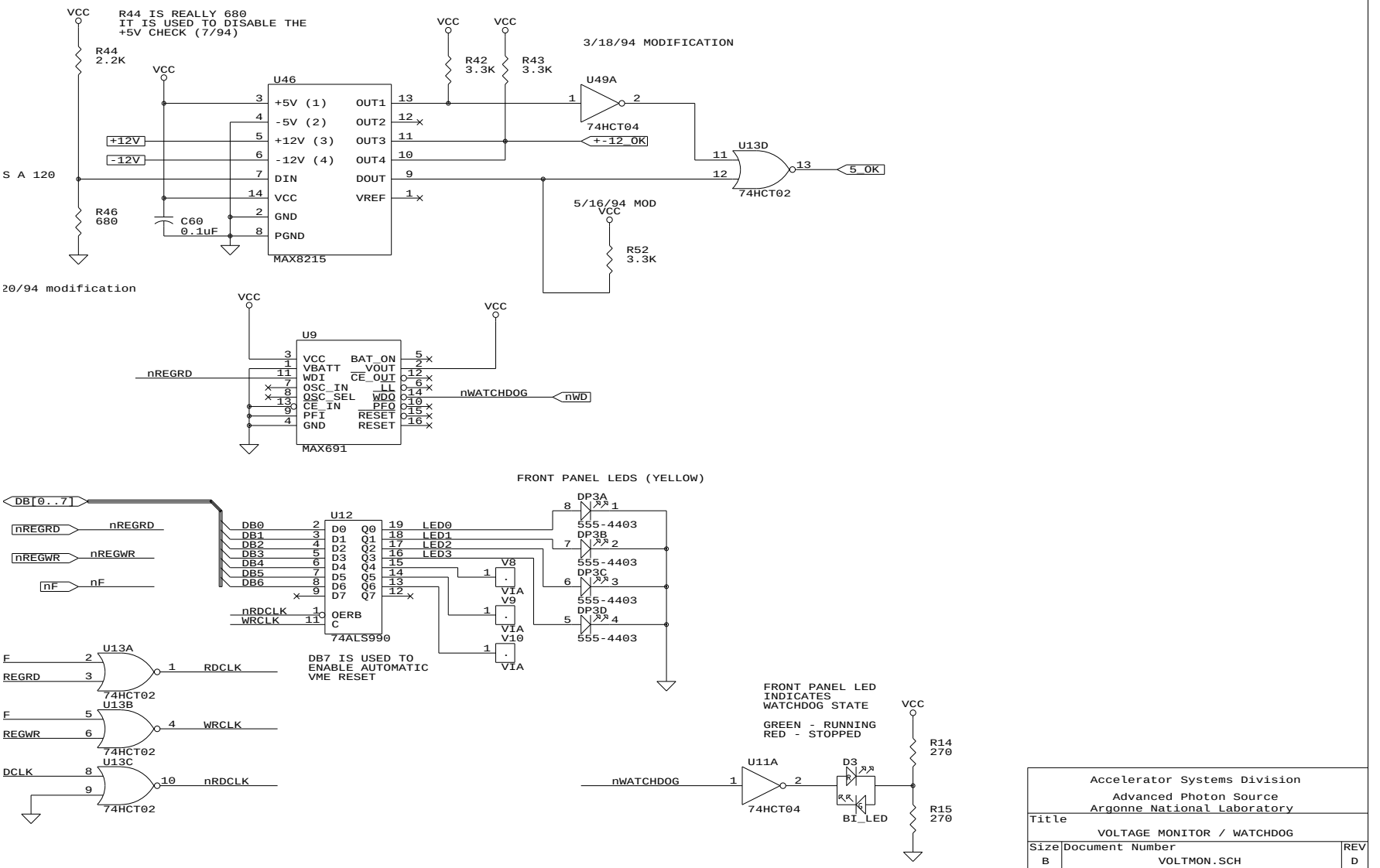

Accelerator Systems Division Advanced Photon Source Argonne National Laboratory		
Title: VOLTAGE MONITOR / WATCHDOG		
Size: B	Document Number: VOLTMON.SCH	REV: D
Date: October 21, 1994	Sheet 17 of 21	

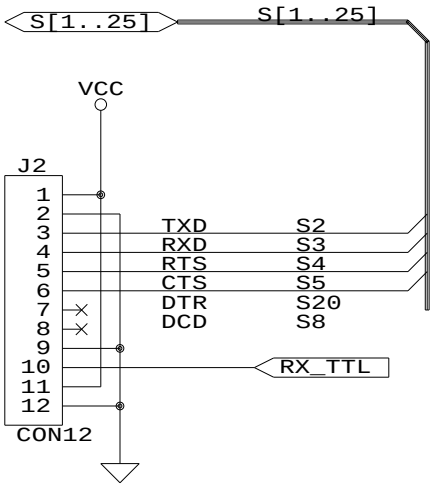

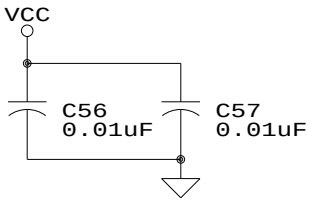

SERIAL PORT
TRANSCEIVER DAUGHTER BOARDS
FIBER OPTIC OR ELECTRICAL

Advanced Photon Source - Controls Group

Argonne National Laboratory
9700 South Cass Avenue
Argonne, IL 60517

Title: SERIAL PORT DAUGHTER BOARD CONNECTOR		
Size: A	Document Number: SER_DB_A.SCH	REV: C
Date: March 10, 1994	Sheet 18 of 21	

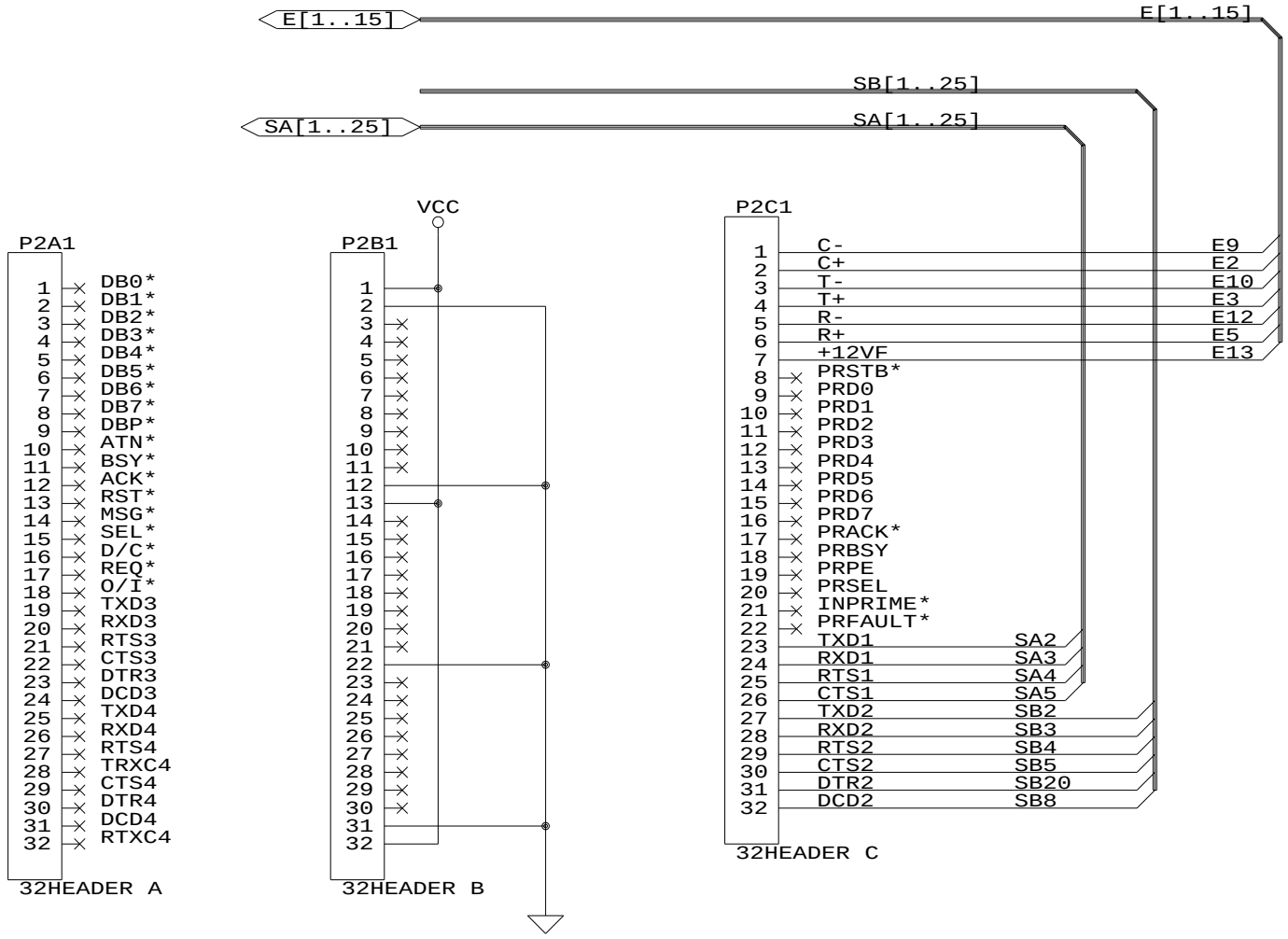

Advanced Photon Source Controls Group		
Title: P2 CONNECTOR		
Size: A	Document Number: P2.SCH	REV: C
Date: March 10, 1994	Sheet 19 of 21	

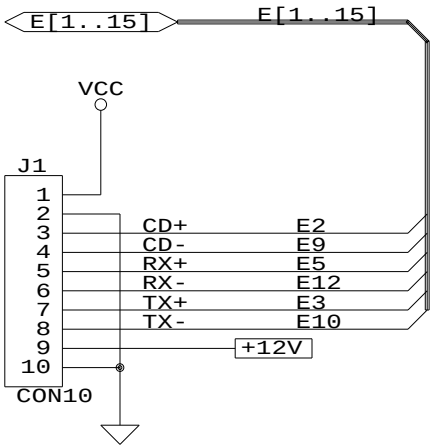

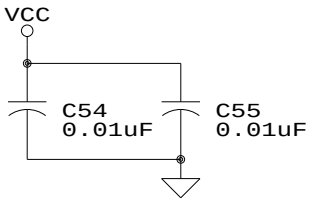

CONNECTOR FOR ETHERNET
TRANSCEIVER DAUGHTER BOARDS

10 BASE-FO OR THINNET

+12V - SOURCE UP TO 500mA
COMMON - SINK UP TO 2A

Advanced Photon Source - Controls Group

Argonne National Laboratory
9700 South Cass Avenue
Argonne, IL 60517

Title		
ETHERNET DAUGHTER BOARD CONNECTOR		
Size: A	Document Number: ENETAUI.SCH	REV: C
Date: March 10, 1994	Sheet 20 of 21	

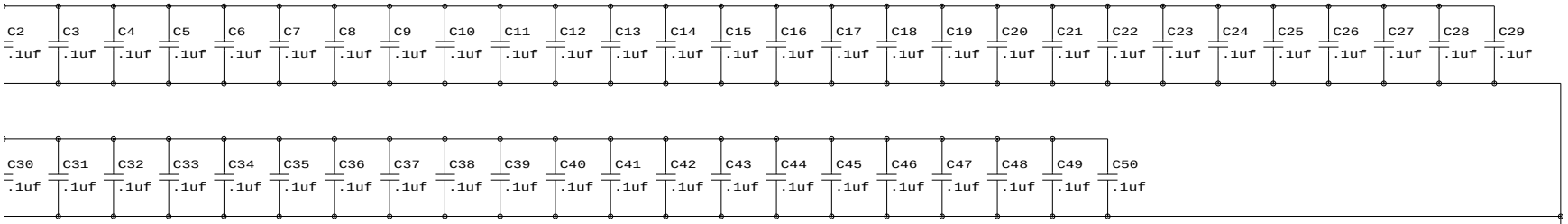

C1
15uf

:E APPLICATION NOTE FOR PLACEMENT OF BYPASS CAPS FOR ALTERA COMPONENTS

Accelerator Systems Division
Advanced Photon Source
Argonne National Laboratory

Title	BYPASS CAPACITORS	
Size B	Document Number BYPASS.SCH	REV C
Date: March 10, 1994	Sheet 21 of 21	

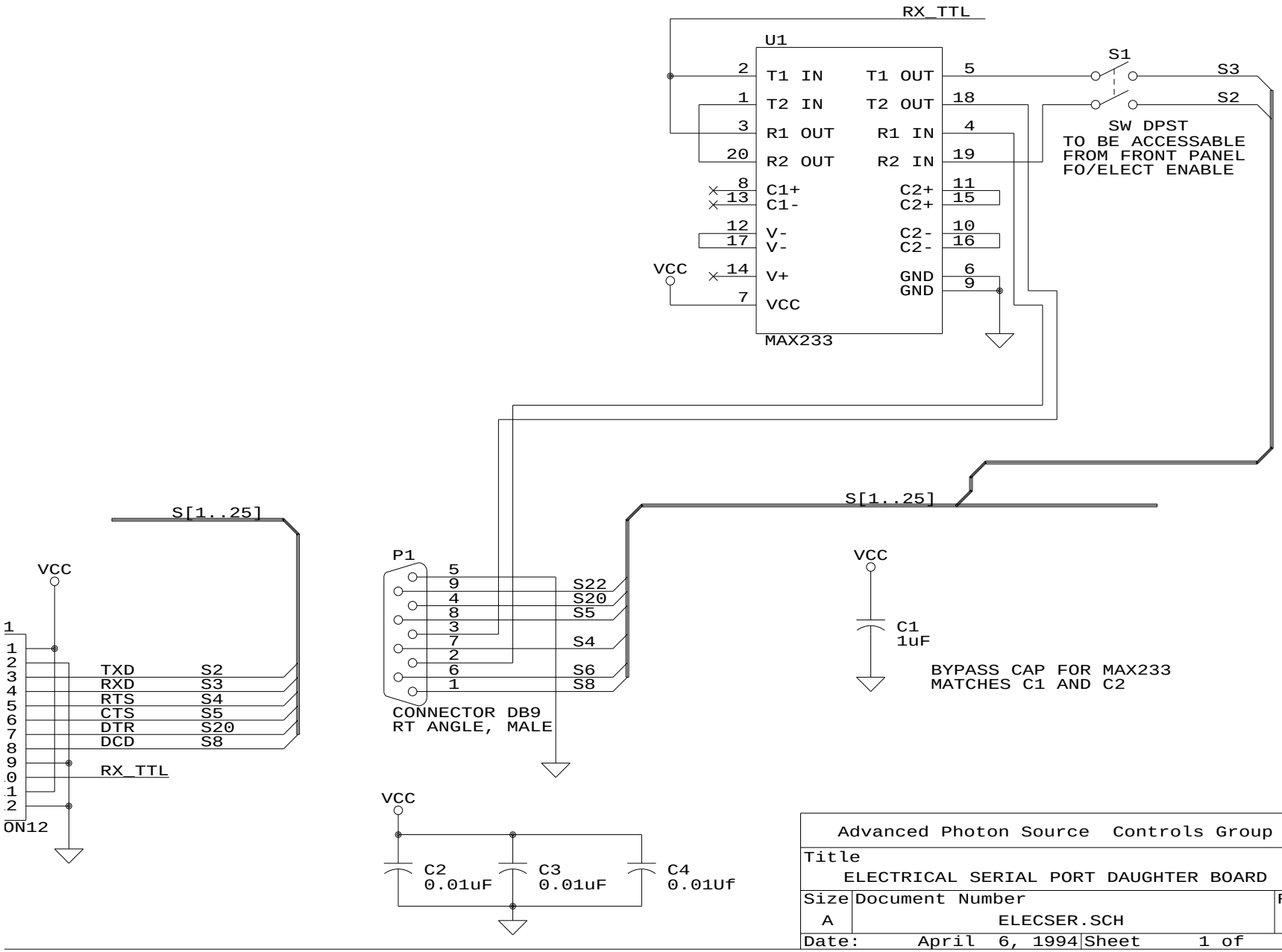

Advanced Photon Source Controls Group		
Title: ELECTRICAL SERIAL PORT DAUGHTER BOARD		
Size: A	Document Number: ELECSER.SCH	REV: A
Date: April 6, 1994	Sheet 1 of 1	

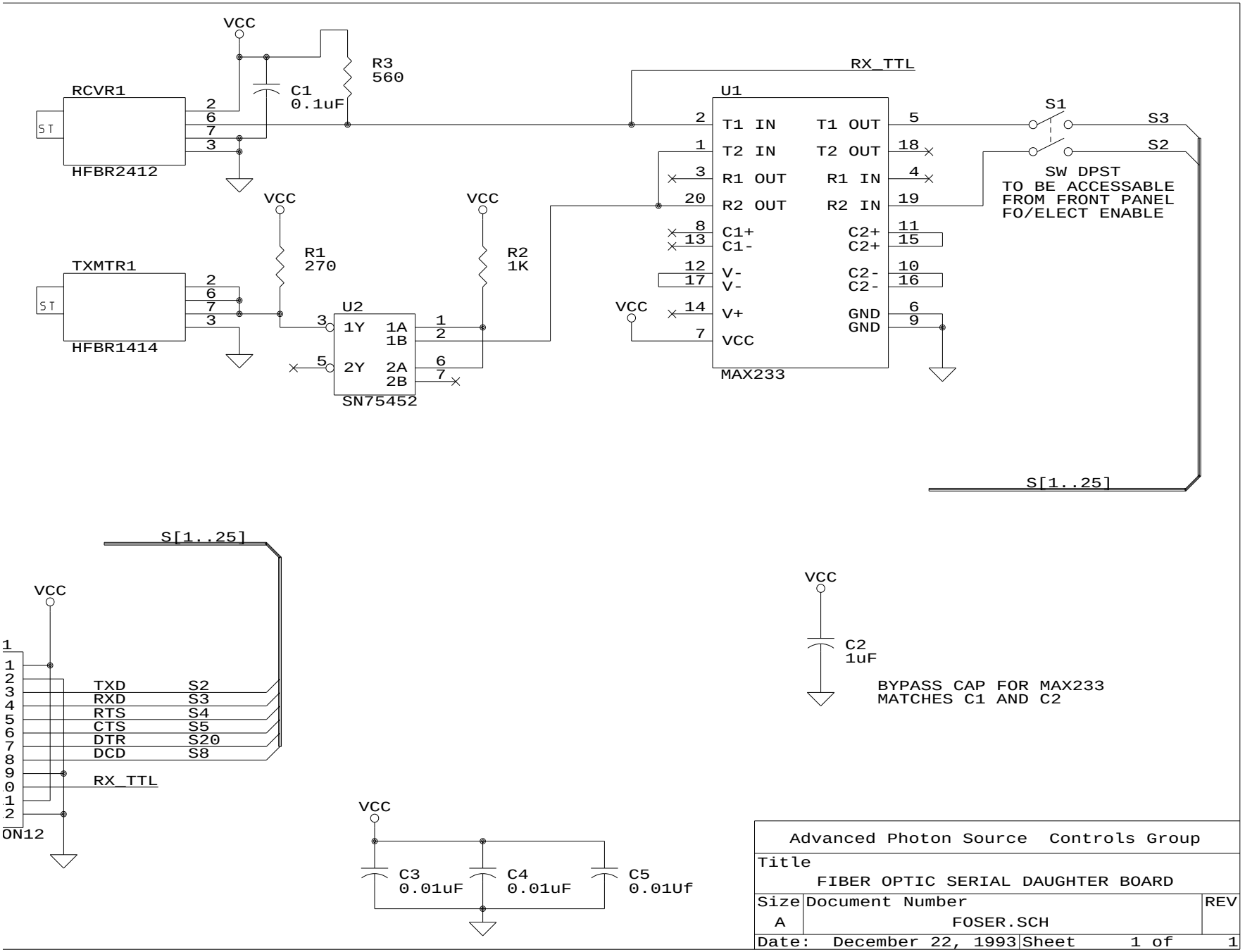

Advanced Photon Source Controls Group		
Title: FIBER OPTIC SERIAL DAUGHTER BOARD		
Size: A	Document Number: FOSER.SCH	REV:
Date: December 22, 1993	Sheet 1 of 1	

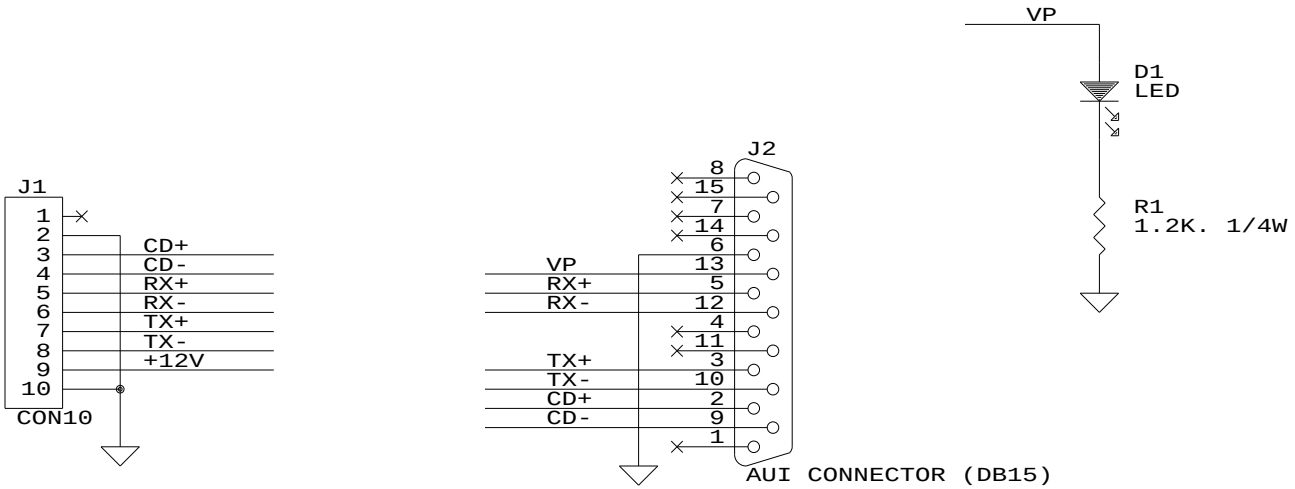

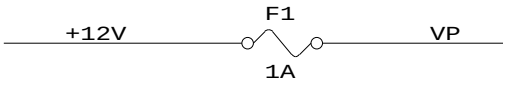

Advanced Photon Source - Controls Group Argonne National Laboratory 9700 South Cass Avenue Argonne, IL 60517		
Title: AUI CONNECTOR		
Size: A	Document Number: AUIENET.SCH	REV:
Date: April 1, 1994	Sheet 1 of 1	