Trade Studies for SNAP secondary Mirror Metering Structure

Eric Ponslet
08/10/2000

	Name:	Phone & E-mail:	Signature:
Main Author:	Eric Ponslet	(505) 662-7329 ponslet@hytecinc.com	
Approved:			

Abstract

Support structures for the secondary mirror assembly in SNAP require high stiffness, ultra-high dimensional stability, and minimum obstruction of the telescope aperture. This note summarizes a conceptual design trade study that explores various structural concepts in terms of their relative stiffness, obscuration and diffraction merit, as well as technical complexity and risk. The effects of variations in two key and presently unsettled design parameters (mass of secondary mirror assembly, and primary to secondary mirror separation) are also explored for each option through systematic 2-dimensional trend analyses.

Design Engineering
Advanced Composite Applications
Ultra-Stable Platforms

110 Eastgate Dr.
Los Alamos, NM 87544

Phone 505 661 3000
Fax 505 662 5179
www.hytecinc.com

Revision Log

Rev.	Date	Author(s)	Summary of Revisions/Comments
-	08/10/00	E. Ponslet	Initial release.

Table of Contents

1. Definitions and Notations

SMA	Secondary Mirror Assembly, which includes the mirror itself, the baffle, structural elements, actuators, etc.
POB	Primary Optics Bench, the large stable platform that supports the primary mirror assembly and forms the backbone of the instrument.
M	Mass of SMA.
OD, ID	Outside Diameter and Inside Diameter of a circular tube.
n	number of primary support members (i.e. all members that define the obscuration pattern).
E, r	Young's modulus and specific mass of the strut material.
D, t, D_o	Mean diameter, wall thickness, and outside diameter of a tubular strut/beam.
$\propto$	Proportional to.
Al/GFRP	Composite of Aluminum alloy and Graphite Fiber Reinforced Plastic.
HST	Hubble Space Telescope.
Strut	A long structural element *primarily* intended to carry traction/compression forces along its axis. Although struts are classically pinned at their ends, we also use that term for traction/compression members with fixed (built-in) ends, where bending loads may develop but are not the primary load carrying mechanism.
Beam	A long structural element also intended to carry loads transverse to its axis, through bending and shear. A beam has at least one end fixed (built-in). In this study, beams will always have both ends fixed.
Truss	A 3-dimensional assembly of struts that carries (or is capable of carrying) loads primarily through traction/compression its struts and without *relying* on their bending stiffness. A 3-D truss must have at least 6 struts.
Frame	A 3 dimensional assembly of beams that carries loads - at least partially - through transverse loading of its beams.

2. Background and Introduction

In a first round of conceptual design analyses published on 04/25/00[2], we presented and compared four alternative structural concepts for the secondary mirror assembly support structures. Since then, work has been performed to establish baseline design requirements for the SNAP instrument[1]. As a result of this work, a number of changes and additional requirements have been included. The main changes are:

- The baseline mass of the SMA was reduced from an earlier estimate of 50kg to 22kg as indicated in [1].
- A goal of 5%[1] was set for the percentage obscuration caused by the SMA support structure.
- A new design goal of minimizing the number of interference spikes caused by support structures obscuring the primary mirror aperture was introduced[1].
- Assumed material properties for a hypothetical Al/GFRP high stability composite were modified slightly (see Section 4.1 below).

With those new assumptions and goals, the concepts presented in [2] were re-designed, and a number of additional concepts and variations were introduced. All concepts were also analyzed for trends as a function of two key design parameters: the mass of the SMA, and the primary-secondary mirror separation. The results of these conceptual design efforts are summarized here. Although this study does not claim to be exhaustive, it should provide a useful cross-section of the design space and allow the SNAP collaboration to make an initial selection of one or a couple of preferred design approaches.

3. Assumptions

Most system parameters and design requirements used in this study are documented in [1]. In addition, the following assumptions were made:

- for the purpose of approximate trend studies, it is assumed that the mass of the support/metering structure is small compared to that of the SMA.
- with a secondary mirror diameter of 0.4m[1], the outside diameter of the SMA is assumed equal to 0.5m.
- attachment points for the SMA support members are assumed to lie on a circle of diameter 2.2m, concentric with the 2m primary mirror.
- the baseline distance from the primary to the secondary mirror is set to 2.4m[1].
- it is assumed that the telescope is built around an extremely stiff and dimensionally stable primary optical bench, positioned immediately behind the primary mirror.
- tubular, untapered composite struts with circular cross-section are assumed for all concepts.
- the masses of tube end-fittings are *not* included in any of the models. The summary table at the end of this document shows non-negligible fitting masses for those designs with large diameter tubes. Designs where the mass of fittings is not small compared to the mass of the SMA (22kg) would require further stiffening to achieve 35Hz modes. This is a preliminary design issue that is not adressed here.
- the minimum required safety factor relative to buckling under quasi-static launch accelerations was arbitrarily set to 2.

4. Design of Tubular Composite Struts and Beams

4.1 Material Properties

In our earlier study[2], the specific mass of the hypothetical Al/GFRP layered composite used for all elements of the SMA support structure was assumed to be 1800kg/m^3. A more realistic number of 2226kg/m^3 is used here, accounting for the higher density of the aluminum layers used to achieve near-zero longitudinal CTE. The material properties assumed throughout this study are:

$$E = 250\,\text{GPa},\ \rho = 2226\,\text{kg/m}^3$$

The effect of variations in these two material properties on the designs can be estimated from the trend equations of the next few sections.

4.2 Violin Modes

An important requirement for the SNAP structures is that all components and subsystems should have fundamental frequencies of vibration greater than or equal to 35Hz[1]. Slender struts and beams connecting two relatively massive subsystems (like the struts and beams connecting the 22kg SMA to the rest of the instrument) have characteristic "*violin*" modes in which they vibrate transversely about their ends. The ends are essentially fixed points in space as long as the mass of the strut/beam itself is small compared to the objects it connects. For tubular struts or beams with circular cross-section, the frequency of the first violin mode is independent of the wall thickness and the 35Hz requirement reduces to a minimum diameter constraint.

4.2.1 Pinned-Pinned End Conditions

The first violin frequency of a pinned-pinned strut is

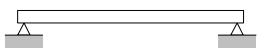

$$f_{pp}(\text{Hz}) \approx \frac{0.56}{L^2}\sqrt{\frac{E}{\rho}}D \propto E^{0.5}\rho^{-0.5}D^1L^{-2}, \qquad (1)$$

where L is the length of the strut.

For E = 250GPa, ρ = 2226kg/m^3, and $f_{pp} \geq$ 35Hz, this provides a minimum diameter constraint

$$D_{pp} \geq 0.00595L^2, \qquad (2)$$

where D should be interpreted as the *mean* diameter of the tube.

4.2.2 Fixed-Fixed End Conditions

For fixed-fixed end conditions, the first violin frequency is

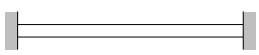

$$f_{ff}(\text{Hz}) \approx \frac{1.26}{L^2}\sqrt{\frac{E}{\rho}}D \propto E^{0.5}\rho^{-0.5}D^1L^{-2}. \qquad (3)$$

For E = 250GPa, ρ =2226 kg/m^3, and $f_{ff} \geq$ 35Hz, this requires a minimum mean diameter of

$$D_{ff} \geq 0.00262L^2. \qquad (4)$$

4.3 Obscuration Ratio

Assuming a 2m primary mirror, 0.5m OD SMA, and that any secondary support members lie entirely in the shadow of the primary members, the percentage obscuration Ω by SMA metering structures with straight radial legs is

$$\Omega(\%) \approx 100\frac{0.75nD_o}{\pi(1^2 - 0.25^2)} = 25.5n(D+t). \qquad (5)$$

With a goal of 5% obscuration, this would limit the outside diameter of the members to approximately 65mm for n=3, 49mm for n=4, 33mm for n=6, and 24mm for n=8. For curved the curved leg design, the actual arc length of the projected leg must be taken into account.

4.4 Structural Modes of Space Trusses and Frames

In the present context, a truss is defined as a 3-dimensional assembly of struts that is capable of reacting translational and rotary inertial loads on the SMA primarily through traction-compression in the struts, and without *relying* on the bending stiffness of the struts. A truss must have a minimum of 6 struts to react the 6 degrees of freedom of the SMA. A structure containing more than 6 struts and/or using built-in connections of the struts to the SMA and/or the base can still be considered a truss as long as the *primary* load transfer mechanism is still traction-compression in the struts, even though the load distribution becomes indeterminate and/or bending may also occur.

In contrast with a truss, a frame *relies* on bendingand/or shear in one or more struts to react at least one degree of freedom of the SMA. At equal mass, frames are structurally less efficient than trusses.

Note of course that a given structure may behave primarily as a truss in some modes of deformation and primarily as a frame in other modes. This must be recognized and taken into account in trend analyses.

In this report truss and frame modes (in which there is significant motion of the SMA) will sometimes be referred to a *global* modes, to distinguish them from *violin* modes of individual legs, which do not induce significant motion of the SMA.

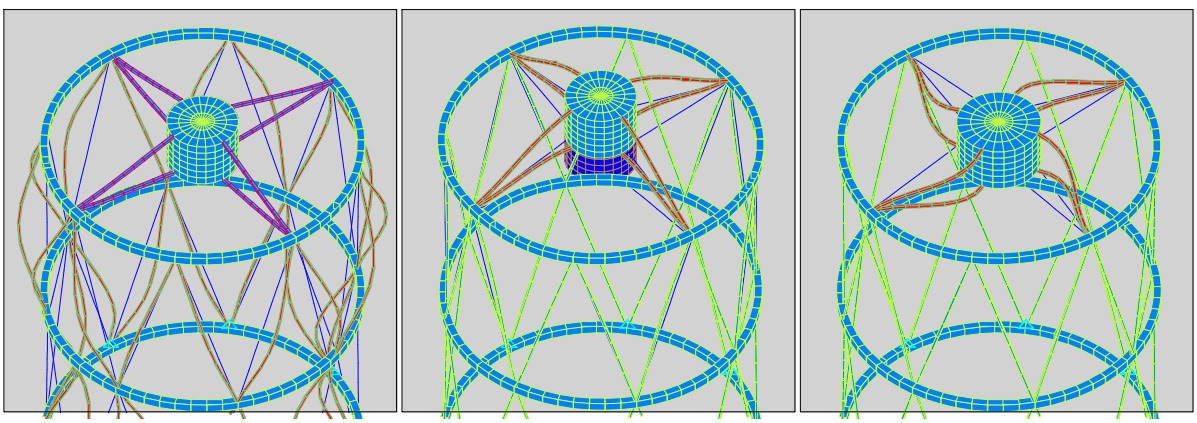

Figure 1: three different types of modes of the same structure: left to right, a violin mode of the struts of the cylindrical truss, a global plunge truss mode of the SMA spider (spider legs primarily in tension/compression), and a global yaw frame mode of the SMA spider (spider legs in bending).

4.4.1 Truss modes

Because traction/compression is the primary load transfer mechanism, the natural frequency f_T of a truss mode is determined by the axial stiffness of the members involved:

$$f_T \propto \sqrt{\frac{EDt}{LM}} \propto E^{0.5} D^{0.5} t^{0.5} M^{-0.5} L^{-0.5} \qquad (6)$$

4.4.2 Frame modes

The natural frequency f_F of a frame mode is controlled by the bending stiffness of the beams involved in that mode, or:

$$f_F \propto \sqrt{\frac{ED^3t}{L^3M}} \propto E^{0.5}D^{1.5}t^{0.5}M^{-0.5}L^{-1.5} \qquad (7)$$

4.5 Buckling in Metering Trusses and Frames

Since a number of the concepts presented in this note involve trusses and frames with long, slender tubular members, some of whom react the launch accelerations in compression, safety against buckling must be evaluated. However, it must be recognized that the members are at the same time required to have a first violin mode at or above 35Hz. Once that condition is imposed, a longer and/or a pinned-pinned member automatically is automatically designed with a much larger diameter than a shorter and/or fixed-fixed member (equations 2 and 4) so that its lowest violin mode remains at or above 35 HZ. In those conditions, one makes somewhat unusual conclusions about the trends of safety against buckling (details are given below):

- if designed for a 35Hz violin mode, the safety factor against buckling actually *increases* for longer struts (i.e. a greater separation between primary and secondary mirrors).
- if both are designed for a 35Hz violin mode, a pinned-pinned member is actually *safer* relative to buckling than a fixed-fixed member.
- for the range of designs considered in this study and the launch accelerations defined in [1], buckling is not a critical design requirement.

Details for pinned-pinned and fixed-fixed tubular members are given in the next two sections.

4.5.1 Pinned-Pinned

Assuming Euler buckling of perfect pinned-pinned columns, the safety factor against buckling of primary struts is approximately

$$SF_{pp} = \frac{P_{pp}^{CR}}{P} = \frac{\pi^2 nEI}{MpgL^2}, \qquad (8)$$

where n is the number of primary struts sharing the load, and p is an effective load factor during launch (which in principle accounts for the effects of axial and transverse load factors and the structural configuration).

If we assume that the pinned-pinned strut is already designed for a first violin mode at 35 Hz, this reduces to (combining equations 1 and 8):

$$SF_{pp}\Big|_{\text{35Hz violin}} \geq \propto \frac{nL^4t}{M}. \qquad (9)$$

Note that equation (9) gives a *minimum* safety factor against buckling; if the diameter of the member is larger than the violin minimum given by (2) (for example because a global mode was more critical), then the safety factor for buckling is larger than that given by (9). Also, note

that equation (9) shows that the buckling safety factor *increases* very rapidly for longer members. In other words, shorter members or metering structures are more likely to be buckling critical than longer ones (because of the 35 Hz violin mode requirement).

4.5.2 Fixed-fixed

With the same assumptions, the buckling safety factor for a frame of fixed-fixed members is approximately

$$SF_{ff} = \frac{P_{ff}^{CR}}{P} = \frac{4\pi^2 nEI}{MpgL^2}, \tag{10}$$

or four times larger than that of a pinned-pinned strut of the same dimensions. However, if we assume that the beams are already designed for a first violin mode at 35 Hz or higher, this reduces to

$$SF_{ff}\Big|_{\text{35Hz violin}} \geq \propto \frac{1}{2.9}\frac{nL^4 t}{M}, \tag{11}$$

and the same remarks as in Section 4.5.1 can be made.

5. Conceptual Design Options

A number of concepts were considered for the SMA metering structure. They are presented in the following sections.

For each concept, the diameters of the members were minimized while maintaining a first natural frequency of 35Hz. For all but one design, the wall thickness was - somewhat arbitrarily - set to 1mm (a practical value for composite tubes in the 10mm to several tens of mm diameter). Approximate hand calculations were generally used to establish initial values for the diameters of the various support members. Simple finite element models of the structures were then used to fine-tune those diameters to achieve the 35Hz requirement for all modes of the structure. The same models were used to perform buckling and stress analyses under launch acceleration loads. Neither buckling or stress level was found critical in any of the designs. In cases where the buckling safety factors were less than about 20, buckling limits were included in the trend analyses since parameter variations affect these safety factors. Stress levels were always found to be very low and those limits were therefore never considered in trend analyses.

Note that the trend curves and surfaces included for the various designs are of course approximate. They rely on simplifying assumptions such as viewing individual vibration modes as either pure truss or pure frame modes. In reality, all modes have stiffness contributions from both truss- and frame-like mechanisms. For the designs included here however, the simplified trends were found to give very good results in most cases.

5.1 Direct Support Truss Concepts

Direct support trusses have a number of advantages:

- simplicity, small number of members.
- supports SMA directly off the periphery of the POP.

- stiffness from traction/compression in struts, and the ensuing predictability and ease of modeling.

5.1.1 Hexapod with Pinned-Pinned Legs

From the mass point of view, this is the most efficient option. It is also a "true" *kinematic* support truss, which makes assembly and alignment simpler and avoids assembly stresses by not over-constraining the SMA. The hexapod of [2] was modified to reduce the number of interference branches from 12 to 6 by rearranging the attachment points around the primary mirror. This change results in a slight loss in structural efficiency (15% reduction in frequency of lowest truss mode) but does not affect the strut design because it is driven by the violin constraint.

If we assume pinned-pinned end conditions, the violin constraint requires 47mm mean diameter for the struts. Assuming a 1mm wall thickness this give 48mm OD and 7.3% obscuration, or 50% above the 5% design goal. All the lowest modes are various combinations of violin modes of the struts starting at 35.6Hz; the lowest global truss mode (involving significant motion of the SMA) occurs at 56Hz. The design is illustrated in Figure 2.

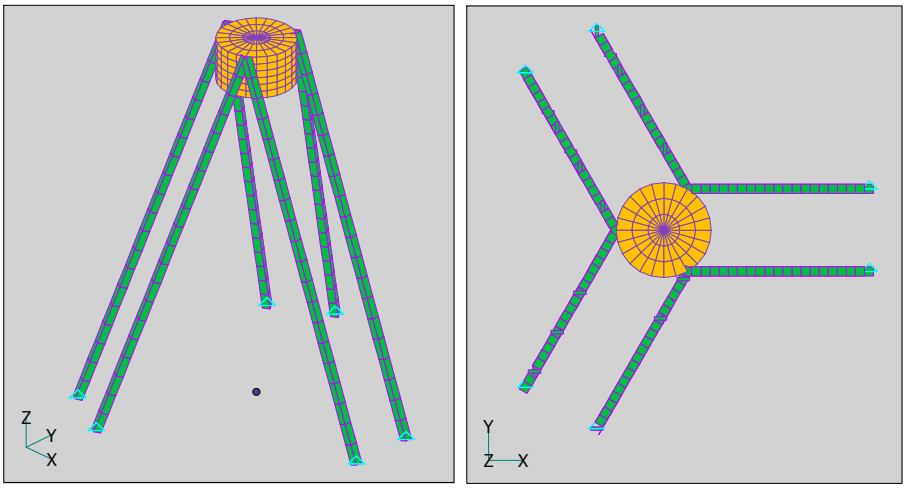

Figure 2: hexapod truss with 48mm OD pinned-pinned tubular struts; fundamental mode: 35.6Hz (violin); obscuration: 7.3%.

Trends for this design are shown in Figure 3. As indicated above, the violin constraint is by far the most critical one, and as can be seen in the figure, it remains critical across the design space. Because the violin mode is independent of the mass of the SMA (as long as it is large compared to the mass of the struts), this parameter has no effect on the design. The wall thickness also has no effect on violin modes, so the only deciding parameter (in addition to mass properties) is the mirror separation.

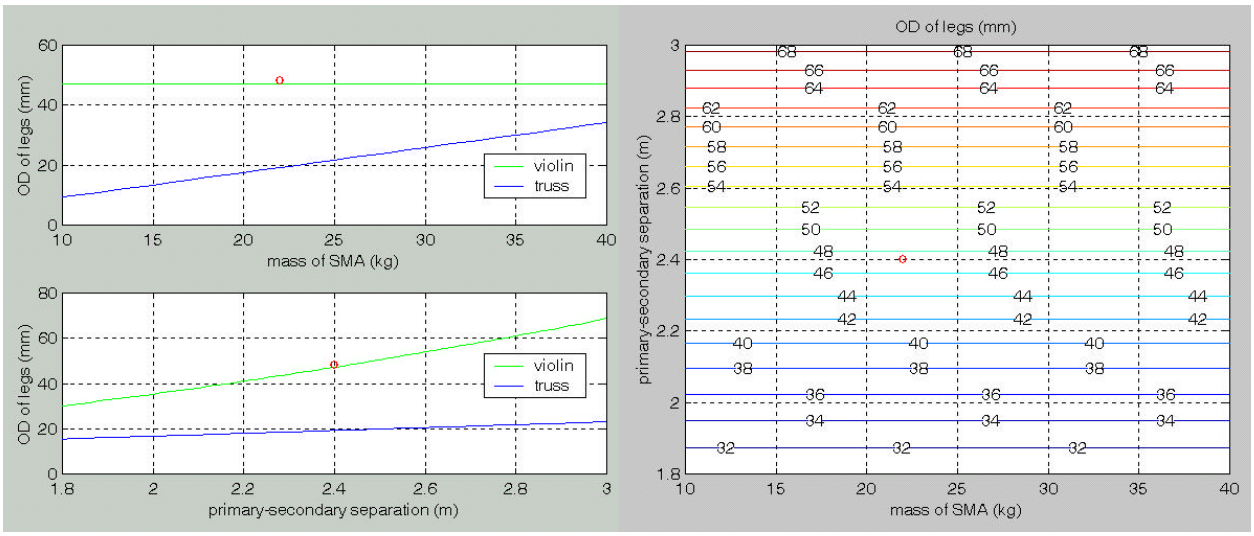

Figure 3: trends of required OD of legs for various mirror separations and SMA masses; nominal point (open red circle) is hexapod truss with 48mm OD pinned-pinned tubular struts; wall thickness is constant at 1.0mm.

5.1.2 Hexapod with Fixed-Fixed Legs

Since violin modes are driving the strut diameter and obscuration, we could consider built-in end conditions for the struts, at the cost of slightly increased complication and technical risk. This could be realized in practice by locking the end fittings (by bonding a sleeve around flexures for example) after completing assembly and alignment with articulated/flexured ends. If we assume near-perfect built in conditions, the violin requirement for the mean diameter drops to about 21mm. This also reduces the axial stiffness of the members and brings the lowest global truss mode very near 35Hz. Because they approach the same frequency, global and violin modes couple with each other producing a coupled mode at a slightly lower frequency and requiring slightly stiffer cross sections to satisfy the 35Hz requirement. Assuming 22mm mean diameter and a 1mm wall, this leads to 23mm OD and 3.5% obscuration, well below our 5% target. FEM simulations still show a number of violin modes near 38Hz and a truss mode at 42Hz, but the fundamental frequency is now from a coupled violin/transverse truss mode at 34.8Hz. That design is shown in Figure 4.

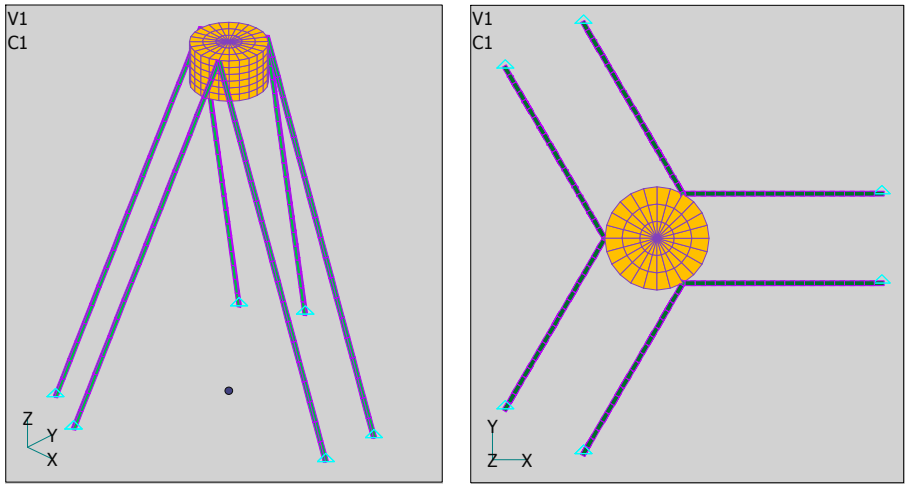

Figure 4: hexapod truss with 23mm OD fixed-fixed tubular struts; fundamental mode: 34.8Hz (coupled violin & transverse); obscuration: 3.7%.

Also note that the trend equation (6) applied to this design would predict that the first global truss mode would drop from 56 to 39Hz when the mean diameter *D* drops from 47 to 23mm, in excellent agreement with the 38Hz FEM result.

In reality, near-perfect built-in end conditions are difficult to achieve for high stiffness tube like the ones considered here. A real structure based on this concept would likely require strut diameters somewhat larger than 23mm. A compromise around 30mm OD would give about 4.6% obscuration. Note also that simple cross-bracing in the shadow of the legs would not eliminate the violin modes since it would only significantly constrain motion in the radial direction.

Figure 5 summarizes what changes to the design of Figure 4 would be required if the mass of the SMA and/or the primary to secondary mirror separation were modified from their current baselines of 22kg and 2.4m. To understand the trends, it must be observed that this design is simultaneously critical for the violin and the global truss mode constraints (and in that sense is somewhat of an optimal design). When a design parameter is changed, one of those two constraints tends to become more critical than the other and dictates the required change in diameter of the members. Looking for example at the upper left chart in Figure 5, we observe that:

- If the mass of the SMA is reduced from its baseline value of 22kg, the required diameter of the struts remains unchanged (green curve) because it is imposed by the violin constraint, which is independent of *M.*
- If on the other hand *M* is increased, the leg diameter must increase because the global truss modes become more critical (blue curve).
- The buckling constraint (requiring a safety factor of at least 2) never becomes critical.

Similar reasoning can be used to understand the effect of the mirror separation. The right hand side of the Figure combines variations of both parameters to provide an approximate trend surface for the required OD of the members as a function of both the SMA mass and the primary-secondary separation distance.

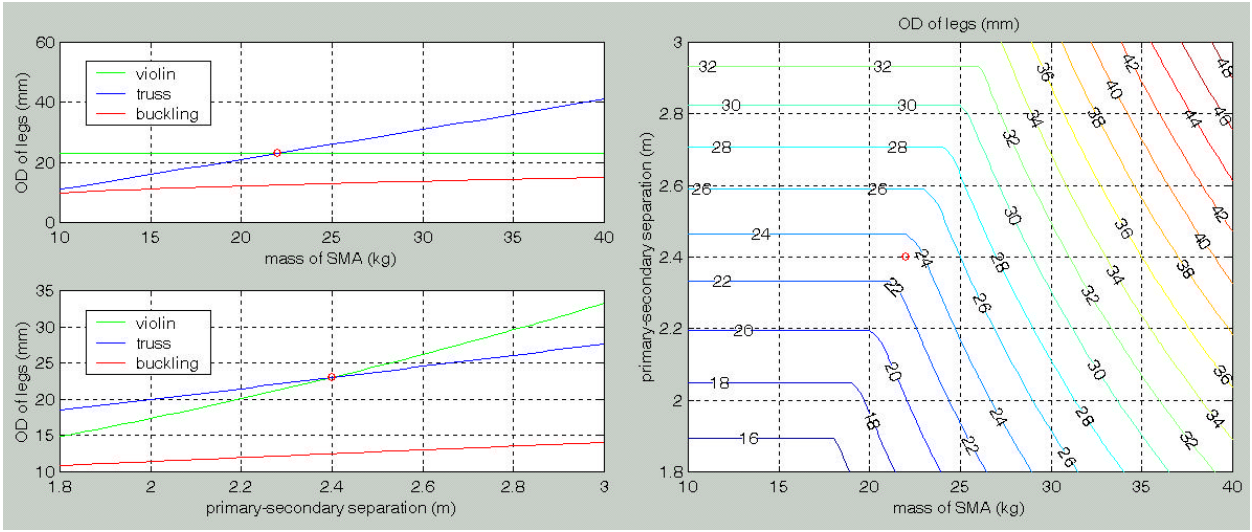

Figure 5: trends of required OD of legs for various mirror separations and SMA masses; nominal point (open red circle) is hexapod truss with 23mm OD fixed-fixed tubular struts; wall thickness is constant at 1.0mm.

5.1.3 Octopod with Pinned-Pinned Legs

The hexapod designs presented in the previous section are structurally optimal support configurations. However, because they involve 3 different projected orientations of struts (0/120/240), they produce interference patterns with 6 spikes. This number can be reduced to 4 by using only 2 orientations (0/90) as can be achieved with an octopod truss. Because of the additional struts, the truss is no longer statically determinate; this introduces new issues with assembly stresses and alignment, making this option less appealing from the mechanical point of view. In addition, since the 6-legged truss was already violin-critical, the eight-legged version will be as well and require at least the same diameter struts, increasing the obscuration ratio.

First, consider an eight-legged truss with pinned-pinned struts. The violin requirement is identical as for the pinned-pinned hexapod, and leads to 48mm OD×1mm wall, and a 9.8% obscuration, twice our design goal. Figure 6 shows that structure. FE models show the first violin mode at 35.5Hz.

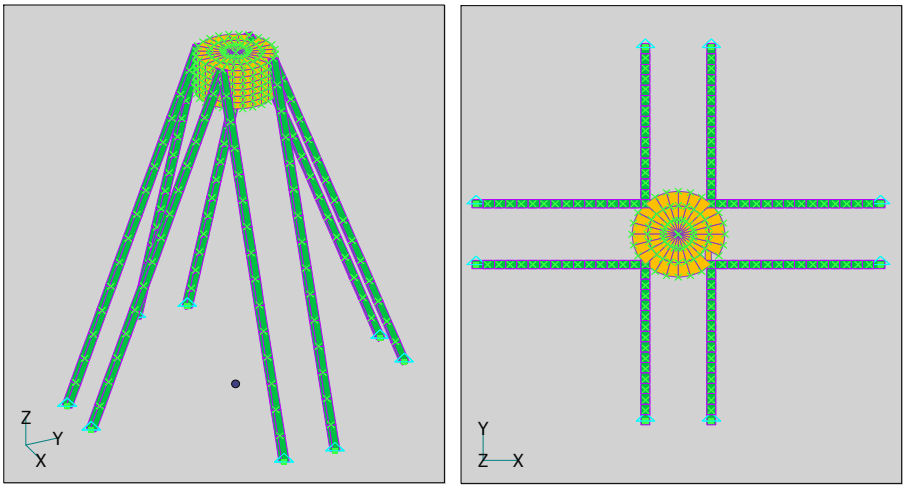

Figure 6: octopod truss with 48mm OD pinned-pinned tubular struts; fundamental mode: 35.5Hz (violin); obscuration: 9.8%.

Trends for this design are identical to those shown in Figure 3 for the hexapod with pinned-pinned legs: the truss modes are high enough that they never become a critical constraint.

5.1.4 Octopod with Fixed-Fixed Legs

If we instead assume perfect built-in end conditions for the struts, the violin requirement alone gives a minimum outside diameter of 22mm. At that diameter, FE models give the lowest truss mode at 30.6Hz. To recover a 35Hz minimum, the cross sectional area must be increased approximately according to Equation (6). Models of a 24mm OD x 1.5mm[1] wall predict the lowest truss mode at 35.3Hz; the first violin mode occurs at 38.9Hz. Figure 7 illustrates that option. The obscuration ratio is 4.9%.

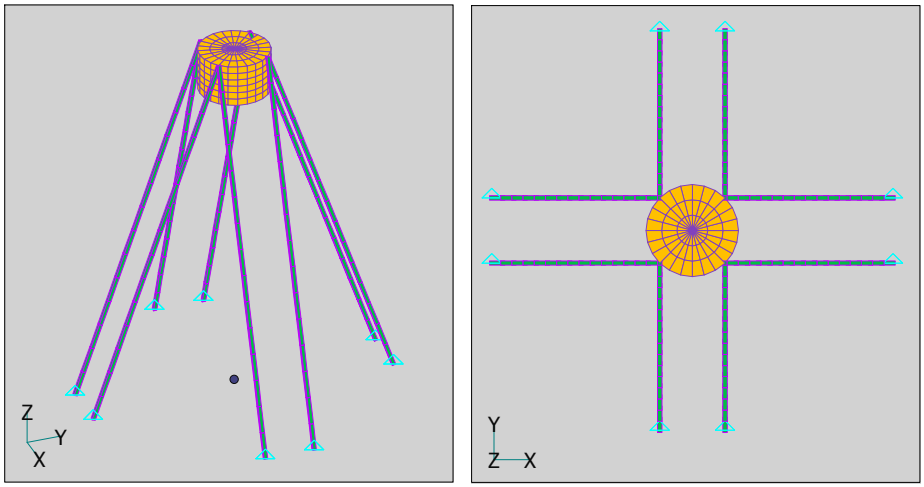

Figure 7: octopod truss with 24mm OD fixed-fixed tubular struts; fundamental mode: 35.3Hz (violin); obscuration: 4.9%.

[1] the wall thickness for this design was increased to 1.5mm as this made it possible to stay within the <5% obscuration goal.

Figure 8 shows the approximate trends for the required diameter of the members as a function of the SMA mass and the mirror separation. The same observations that were made about Figure 5 can be made here.

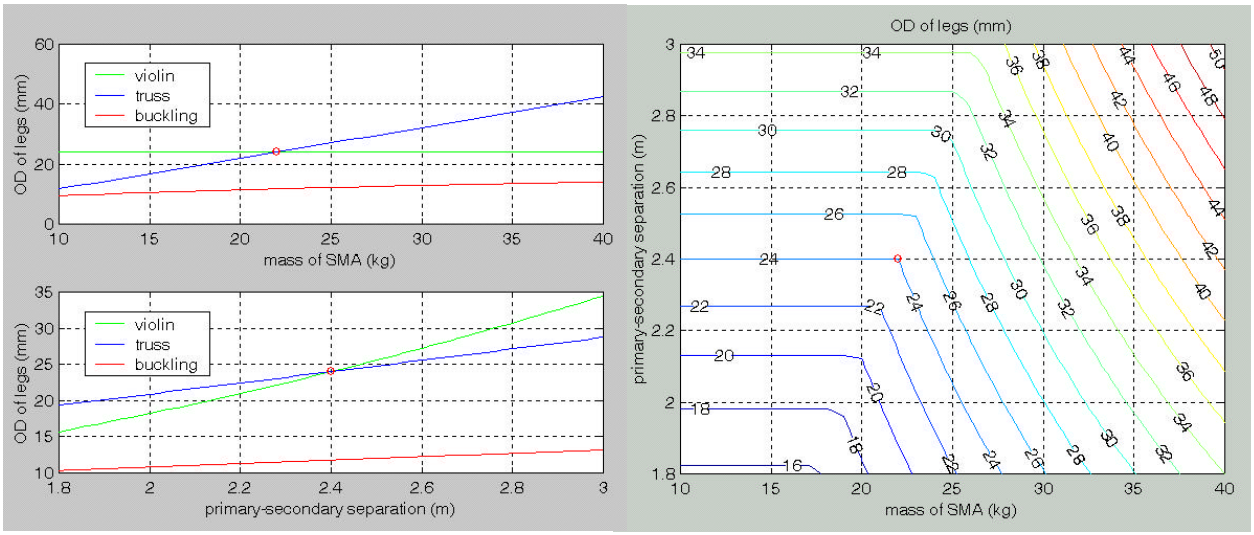

Figure 8: trends of required OD of legs for various mirror separations and SMA masses; nominal point (open red circle) is octopod truss with 24mm OD fixed-fixed tubular struts; wall thickness is constant at 1.5mm.

5.2 Direct Support Frame Concepts

The next sections describe support frame concepts that rely at least in part on bending stiffness of the support legs to stabilize the SMA. An issue with relying on bending properties is that the positional stability of the SMA relies on curvature stability of the struts. If even small temperature gradients develop in the cross section of the legs (from being exposed to deep space on one side and the instrument on the other, for example), they will bend and significantly perturb the SMA alignment. Initial alignment is also significantly more difficult to perform as it relies on the angular alignment of the anchoring features of the various struts. For these reasons, these concepts are not recommended for SNAP, unless they were considered attractive for some other compelling reason. They are included here for completeness and comparison purposes.

5.2.1 Tripod

In this design, the SMA is supported by 3 legs equally spaced around it and rigidly anchored into the primary optical bench and the SMA structure. With fixed-fixed boundary conditions, the minimum mean diameter is about 21mm for 35Hz violin modes. Legs with that diameter however are not nearly rigid enough in bending to achieve a 35Hz frame mode. Instead, an outside diameter of 112mm with a 1mm wall is necessary to achieve the required bending stiffness. That design is illustrated in Figure 9; it has a first frame mode at 35.3Hz, violin modes at 197Hz, and an 8.6% obscuration ratio.

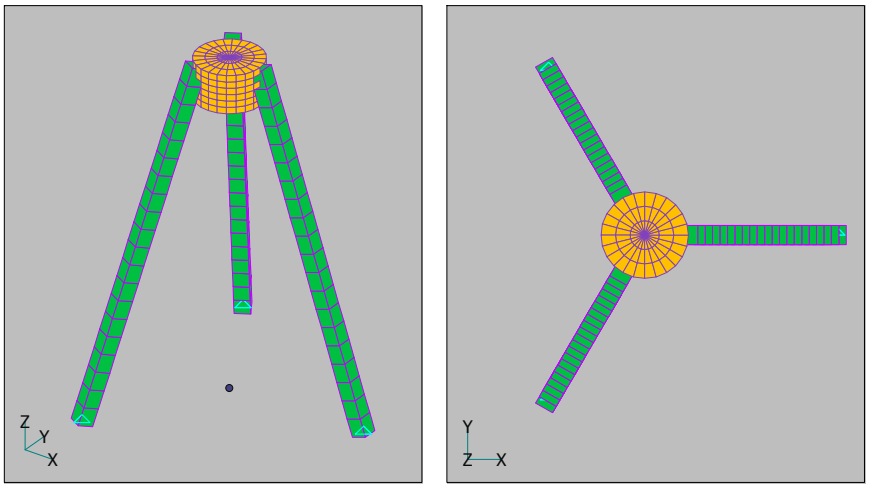

Figure 9: tripod frame with 112mm OD tubular struts (1mm wall); fundamental mode: 35.3Hz (frame); obscuration: 8.6%.

Trends for this design are given in Figure 10. As expected, the bending stiffness of the legs (frame mode) is the critical constraint throughout the design space.

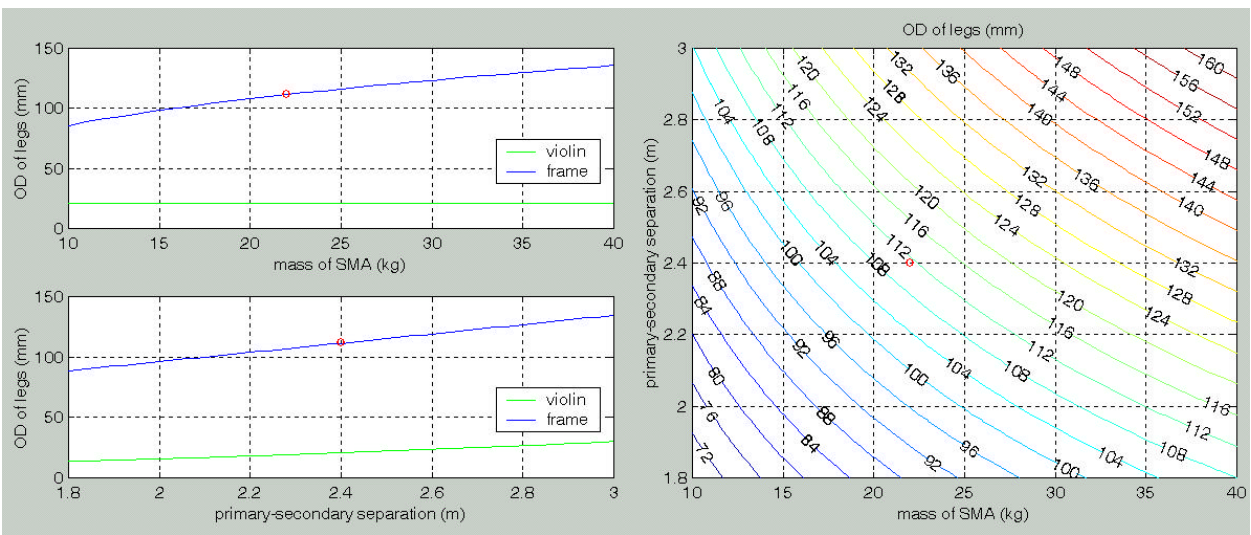

Figure 10: trends of required OD of legs for various mirror separations and SMA masses; nominal point (open red circle) is tripod frame with 112mm OD legs; wall thickness is constant at 1.0mm.

5.2.2 Quadrupod

This concept uses a simple 4-legged frame as shown in Figure 11. The legs are rigidly attached to the base and the SMA. The violin requirement imposes a minimum OD of 22mm (1mm wall), which would lead to 2.2% obscuration. However, FEM simulations of that design show a global transverse frame mode at 3.7Hz because of the insufficient bending stiffness of the struts, and a torsional mode at 8Hz.

For 5% obscuration with 4 legs, one can afford an OD of 49mm. With a 1mm wall, that design has a first transverse frame mode at 12.4Hz, still substantially too low. A torsional (yaw of SMA) mode is also predicted at 26Hz. To bring that frequency up to our 35Hz requirement, we must increase the mean diameter and/or the wall thickness approximately according to Equation (7), i.e.

$$\frac{35.0\text{Hz}}{12.4\text{Hz}} = \left(\frac{D}{48\text{mm}}\right)^{1.5}\left(\frac{t}{1\text{mm}}\right)^{0.5}. \qquad (12)$$

Equation (12) confirms that increasing the diameter is structurally more efficient than increasing the wall thickness (but of course less desirable from the obscuration standpoint). Constraining the mean diameter to 48mm to stay close to 5% obscuration would require increasing the wall thickness to 8mm (an impractical value for mostly-unidirectional laminates), leading to a 52×44mm tube and 15kg of composites. If on the other hand the wall thickness is maintained at 1mm, the mean diameter must be increased by a factor of 2. Fine-tuning the OD for a first mode at 35Hz requires 102×100×1mm legs, leading to a 35.1Hz frame mode and 10.4% obscuration. That design is illustrated in Figure 11.

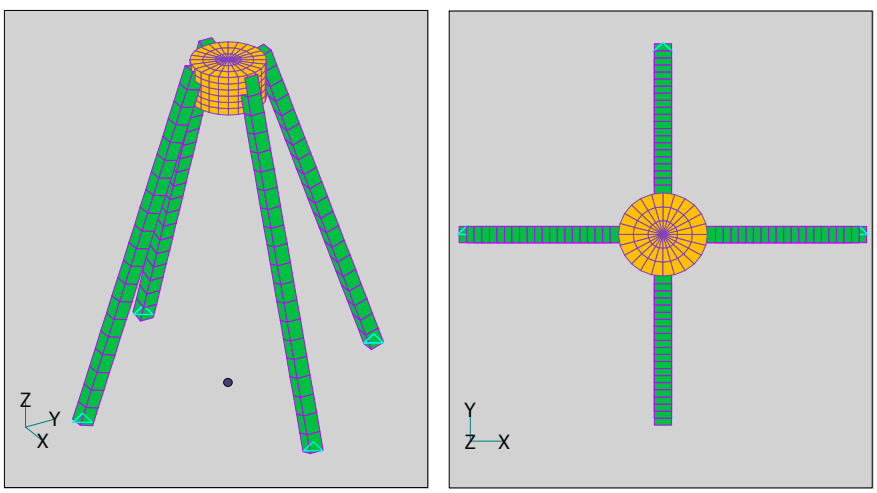

Figure 11: quadrupod frame with 102mm OD tubular struts (1mm wall); fundamental mode: 35.1Hz (frame); obscuration: 10.4%.

Trends for that design are given in Figure 12. Just like for the tripod of Figure 9, this design is entirely controlled by the bending stiffness of the legs.

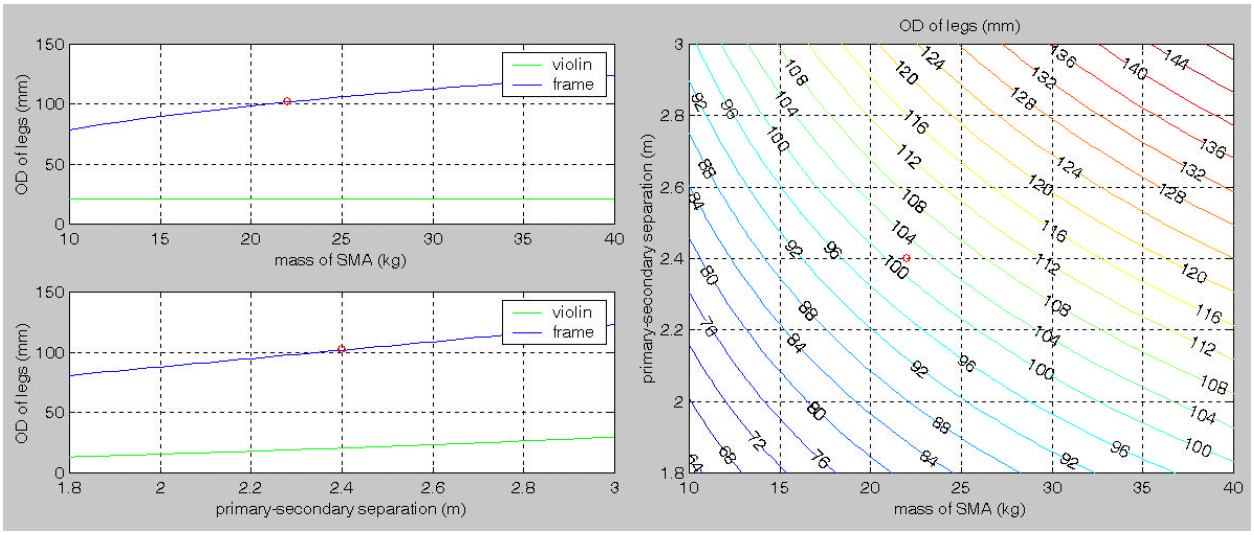

Figure 12: trends of required OD of legs for various mirror separations and SMA masses; nominal point (open red circle) is quadrupod frame with 102mm OD legs; wall thickness is constant at 1.0mm.

5.2.3 Cross-Braced Quadrupod

To increase the stiffness of the quadrupod concept without affecting the obscuration, it may be possible to cross brace the legs in their own "shadow". A possible option is illustrated in Figure 13. The concept uses a set of 8 shorter and smaller diameter beams to connect the 4 base attachment points to the top of the inner baffle, then to points along the primary legs, near the SMA. The baffle plays an important role in this scheme by providing a set of stable attach point at its top. The top of the baffle must be stiffened by a ring to achieve this.

A design was first created for this concept based on the 5% obscuration quadrupod (49×47mm tubes). A 1m high by 0.3m diameter inner baffle was assumed, with a 1mm wall of a composite with the same properties as the legs. The top of the ring was assumed stiffened by a ring of 20×18mm composite tubing. The secondary cross-bracing members were also assumed made of 20×18mm tubing. The model is shown in Figure 13.

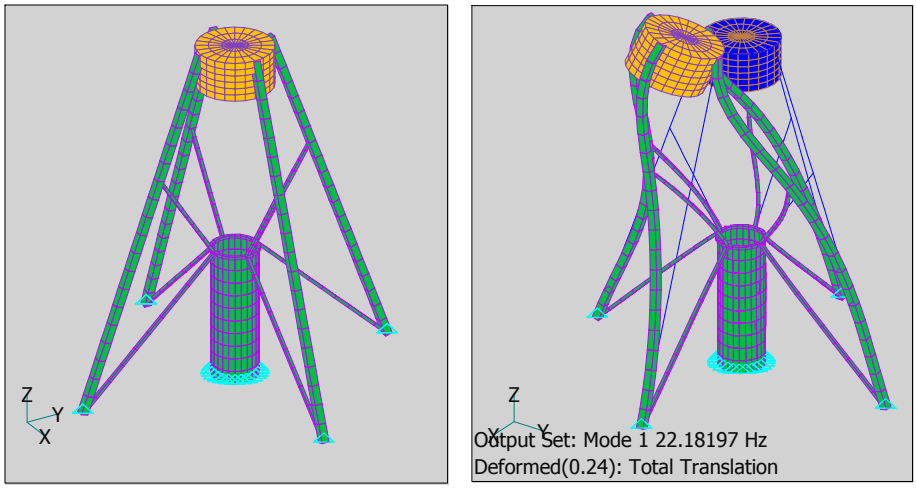

Figure 13: cross braced quadrupod frame with 49mm OD primary legs and 20mm OD braces; fundamental mode: 22.2Hz (frame); obscuration: 5%.

FEM predictions show a first transverse frame mode at 22.2Hz (increased from 12Hz in the unbraced version). The same model still predicts a torsional mode at 26Hz, just like in the unbraced design, since this mode cannot be affected by cross-bracing. Only an increase in the torsional stiffness of the primary legs can measurably stiffen that mode.

Since both bending and torsional stiffness of tubular members scale as D^3t, raising the natural frequency to 35Hz requires increasing the diameters by a factor 1.35; this brings the OD×ID dimensions of the primary legs and cross braces to 67×65mm and 27×25mm, respectively. A FE model of this design (Figure 14) predicts the lowest mode at 34.4Hz, as expected. The obscuration ratio is about 6.8%.

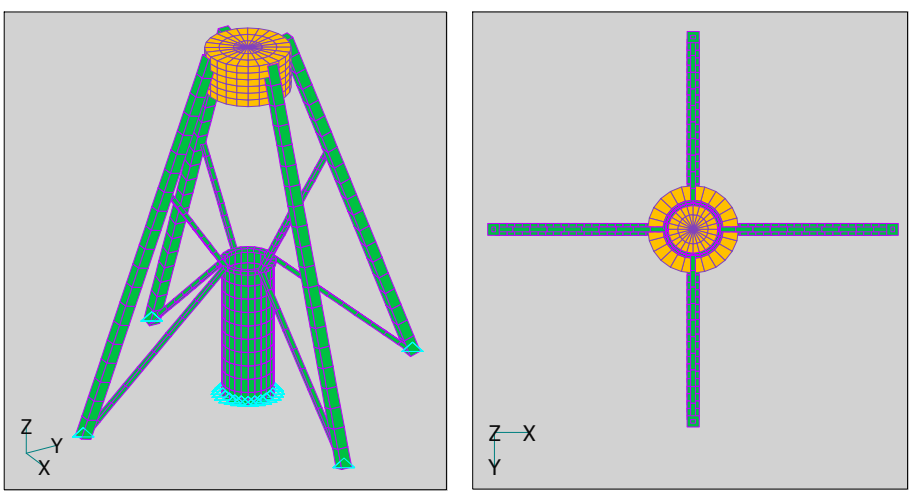

Figure 14: cross braced quadrupod frame with 67mm OD primary legs and 27mm OD braces; fundamental mode: 34.4Hz (frame); obscuration: 6.8%.

Note that with the diameter listed above, the secondary legs are likely not entirely in the primaries' shadow over the full +/-0.7° field of view (the top cross braces intersect the light path

where it is already substantially converged). Exact calculations were not carried out. Because the effect of the braces is primarily in traction/compression, their outside diameter could be reduced if necessary by increasing the wall thickness, keeping the cross sectional area constant.

Trends for the design of Figure 14 are shown in Figure 15. Since this cross-braced design is still essentially a four-legged frame, the trends are dominated by bending and torsional stiffness requirements for the primary legs.

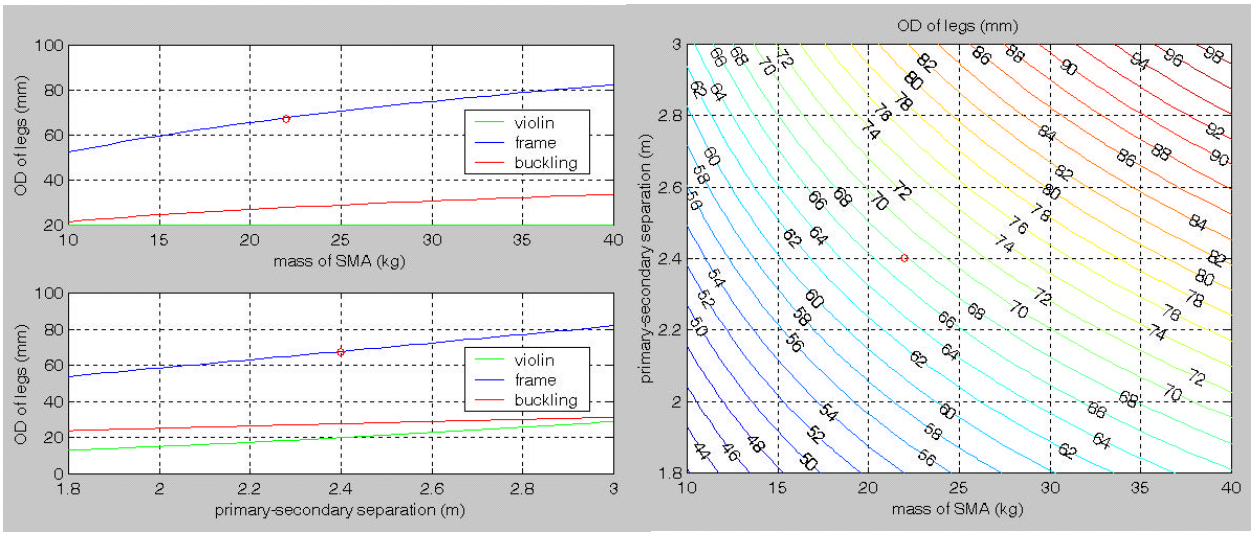

Figure 15: trends of required OD of primary legs for various mirror separations and SMA masses; nominal point (open red circle) is cross-braced quadrupod frame with 67mm OD primary legs and 27mm OD braces; wall thickness is constant at 1.0mm; OD of cross-braces follows same ratio.

5.2.4 Curved Leg Hexapod

Straight legs obscuring part of the primary mirror aperture cause distinct diffraction spikes in the images. In theory, the use of curved legs with a projected radius of curvature equal to that of the outer edge of the primary mirror can eliminate discrete diffraction spikes by "spreading" the diffracted light at all angles.

Clearly, the use of curved members is far from optimal from a structural standpoint and comes with a host of manufacturing concerns. However, the option may be worth considering for its optical advantages so a design of that type is included here.

In an attempt to increase the effective stiffness of curved legs, a pattern of six, intersecting legs is used. The legs are attached to each other at intersection points so that they support each other, reducing their effective length by about one half. The legs have an ellipsoidal curvature along their length. The projected radius of curvature is constant at 1m. The design is illustrated in Figure 16. With 6 legs, the concept approaches that of a truss; however, because of the curvature of the legs, their "axial" stiffness is largely controlled by bending of the cross-section.

To achieve a 35Hz fundamental mode, 38×36mm tubular legs are required. That design is shown in Figure 16; its fundamental mode is a global frame deformation at 35.2Hz. It also has a violin mode (radial, by pairs of legs) at 59.4Hz. The obscuration ratio is 8.2%.

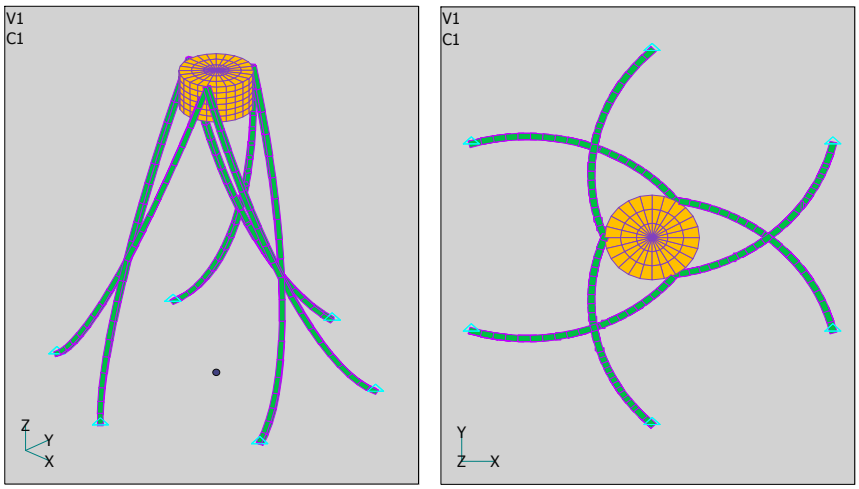

Figure 16: curved leg hexapod frame/truss with 38mm OD (1mm wall) legs; fundamental mode: 35.2Hz (frame); obscuration: 8.2%.

Trends for that design are shown in Figure 17. Because the fundamental mode of this design is somewhat of a mixed frame/truss deformation, the dependence of the natural frequency on the mean diameter is expected to be somewhere between $(D/L)^{0.5}$ (truss) and $(D/L)^{1.5}$ (frame). To provide more accurate trends, the actual exponent was determined numerically by comparing two FE runs for different diameters. The dependence was found to follow $(D/L)^{1.26}$, closer to a frame than a truss, as expected.

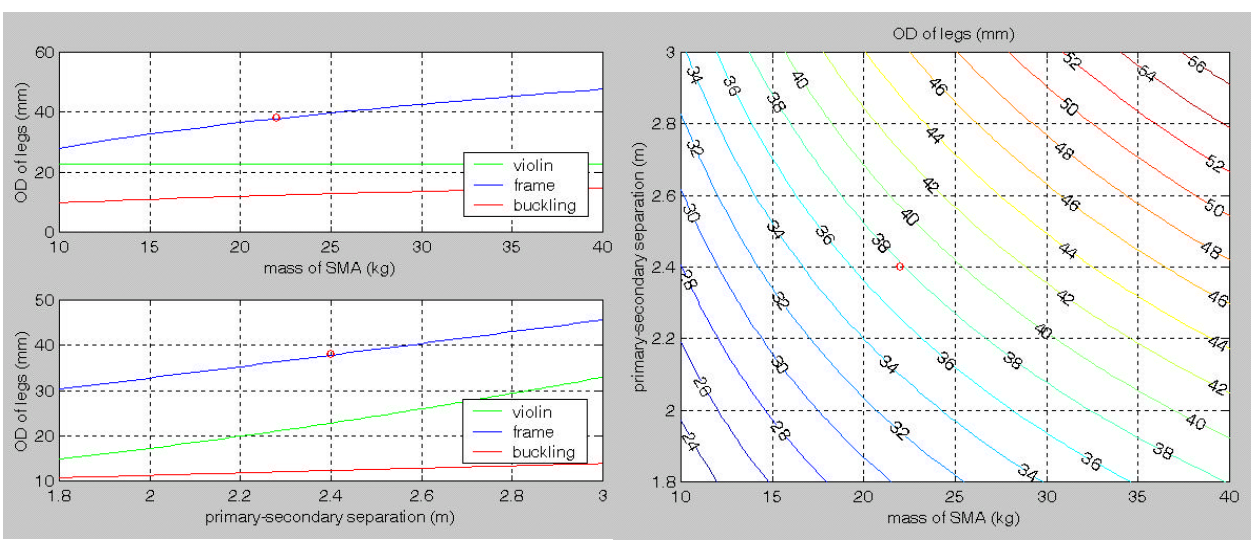

Figure 17: approximate trends of required OD of legs for various mirror separations and SMA masses; nominal point (open red circle) is curved leg hexapod frame with 38mm OD legs; wall thickness is constant at 1.0mm.

5.3 Indirect Support Concepts

As an alternative to supporting the SMA directly from the periphery of the POB, and in an attempt to further reduce the obscuration ratio, an intermediate support structure can be used to provide attachment points for the spider closer to the SMA level. The intermediate structure lies entirely outside the aperture and does not affect obscuration. Because the spider legs are much shorter, they are likely to have a smaller required diameter, thereby reducing obscuration. The disadvantages are increased complexity, higher mass, and interference with the primary baffle (either the intermediate structure lies inside the primary baffle, causing concerns about stray light reflection, or it lies outside and requires the spider to traverse the baffle).

5.3.1 Hubble-like Cylindrical Truss and Spider

The extreme case consists of building a stiff intermediate structure that bring the spider attach points in (or near) the plane of the secondary mirror. This concept was used in the HST and leads to very small obscuration ratios. The concept was re-optimized based on the design presented in [2] using trend relationships. This case is a perfect example of mixed truss and frame modes for which the appropriate trend equation must be used for each mode (see Figure 1): a plunge mode of the spider and SMA is truss dominated, while a torsion mode of the spider and SMA is frame dominated. The final dimensions for the various elements are 14×12mm for the 32 outer truss struts, 53×51mm for the three rings, and 14×12mm for the spider legs. The FE model of that design is shown in Figure 18; the model predicts the fundamental mode at 35.0Hz (SMA torsional/yaw from spider frame deformation). A plunge mode of the MSA (a truss mode of the spider) occurs at 62.3Hz. The obscuration ratio is only 1.8%.

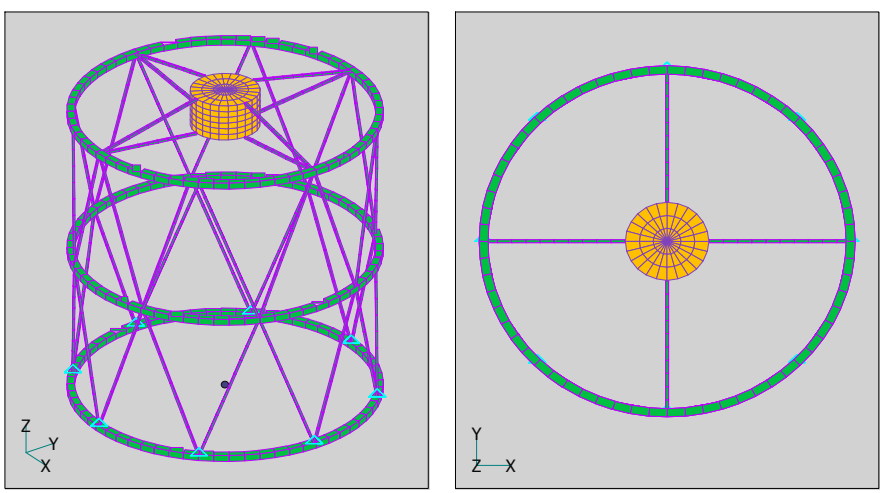

Figure 18: Hubble-like truss/frame with 53mm OD rings, 14mm OD truss, and 18mm OD spider beams (all 1mm wall); fundamental mode: 35.03Hz (frame); obscuration: 1.8%.

Figure 19 shows the trend of the required OD of the spider legs as a function of the SMA mass. The primary to secondary mirror separation only affects the design of the intermediate truss, not that of the spider.

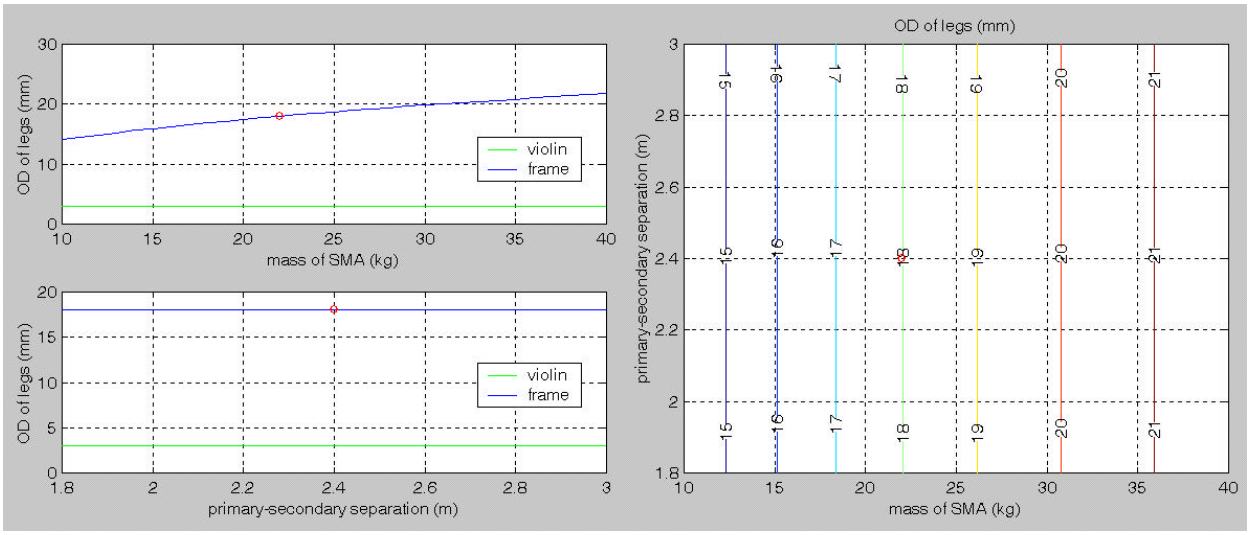

Figure 19: approximate trends of required OD of spider beams for various mirror separations and SMA masses; nominal point (open red circle) is Hubble-style truss/frame with 18mm OD spider beams; wall thickness is constant at 1.0mm.

6. Summary and Conclusions

A number of conceptual designs for the SMA support structure have presented in the previous section. Those designs and their stiffness, obscuration, interference, and mass properties are summarized in Table 1. The Table also contains the author's initial assessment of technical risk, assembly and alignment difficulties, and component fabrication difficulties, for each design.

It should be noted again (refer to the Table) that for some designs the estimated mass of the tube end fittings (very rough conservative estimate for Invar fittings) is large and was not included in the FE models so that the natural frequencies listed for some of those designs may not be realistic. A more realistic treatment of end fittings is reserved for the preliminary design phase.

General conclusions can be drawn from the table:

- Frame designs (tripods and quadrupods) require such high bending stiffness from the legs that the diameters become prohibitive, both from a manufacturing and obscuration standpoints. They also require massive end fittings and are difficult to align. In addition, their dimensional stability is in question as they are more sensitive to transverse temperature gradients in the legs' cross sections. The leg diameter can be reduced somewhat by cross bracing with secondary members in the shadow of the primary legs, but this increases complexity and introduces yet more reasons to expect insufficient dimensional stability.
- Truss designs (hexapods and octopods) perform well by relying only on axial load transfer through the legs, which allows for smaller diameters. They also do not exhibit bending-extensional coupling that would compromise stability. However, when

assuming real truss end conditions (pinned-pinned) and because of the long length of the legs, violin modes dominate the design and require fairly large diameters which make it impossible to meet the obscuration goal. By locking the angular freedom at the ends of the legs (after initial alignment is complete), the diameter can be reduced by approximately a factor 2, leading to very appealing, simple designs with low obscuration, at the price of somewhat more complicated end fittings and assembly procedures. Hexapods have an important advantage in that they are real kinematic supports, which should avoid any risk of introducing assembly stresses in the structures. They are also simpler, easier to align and have lower obscuration than octopods. On the other hand, octopods cause fewer interference spikes than hexapods.

- To eliminate discrete interference spikes, a curved leg hexapod design can be conceived that has acceptable diameters. The obscuration ratio is significantly increased from 3.7% (for a straight-leg hexapod) to 8.2% (as the primary load transfer mechanism swith fro truss-like to primarily frame-like), but remains reasonable. Clearly, there are severe risk and manufacturing issues with this design as well as very strong bending-extensional coupling, which make extreme dimensional stability doubtful. For these reasons, it should only be considered if the elimination of discrete interference spikes was a compelling advantage for optical performance.
- Finally, a heavier, but much lower obscuration (1.8%) structure can be built by using an intermediate structure to move the attach points of the spider very near the level of the SMA. This is a proven approach (used successfully in HST) that retains primarily a truss quality and uses simple components. However, the component count, mass, and cost are much higher than in direct support truss designs. This approach also requires the spider to traverse the primary baffle, unless the baffle was outside of the structure, which introduces stray light issues.

	Tripod	Quadrupod	Cross-Braced Quadrupod	Hexapod truss with pinned ends	Hexapod truss with fixed ends	Octopod truss with pinned ends	Octopod truss with fixed ends	Curved leg hexapod	Hubble style (indirect support)	
# legs	3	4	4[1]	6	6	8	8	6	4[2]	ea
outside diameter	112	102	67[1]	48	23	48	24	38	18[3]	mm
wall thickness	1.0	1.0	1.0	1.0	1.0	1.0	1.5	1.0	1.0	mm
obscuration[4]	8.6	10.4	6.8	7.3	3.5	9.8	4.9	8.2	1.8	%
interference spikes	6	4	4	4	6	4	4	0[5]	4	ea
lowest violin mode	197	180	?	36	35	36	35	59	84	Hz
lowest global mode	35	35	34	56	35	?	39	35	35	Hz
mass of composite[6]	6.4	7.7	8.9	5.5	2.6	7.3	5.2	4.5	12.1	kg
mass of fittings[7]	39.7[15]	41.3[15]	16.1[15]	8.5	1.4	11.3	1.8	4.6	10.1	kg
total mass of metering structure	46.1	49.0	25.0	14.0	4.0	18.6	7.0	9.1	22.2	kg
technological risk	M[10]	M[10]	H[11]	VL[12]	L	L	M	VH[16]	L[17]	-[8]
assembly and alignment difficulty	H[9]	H[9]	VH	VL[13]	L	L	M	M	H	-[8]
component fabrication difficulty	L	L	M	VL[14]	L	VL	L	VH[16]	M	-[8]

[1] complete structure has 4 primary legs an 8 cross-bracing beams in the shadow of the primary legs
[2] the spider alone is composed of 4 sets of beams; in each set, one beam lies in the shadow of the other; the spider is supported by a barrel shaped truss that includes 32 struts and 3 rings
[3] spider beams only; the other truss members and the ring have OD's equal to 14 and 53mm, respectively
[4] percent reduction in the otherwise unobstructed area of the primary mirror (assuming the SMA has an OD of 0.5m)
[5] projected in the plane of the primary mirror, all 6 legs have radii of curvature equal to 1 meter, avoiding the creation of discrete interference spikes
[6] total mass of Al/GFRP composite tubing
[7] *very* rough estimate of total mass of tube end-fittings (assuming Invar and a conservative design), for indication only.
[8] Very Low, Low, Medium, High, Very High
[9] relies on 2 d.o.f. angular positioning at base of each leg to align SMA
[10] note 9 + temperature gradients in cross-section affect SMA alignment.
[11] note 10 + much increased complexity and partial reliance on baffle shell for stability
[12] simple, statically determinate, no effect from temperature gradients in cross-section on SMA alignment
[13] each leg can be adjusted independently, simple end conditions (flexures).
[14] circular tubes with simple end fitting and simple attachment features
[15] since about half of this mass is at the top of the structure, and it is not small compared to the SMA mass of 22kg, the natural frequency listed is not entirely realistic; the trend curves can be used to estimate a more realistic design.
[16] curvature of legs make manufacturing difficult, introduces strong bending-extensional coupling, reducing dimensional stability
[17] very similar to HST metering structure; existing flight heritage.

Table 1: summary of 22 kg SMA support structure concepts, sized for 35Hz fundamental frequency using 250GPa, 2226kg/m^3 near-zero CTE GFRP/Al composite.

7. References

1. E. Ponslet, "Design Requirements for the SNAP Telescope Structures," HTN-113005-0001-A, HYTEC, Inc., June 20, 2000.
2. E. Ponslet, "Conceptual Design Notes for Primary Metering Structures for the SNAP Telescope," HTN-113901-0001, HYTEC, Inc., April 25, 2000.
3. Telephone conferences with SNAP collaboration members at LBNL, June 8 and August 3, 2000.
4. Supernova / Acceleration Probe (SNAP), A Science Proposal to the Department of Energy and the National Science Foundation, Version 1.00, SNAP Collaboration, February 8, 2000.