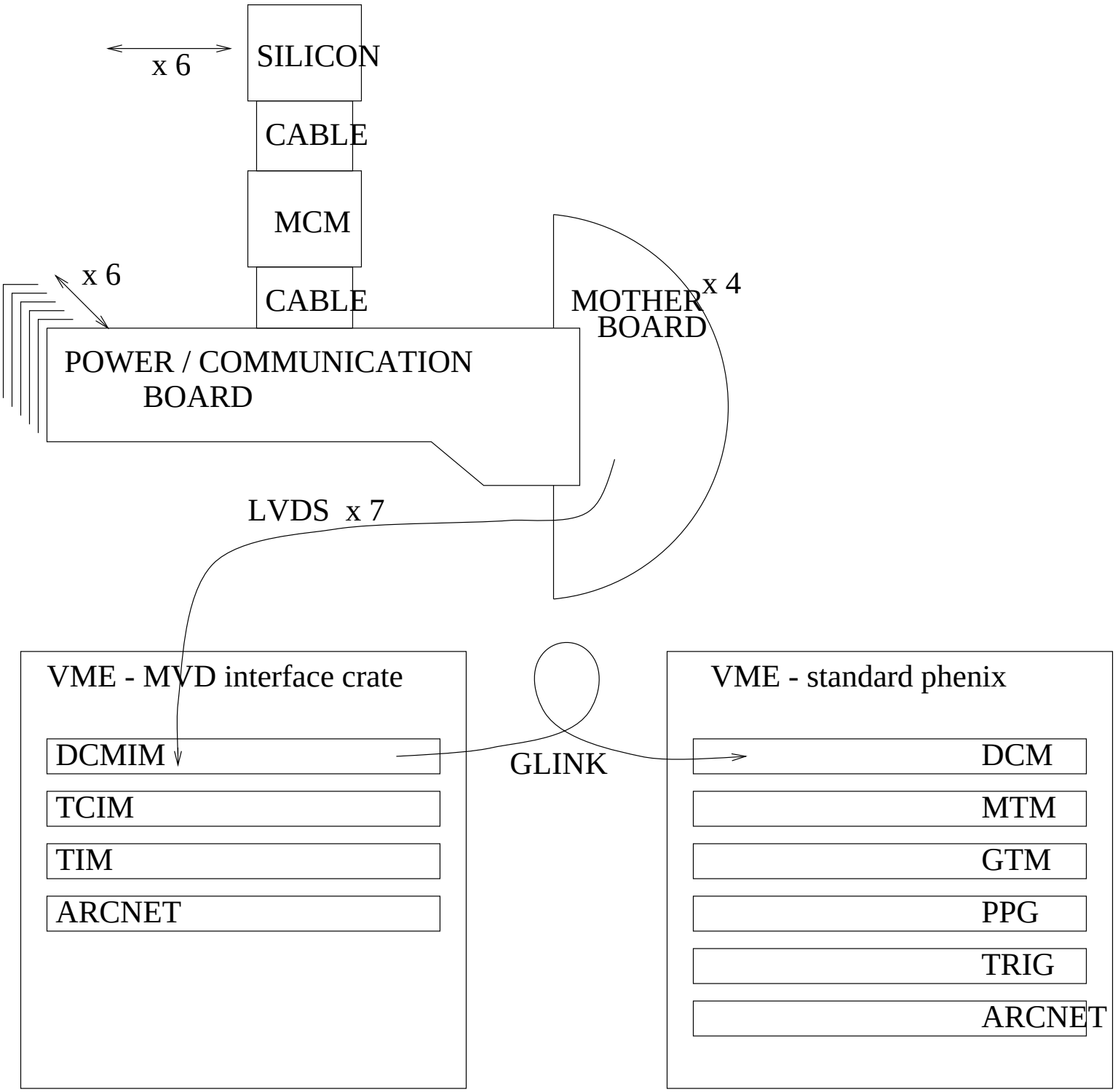
x 6
SILICON
CABLE
MCM
x 6
CABLE
MOTHER
BOARD
x 4
POWER / COMMUNICATION
BOARD
LVDS x 7
VME - MVD interface crate
DCMIM
TCIM
TIM
ARCNET
GLINK
VME - standard phenix
DCM
MTM
GTM
PPG
TRIG
ARCNET