PHENIX

AMES LABORATORY - DOE
IOWA STATE UNIVERSITY

COMMUNICATION LINKS/RATES FOR L1

(18-FEB-1998)
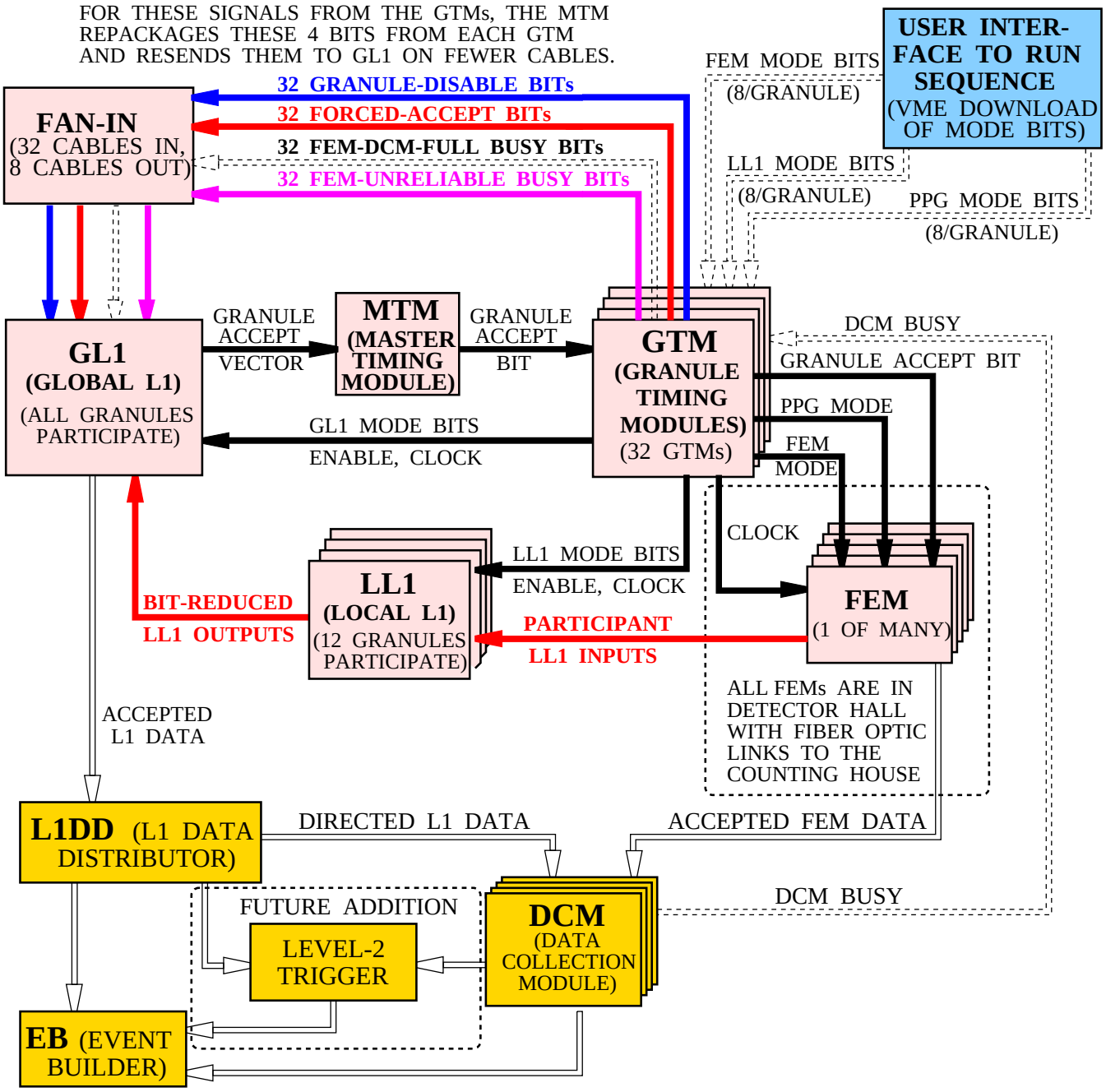
LEGEND:
FILLED ARROWS FOR DATA TRANSFER AT BEAM CROSSING RATE
EMPTY ARROWS FOR DATA TRANSFER AT ACCEPTED EVENT RATE
DASHED ARROWS FOR DATA TRANSFER AT ASYNCHRONOUS RATE