PHENIX

AMES LABORATORY - DOE
IOWA STATE UNIVERSITY

COMMUNICATION LINKS/RATES FOR L1

(3-MAR-1998)

LEGEND: FILLED ARROWS FOR DATA TRANSFER AT BEAM CROSSING RATE
EMPTY ARROWS FOR DATA TRANSFER AT ACCEPTED EVENT RATE
DASHED ARROWS FOR DATA TRANSFER AT ASYNCHRONOUS RATE
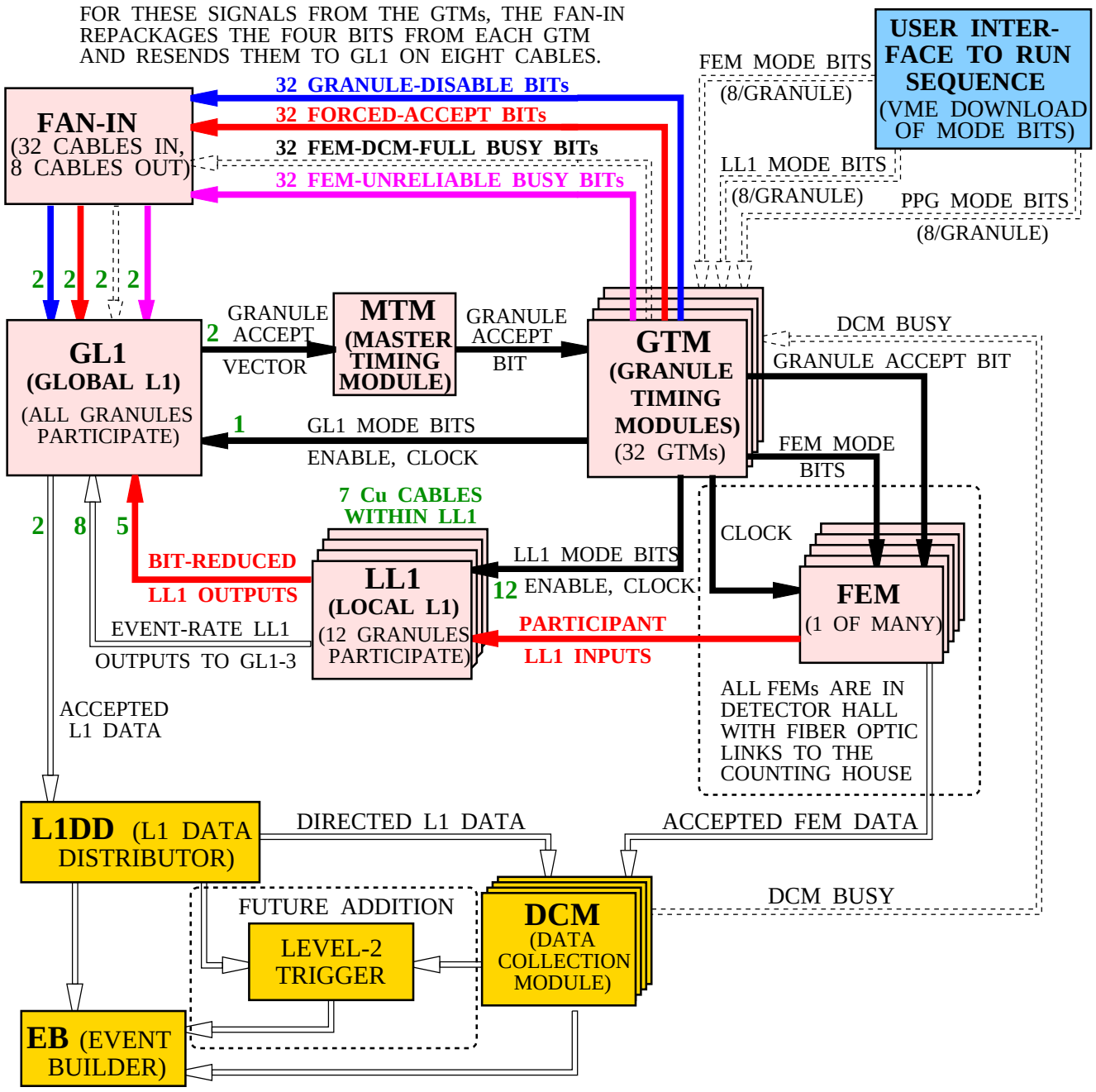
GREEN NUMBERS GIVE THE CU CABLES USED IN L1 (45 TOTAL).