THIS PRINT SUPERSEDES ANY PRINT DATED PRIOR TO:	NO: LF016_13
2-15-13	

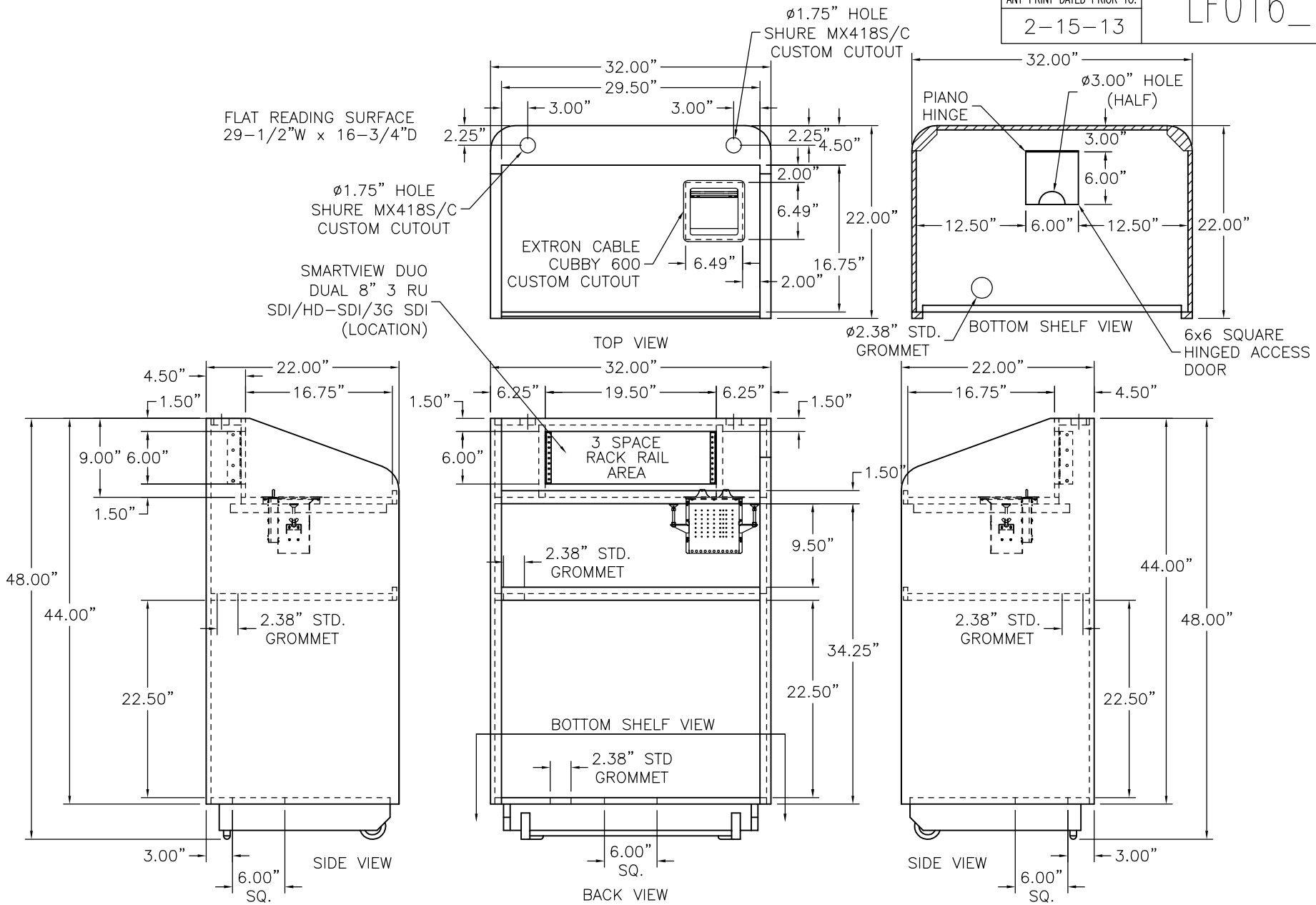

REVISION					
REVISED BY:					
APP'D BY:					

SCALE:	DRAWN BY:	DATE:	APP'D BY:	DATE:	
1=16	K.J.L.	2-15-13			CAD

NAME: CONCORD 32" FLR LECTERN (CUSTOM)

DA-LITE SCREEN CO. INC.
WARSAW, INDIANA, USA

NO: LF016_13