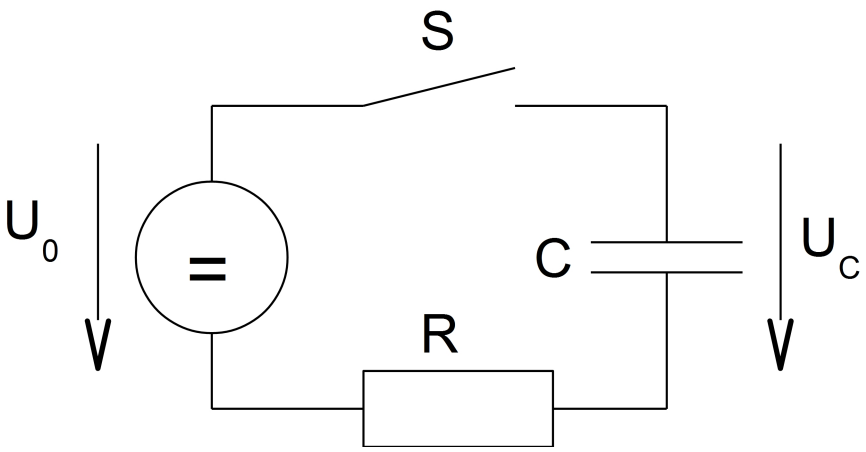
S
U0
=
C
UC
R

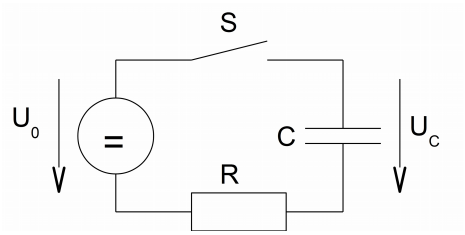
S
U0
=
C
UC
R

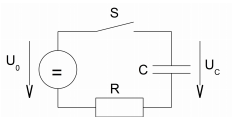
S
U0
=
C
UC
R

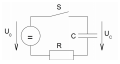
S
U0
=
C
UC
R