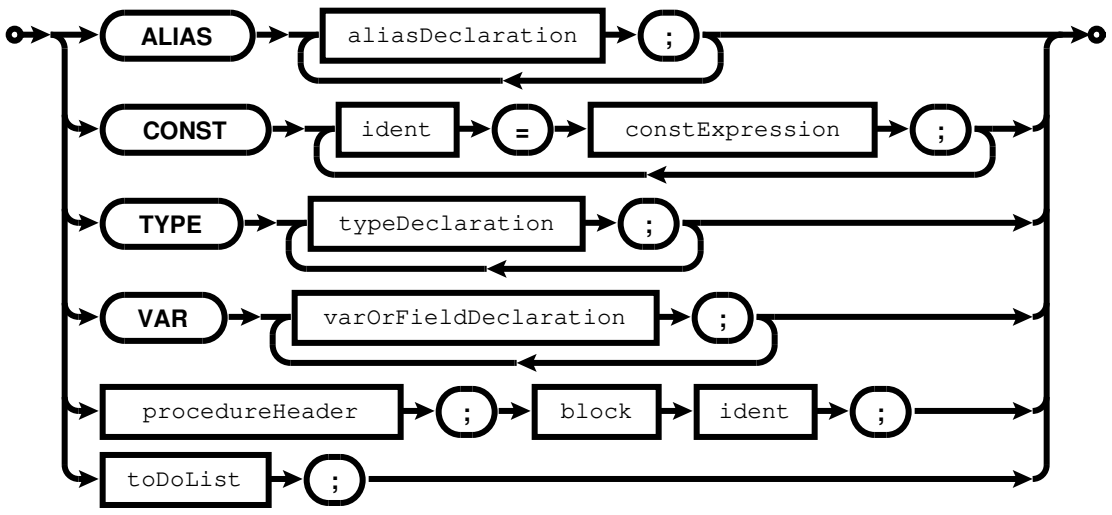
ALIAS
aliasDeclaration
;
CONST
ident
=
constExpression
;
TYPE
typeDeclaration
;
VAR
varOrFieldDeclaration
;
procedureHeader
;
block
ident
;
toDoList
;