UMSL Student Rec Center - Rel. # 007

Packing Group: A Qty: 1

| Panel | Qty | Side | Grp |
|---|---|---|---|
| P00025-0 | 1 | E | A |

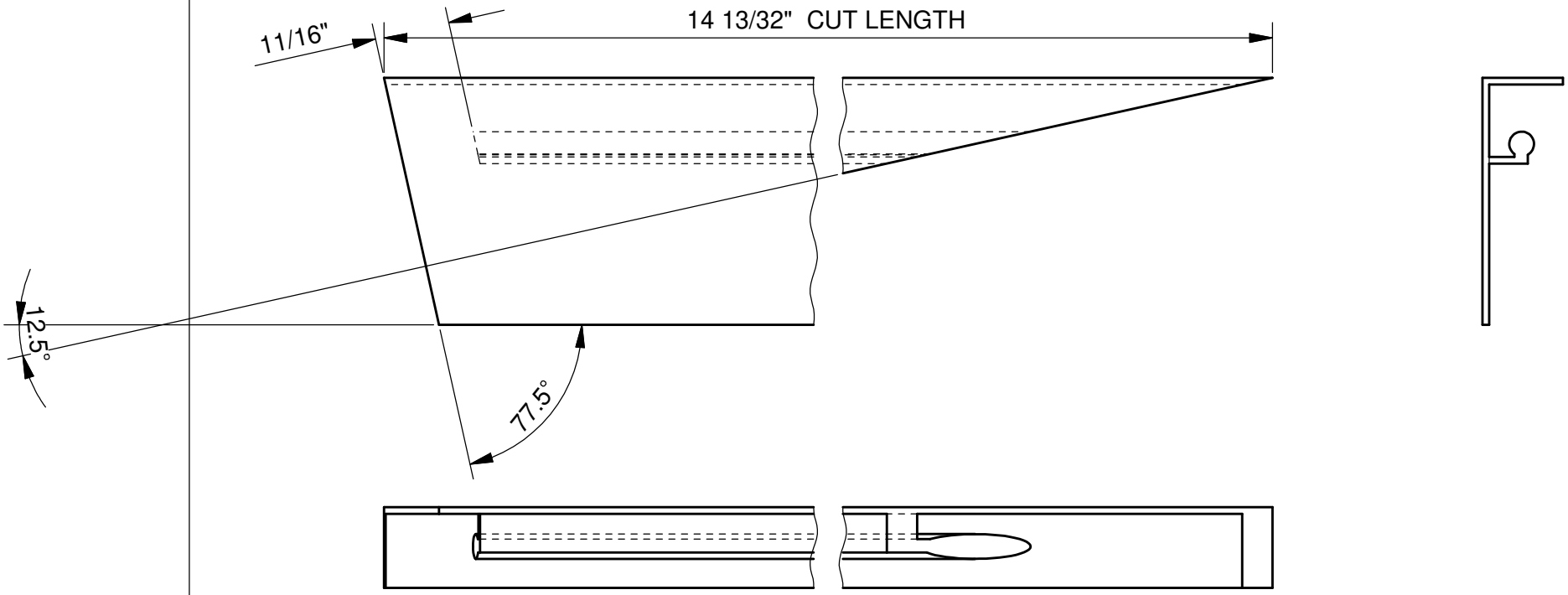


CUT: ☐ ROUT: ☐ FAB: ☐ ASS'Y: ☐

**UNIVERSE CORP.**

2013-04-0248-R007-GF-E-00383

F Terminator 3/8 Custom Short Leg (DCA-055)