UMSL Student Rec Center - Rel. # 007

Packing Group: A Qty: 1

Panel	Qty	Side	Grp
P00026-0	1	B	A

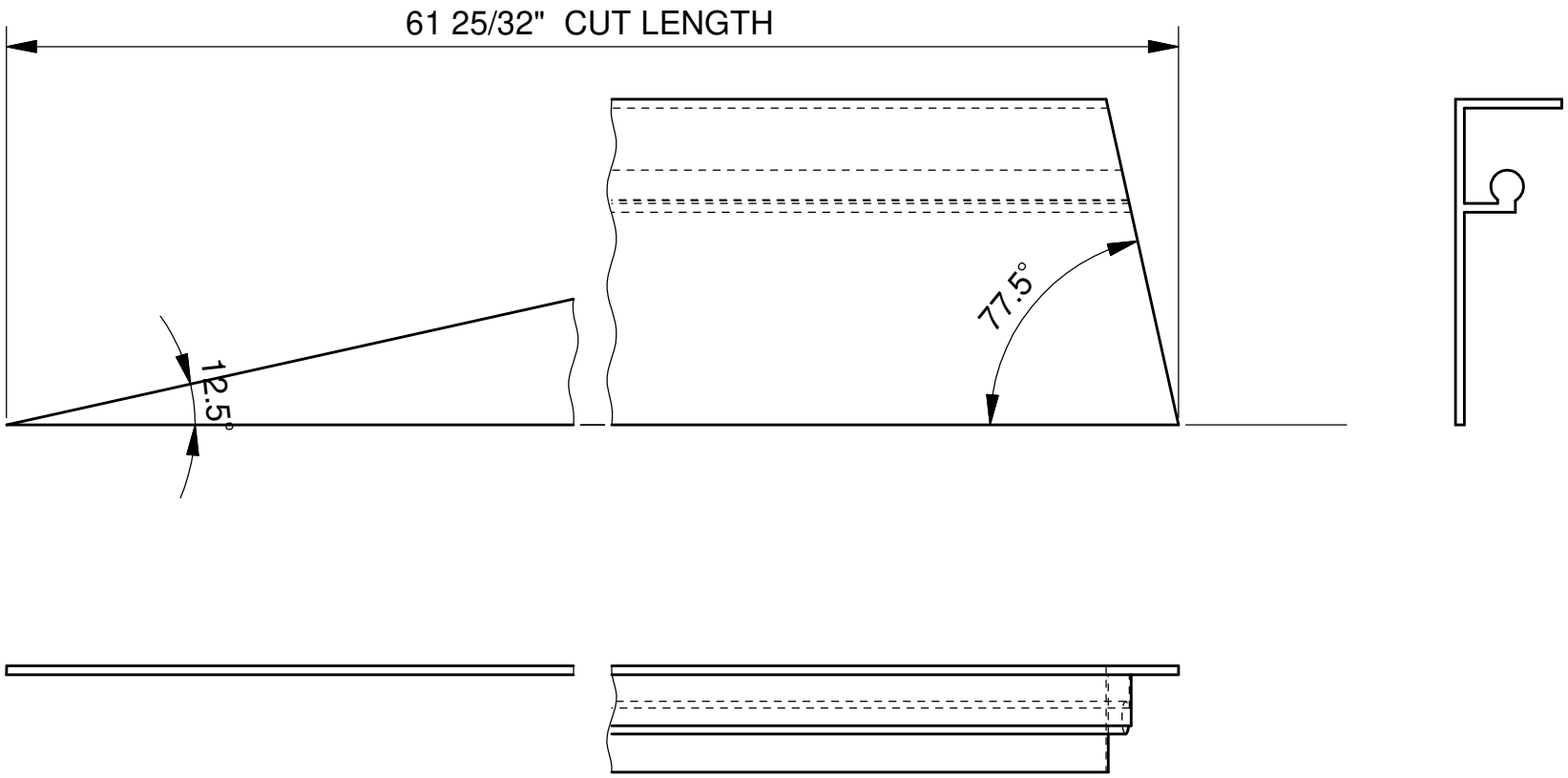

CUT: ☐ ROUT: ☐ FAB: ☐ ASS'Y: ☐

UNIVERSE CORP.

2013-04-0248-R007-GF-B-00336

F Terminator 3/8 Custom Short Leg (DCA-055)