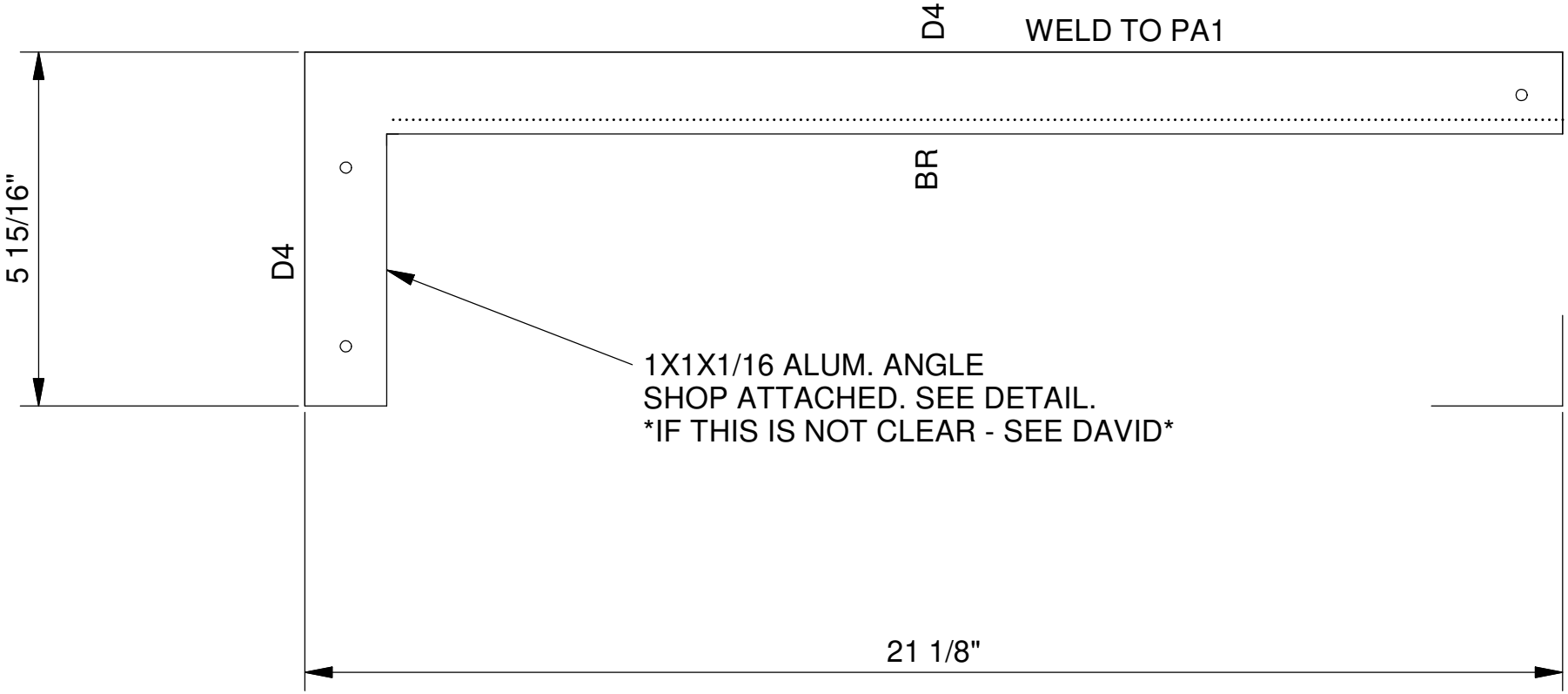

CUT: ☐ ROUT: ☐ FAB: ☐ ASS'Y: ☐

UNIVERSE CORP.

2013-04-0248-R007-RL-A-00070

Return leg flat pattern