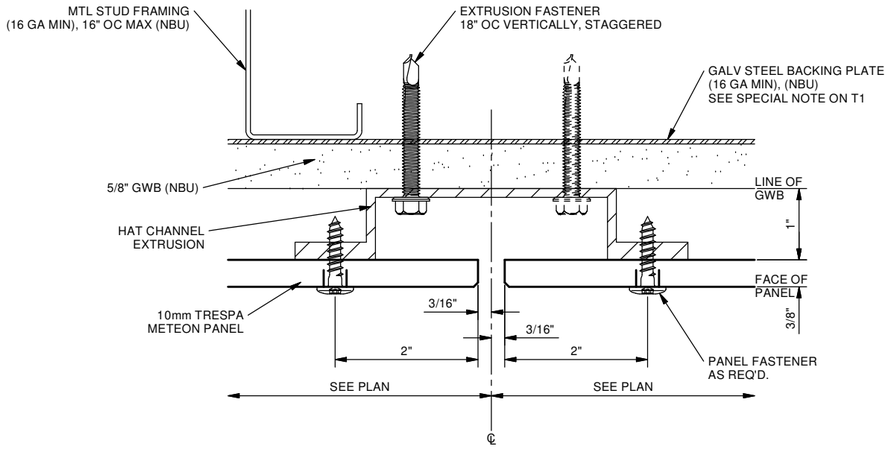

1 D11 VERTICAL 2-PANEL JOINT
SCALE: FULL SIZE

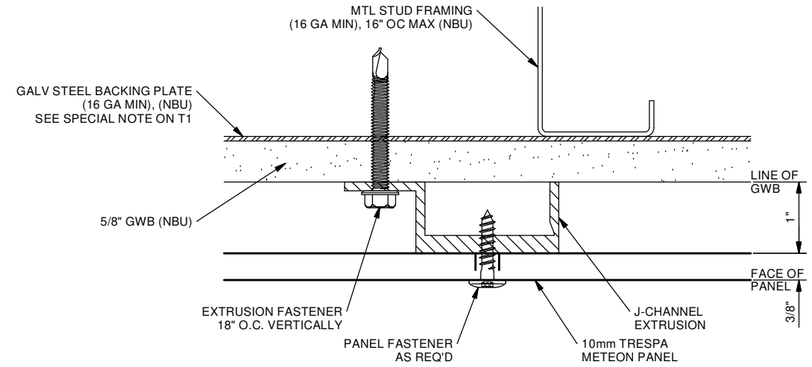

2 D11 VERTICAL MID-PANEL
SCALE: FULL SIZE

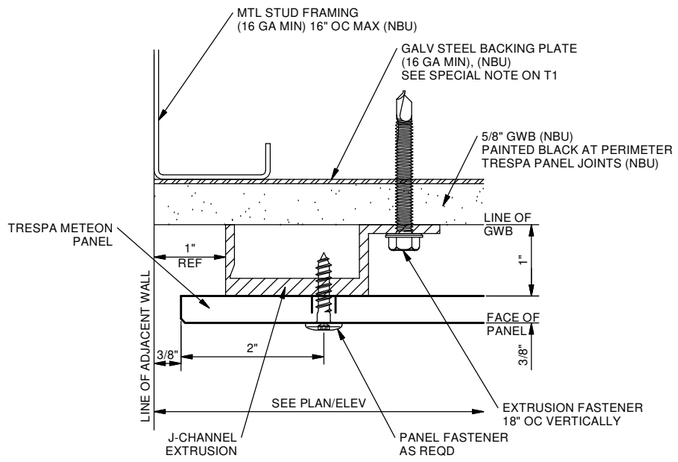

3 D11 PANEL TERMINATION DETAIL
SCALE: FULL SIZE

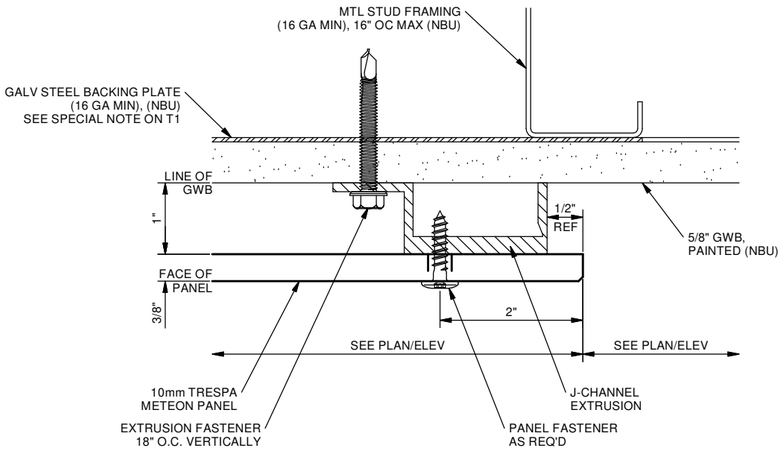

4 D11 PANEL TERMINATION DETAIL
SCALE: FULL SIZE

Rev.	Date	By
	2/25/2014	TR
REVISED PER FIELD DIM W/PART MARKS		
	12/16/2013	CLB
REVISE TO 6" GIRT		
	11/12/2013	CLB
2ND SUBMITTAL SHOP DWGS		
	9/17/2013	CLB
1ST SUBMITTAL SHOP DWGS		

Description

Drawn by CLB

CUSTOMER NAME/LOCATION:
ARCHITECTURAL GLASS & MIRROR
CLIFTON PARK, NY

PROJECT NAME/LOCATION:
SOCHA PLAZA
GLENVILLE, NY

SHEET DESCRIPTION:
FULL SIZE DETAILS
INTERIOR

UNIVERSE CORPORATION
3333 FOERSTER RD.
ST. LOUIS, MO. 63044-3716
PHONE: (800) 989 6550
FAX: (314) 439 2801
www.universecorp.com

THE DRAWING IS THE PROPERTY OF UNIVERSE CORPORATION AND MUST BE RETURNED UPON REQUEST. THIS DRAWING AND THE PANEL SYSTEMS HEREIN DEPICTED MAY NOT BE REPRODUCED WITHOUT WRITTEN PERMISSION FROM UNIVERSE CORPORATION.

PROJECT NUMBER:
2013-06-0488

SHEET NUMBER:
D11